Manuscript Click here to view linked References

3D Maneuverable Solar Retrofittable System

Shashank Hegde[a*], Akshar K R[b]

[a] Department of Electrical and Computer Engineering, Technical University of Munich, Germany

[b] Department of Electric Vehicle Technology, Energy Institute, Bengaluru, India

[*]Corresponding Author at: Technical University of Munich, Arcisstraße 21, Munich, Germany

E-mail addresses: shashank.hegde@tum.de (Shashank Hegde), akshar.kr@gmail.com (Akshar K R)

Abstract

The demand for energy has always been growing, with the world's industries like Electric Vehicle's requiring more electricity. Many of the world's resources for energy are depleting, hence there is a need for efficient and innovative methods to create and maximize power. The local governments have the resources to dramatically reduce their carbon footprint by purchasing or directly generating electricity from the various clean renewable sources. One of the best sources of renewable energy includes solar energy, but solar panels can only utilize about 15-20% of the sun's energy. Hence it is paramount to increase the available solar energy for efficient energy conversion. In the current scenario, piling up of the panels is not possible because the horizontal surface is required to capture all the sun rays for more power. But if we see the ground-level situation in India, electric vehicles are becoming more appealing and affordable, and the energy consumption rate is soaring. Compared to other tier cities of the world, in Indian cities itself the area seems to be less, and population density is relatively high compared to other regions. So effective utilization of energy along with the available space is the need of the hour as we gear ourselves towards the phase of transition towards non-conventional energy.

This paper presents an effective approach towards directing more solar energy towards the panel using a solar concentrating mechanism, which will not only increase the output power, but also reduce the overall cost per unit energy produced in the long term. It will utilize many techniques to increase the solar flux and efficiency, such as solar tracking, reflecting mirrors, concentrators, and cooling methods.

Keywords: Solar flux, Concentrators, Solar radiation capture, Solar tracker, Retrofittable unit, Dynamic solar panels

Abbreviations

INDC - Intended Nationally Determined Contributions
ASEAN – The Association of Southeast Asian Nations
EV- Electric Vehicles
FOS - Factor of Safety
MATLAB- Matrix Laboratory
CAED- Computer Aided Engineering Design

1. Introduction

With the race against time to moderate global warming, the world is investing tremendous capital and resources into renewables, especially solar. About 173,000 terawatts Tera watts of solar radiation reach the earth's surface, which is more than 10,000 times the entire world's energy consumption, and there is a great potential to harness this energy. Just considering India's solar power capacity, it alone multiplied by more than 11 times in the past five years, increasing from 2.6 GW in to 30 GW. At the present, Indian solar tariff is quite competitive, and grid parity has been achieved. The conversion of solar light to electricity is one of the most promising techniques, being completely clean, reliable, having low maintenance, and undergoing continuous research and development for better efficiency. This increase in efficiency has been paramount to the many industries relying in the present and future on the green energy.

With the amount of carbon dioxide emissions increasing with rising global warming, the world needs the switch to convert to renewable energy sources. Many countries are already building huge projects for solar generation, such as India's Intended Nationally Determined Contributions (INDC), which aims at an ambitious target of 40% of total power generation through renewable energy. India also holds one of the world's largest solar parks, and the tropical weather being perfect for solar power generation. Many other aspiring projects like the Australia–ASEAN Power Link are planning to combine the world's largest solar farms through long undersea electricity cables, which will provide areas without proper sunlight the ability to receive solar energy

With the upshift trend in electric vehicles (EV) in the market with reduced battery and EV costs, increase in fuel costs and more environmental conservatives the need for more electrical energy is rising. Solar cars market has also supplemented the solar vehicle market growth, and solar energy is being widespread throughout the masses as a cleaner and greener energy production. As the automobile industry slowly shifts towards electric vehicles, the exceeded requirement of an energy market is on the way to becoming the next research and business hot spot of the future.

Solar energy is being employed in both rural and urban areas, ranging from domestic cooking, as a power source for industries, as a backup power supply, in water heaters, desalination plants and many more. Being a vibrant research topic, solar energy is the third most used renewable form of power, with many aggressive plans to scale its usage in the coming years. But even though it has high initial costs, the maintenance costs are sufficiently low, and with novel techniques, it is possible to increase the solar flux captured, thereby reducing the costs of generation of a unit of power. With recent innovation and efficient techniques like cooling, and high reflective materials that are used to elevate the solar power generated, the costs of solar energy production are coming down year by year.

Our system is aimed to increase the amount of captured solar flux by focusing more of the sun's rays on the existing panels, increasing the amount of solar energy produced per panel. This will benefit the customers as it is designed to be a retrofittable unit, which can be seamlessly integrated into the countless number of existing solar panels around the world, which will increase their output power.

2. Factors Affecting Efficient Solar Energy Production

There are many factors that degrade the amount of output a solar panel generates, and this creates a tremendous sum of power that is wasted. A main issue that affects solar efficiency is solar shading. In many of the standard PV panels, the solar cells will usually be connected in a series type of connection. This results in the same electrical voltage across the solar cells as long as uniform sunlight hits the surface of the PV panel. However, if one among the cells becomes shaded due to some external means, the cell will stop producing electricity and can start behaving as a sort of a semiconductive resistance, strongly decreasing the entire amount of energy produced by the solar array.

Solar Panels decrease by 5% in efficiency for every 25-degree Celsius increase in ambient temperature. In this project, solar flux is increased without changing ambient temperature. So, sun rays will be focused on

a single point without changing the surrounding temperature, maintaining panel efficiency. Another dominant feature is that irrespective of panel efficiency, the implemented architecture will increase the output of the solar panel. Productively, more energy can be generated in a fixed area with this principle. With an increase in the solar intensity, the solar panel output increases, and high relative humidity adversely affects the performance of the photovoltaic cells. In regions with humidity levels above the average range, it is found that there is a decrease in the efficiency due to a minimal layer of water on the top of the solar panel.

One of the main challenges of solar panels is the amount of horizontal space available, for generating more power. Another challenge is the placement of panels, and with the position of the sun changing with the hour, it is essential to track the sun accordingly to increase the solar energy captured. Our system is a retrofittable Flux Based Light Dependent Solar Tracking System, which can efficiently increase solar flux intensity by utilizing both horizontal and vertical space.

3. Factors Available to increase Solar Efficiency

Various practices exist in the market to increase the solar energy generation, with proven results.

1) Wavelength of the light which falls on the panels plays an important role in this aspect, with higher wavelength light being more efficient [1]. Photovoltaic cells are primarily inefficient due to the fact that it utilizes only a small portion of the energy in the solar spectrum.

The photovoltaic cells in the solar panel consist of silicon atoms, and they absorb energy from different wavelengths of light of the visible spectrum. The cell is mixed with impurities to produce both positive and negative charges. The light which is incident on the cells cause the charges to move, which then produces an electric current. With recent innovation in creating solar cells which can absorb solar light from a broader wavelength, the efficiency of the panels will rise.

2) Temperature also plays a major role in the panel output. An increase in temperature will decrease the voltage, and current will increase due to decrease in the band gap of silicon. The open-circuit voltage will also decrease due to an increase in reverse saturation current.

3) Cooling - With an increase in cell surface temperature, the output decreases, and reducing the temperature can increase efficiency.[2] Some of the current researched techniques include using water to cool the surface of the solar panel by adding a tube to the surface of the panel. The PV panels and the solar cells will be cooled by circulating water around, and the warm water which will leave the panels is pumped back to the water tank.

4) Anti-Reflective Coating - Owing to the high refractive index of Silicon, more than 30% of the incident light will be reflected from the surface. So, Anti Reflective Coatings are used to reduce the amount of reflection. The coating is a dielectric thin and transparent film, with an insulating material on the area of the circuit. When the reflection increases, solar energy is wasted, and thermal effects in the solar cell incur, which reduces the power output. The coating will prevent the reflected optical interferences, and materials with high reflectivity perform better.[3]

5) Solar Trackers –The photovoltaic panel orientation is an important factor to consider for energy related measurements. Most of the current installed solar panels are in a fixed position, so they must face the South with the inclination at an optimum angle to receive maximum power. Hence, solar trackers can be used to dynamically change the position of the panels according to the sun's movements. They are electromechanical devices that make solar panels follow the sun's path as the day progresses. Single-axis solar trackers tracks the sun in one direction only, in one plane. Dual-axis trackers rotate on two planes, in both the X and Y axes, which enable the system to track the sun more efficiently. The trackers can be programmed to move in different conditions, as in harsh winds, cold climates, various altitudes, and

geographic locations. Using solar trackers can increase the electricity production by around 33%, as much more sunlight is incident directly on the panels depending on the sun's position at the time of day. [4]

6) Bypass Diodes – Shading is another issue which reduces the current produced by the panel. In an array of solar cells, if a single solar cell is shaded, the current produced by all the units in the panel is effectively the unit which generates the least current. By shading a cell, the whole series in the panel is virtually shaded too. This leads to bypass diodes being installed in the system to prevent the loss of energy. Normally every cell in the panel is under a forward bias. But with the bypass diode being in reverse bias, it leads the circuit to be open. But if a solar cell is reverse biased due to a current mismatch or shading effects, the effective current from only the proper conducting cells are received in the external circuit, as the bypass diode will help to conduct the current through it. Hence, when any solar cell is shaded, a current path is established by the bypass diode which provides the connected solar cells to produce energy at a lower voltage. [5]

4. Literature Survey

In the work by Rizwan Arshad et al. [6] concentrated photovoltaics are used with mirrors and lenses to reflect sunlight onto solar cells. With this technique, increasing solar panel efficiency using mirrors is one the method observed, where cooling of the panels is given priority along with the mirrors, as these mirrors will concentrate the power on the panels at every moment of its operation. Thus, exchange of heat is required so that heat is radiated to the environment with this cooling system. We have seen in several supporting documents that cooling of the PV arrays while generating electricity will improve the efficiency, and the same concept is implemented to show the efficiency improvement of the panels with conventional solar panel setup. And the same obtained results are tabulated to show the margin in difference of the output.

In the paper by Daniel Tudor Cotfas and Petru Adrian Cotfas [7], few methods of increasing the amount of electricity supplied by photovoltaic panels are presented. One of the methods which is widely used to increase the efficiency of the panel is to apply white paint on the surface of the panels. The main reason is that white colour reflects maximum sunrays which falls on them and by this surface temperature of the panel is reduced, and we have seen in this literature survey that increase in ambient temperature reduces the overall efficiency of the panels. So, by considering above factors as well as cost effective method, white pint is applied to increase the efficiency of the panels but only marginal change is observed by doing this method. Another advantage of this method is to keep the supporting surface moisture free from the inside because, usually cement structure absorbs water and the iron rods inside tend to get corroded, but if you paint the surface then the chance of corrosion is low compared to an exposed cement surface. This method of increasing solar panel efficiency has relatively less benefits compared to increasing the solar panel output using our proposed method of increasing the intake solar flux.

Dinesh Rana et al. In their work [8] simulated a simple microcontroller based solar tracking system with an actuator. The experiment proposed in tracking and rotating the mirrors and panel to achieve the right angle to be incident to the sun rays for maximum efficiency. The approach showed that a controller based solar tracking system had an increased efficiency by a significant amount compared to a fixed PV module. Servo motors were used to maneuver the system, with light dependent resistors to calculate the sunlight intensity. It was established that reflectors and concentrators were increasing the efficiency on a basic level, which is used as a reference in our paper.

In the work by Maan Jenan Basheer Buni [9], the Tilt Angle of the solar photovoltaic cell is researched to find its performance effects. The solar rays angle falling on the solar cells changes with the progression of the day, the month and location. Specifically, the paper showed that more solar radiation falls on a solar cell when its face is precisely orthogonal to the plane of the radiation, and this depends on the angle of tilt of the cell. The cell performance is impacted by varying tilt angles from the ideal value due to visual and engineering effects. Results showed that the best value of the generated power in the early morning and near the sunset was at a 40-degree while at a greater angle of inclination of 60 degrees, the best productivity

of the cell was observed. This angle will be dependent however on the location of the solar farm, and each region will be requiring a different inclination angle, depending on the season and hemisphere.

5. Related Analysis

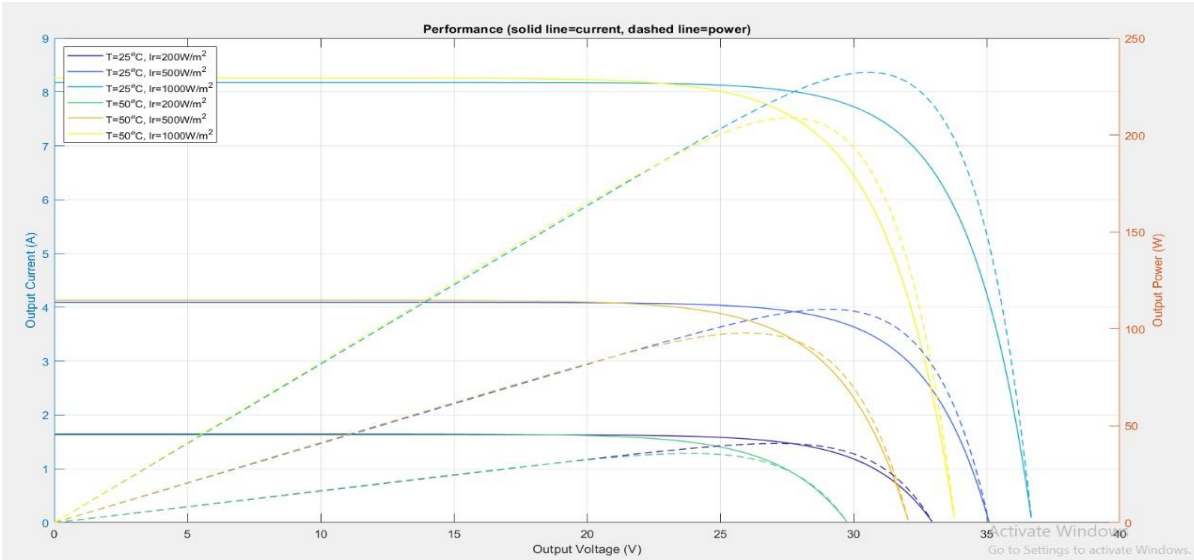

Fig.1: Plot of current and power for various irradiance and cell temperatures

The plot shows current and power as a function of voltage for various irradiance and cell temperatures. It can be clearly recognized that as the temperature rises, the output power decreases as a result of the panel inefficiency at higher temperatures. If the datasheet includes a plot like this, then it can be used to validate correct parameterization of the Solar Cell block. The table below shows the values of maximum power obtained for various irradiance and cell temperatures, according to the plot.

Table 1
Maximum power operating points

Panel Irradiance	**Cell Temperature**	**Maximum Current**	**Maximum Voltage**	**Maximum Power**
200	25	1.5067	27.11	40.847
500	25	3.7887	29.066	110.12
1000	25	7.6059	30.557	232.41
200	50	1.4954	23.88	35.712
500	50	3.7665	25.992	97.899
1000	50	7.5762	27.576	208.92

The material of the concentrator greatly affects the amount of sunlight being directed to the panels. This depends on the reflectivity of the material, and a material with higher reflectivity will assist in reflecting more sunlight towards the solar cells. The concentrators are protected using a protective sheet of glass or plastic, and as the solar light passes through the concentrator, some solar rays get absorbed. This absorption of the solar radiation by the protective sheet can reduce the solar energy which is transferred to the panels. Another issue is that the dust particles could scatter solar radiation from the receiver, and also be partly absorbed by the dust particles on the concentrator surface. It is recommended to choose materials with high

reflectivity, like aluminum and silver which have been used since long times as efficient mirror concentrators.

Table 2
Concentrator reflectivity for various materials

Material	Reflectivity (%)
Stainless Steel	67
Iron Sheet	87
Aluminum	92
Silver	96

The angle of incidence of the sunlight is also highly important for the higher power generation from the panels. This angle of incidence is dependent on many factors such as the time of day, season and latitude and longitude, and will not be constant for every location. For example, the fact that India is in the northern hemisphere means that its solar panels will face south. In India, the average radiation is higher in March, April, and May. Many other parameters such as cloud, dust, rain and aerosols also have affected the final power output. Based on various studies, it is evident that the effect of relative humidity also had a major impact on the electrical output through solar energy.

Vertical solar panels are being increasingly common recently in cities with the amount of horizontal space being encroached and diluted. This has its own merits and demerits, as a vertical solar panel can capture more sunlight during low winter sun, but not during the summer. With the position of the sun being higher in the sky during the summer, most of the solar rays do not fall on the panels which lead to less power output. The solution is a dynamic and maneuverable system which can operate in both the horizontal and vertical axes.

6. Methodology

In this system, conventional panels are made to plug with a 3D manoeuvrable tracking system by simple screwing mechanisms. Where telescopic actuator/fork is placed in both X&Y axis of the panels with a single joint thereby holding the unit in specified space.

1) Concentrators having more partial reflecting materials are utilized, and later they are integrated with the telescopic unit as shown in the Computer Aided Design (CAD) diagram.

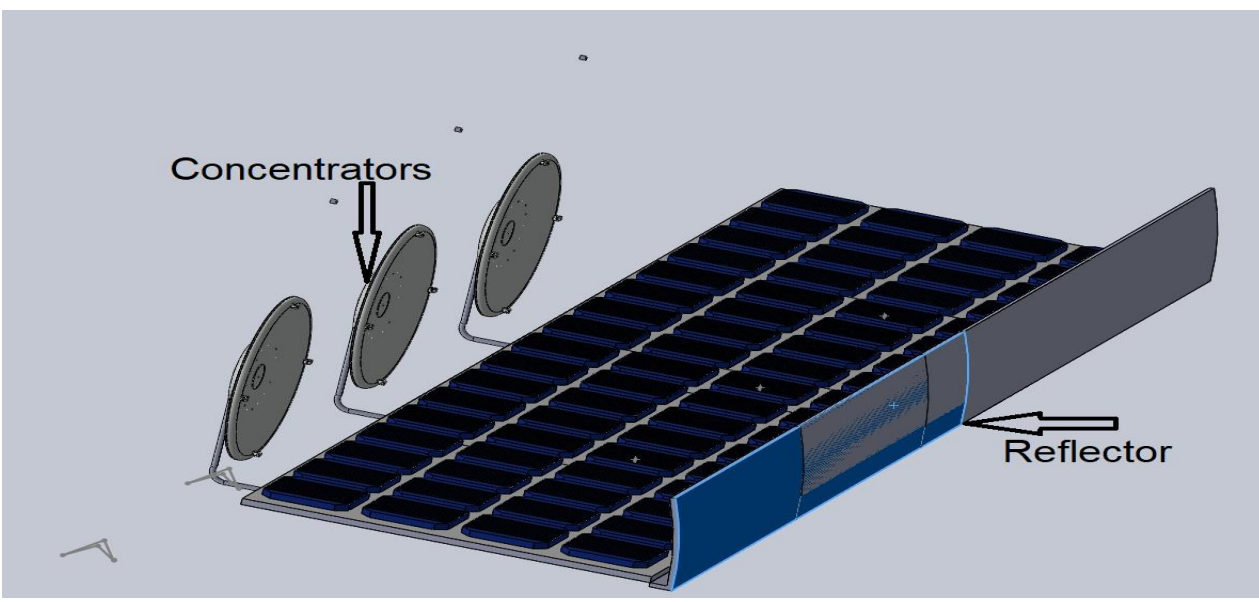

Fig. 2: A CAD based design describing the basic system architecture

2) Auxiliary Battery Source is integrated with the microcontroller unit as it will get recharged along with the main battery source through Solar Energy. This battery unit will support the system to align itself with the maximum flux density available in both vertical and horizontal axes through phototransistor and real time flux estimation.
3) 12 Volt source will be sufficient to drive the actuators/fork in a single axis at a time through servo motors where multiple steps in positioning are possible, with the minimum number of intervals between the sequential positions arranged such that the system aligns itself to increase the flux density. Load on each servo unit will be less than 2kg as reflectors are of aluminium alloy structure to support the reflecting material.
4) In a Photovoltaic array, low flux density is observed and sequential actuation of the actuators progressively takes place to balance the flux density on every area of the panel to draw maximum output power.
5) This system is programmed to reach its base position, which is X=0 &Y=0 on the axis whenever severe rain or wind is observed through pressure and rain sensor to increase the FOS (Factor of Safety) of the system, and to increase the product life cycle.
6) In this working procedure, the X-axis is the horizontal area restriction and can be set according to the requirement, otherwise, the existing system itself sets its target in both the axes. Proximity is observed in both the axes movement.
7) This system works in the above sequence, irrespective of the panel size. Scaling of this system is available to make it feasible according to different capacities

7. Mathematical model of 3-Dimensional Maneuverable System

8.1 Emulating concentrators as a gain function in Simulink

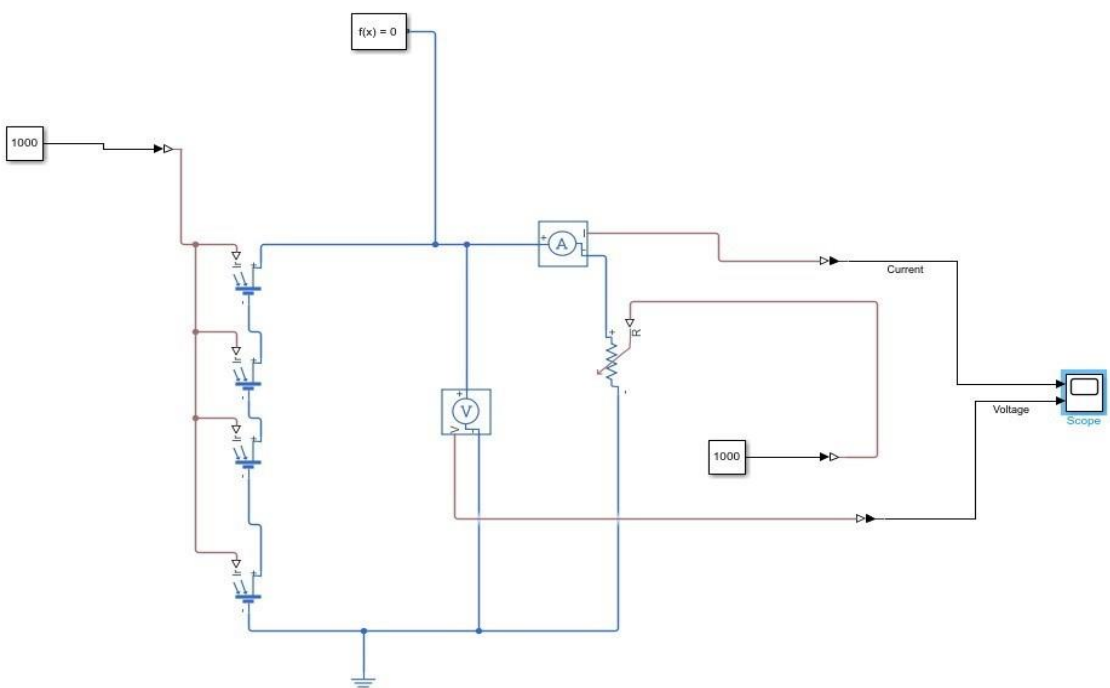

Fig. 3: Using gain functions in Simulink to represent the effect of concentrators

The above figure represents the mathematical simulation of the actual prototype where existing solar cells are used, and sun rays are made to fall on these panels using concentrators and reflectors. For the

demonstration, irradiance is given directly to the cells by using a physical to Simulink converter where marginal variations are observed with respect to the actual system. W/m2 is the defined unit in which the input signal is given to this mathematical model. The sun is considered as a single source of power on all the photovoltaic arrays, and this is considered as an ideal situation where there is no shadow or other type of disturbances for the solar energy to fall on the panels. So, a single source is converted using Simulink to a physical converter and is made to fall on the PV arrays in a series pattern, so that irradiance along the arrays will be uniform. From the same series-connected PV arrays output is taken and observed in the scope for the given irradiance value. The irradiance input is given through a constant block in the MATLAB Simulink system, where this constant block is later converted to a physical signal using Simulink to Physical Converter and made to fall on the PV cells.

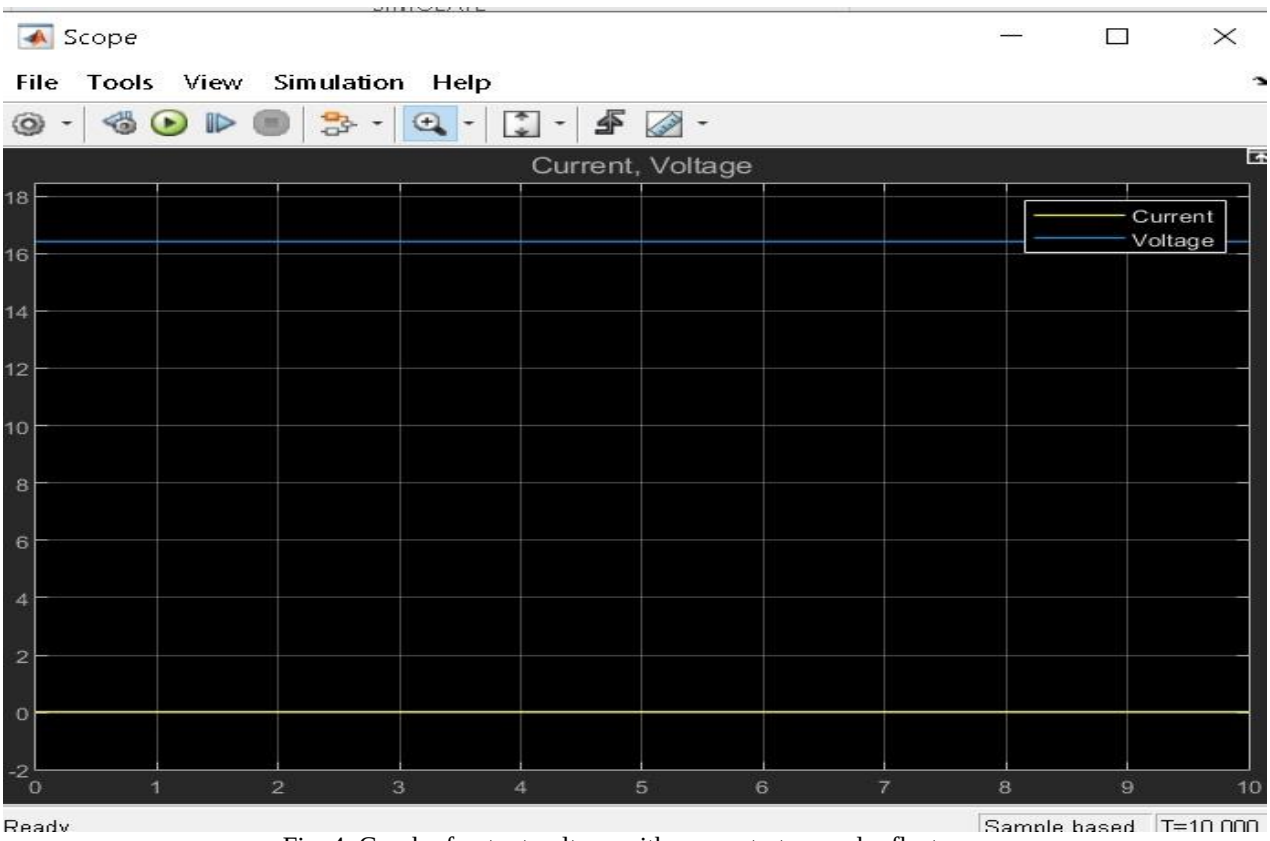

Fig. 4: Graph of output voltage with concentrators and reflectors

As shown in the above figure, using concentrators and reflectors will increase the voltage and power level of the solar panels significantly. With many series panels connected together, this device can increase the power supply by many folds.

8.2 A system with non-uniform angle of incidence from sunlight modeled using Simulink

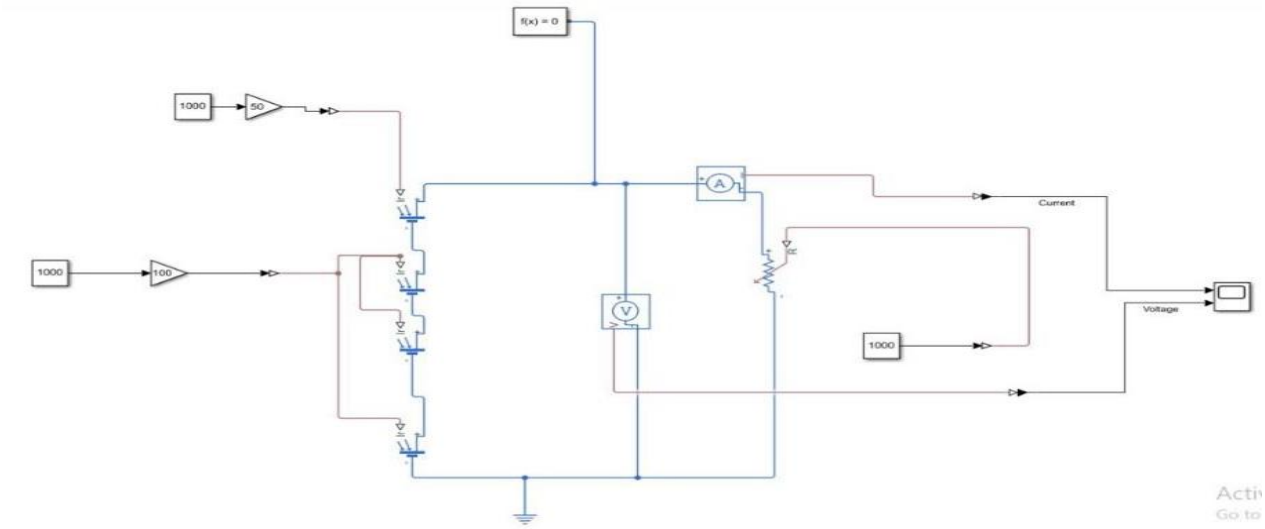

Fig. 5: A system with non-uniform sunlight falling on the solar panels

In the above Photo Voltaic array, cells are observed with different irradiance depending on its sequence of positioning. In practical situations, all the cells may not receive the same irradiance due to positioning and shading, which is illustrated in the figure. The bottom 3 cells are receiving a higher gain, with the upper solar cell receiving a lower gain. This represents the concept that the upper cell is receiving less solar irradiance, either due to shading, partial reflection or other inefficiencies which will reduce the overall power output of the system.

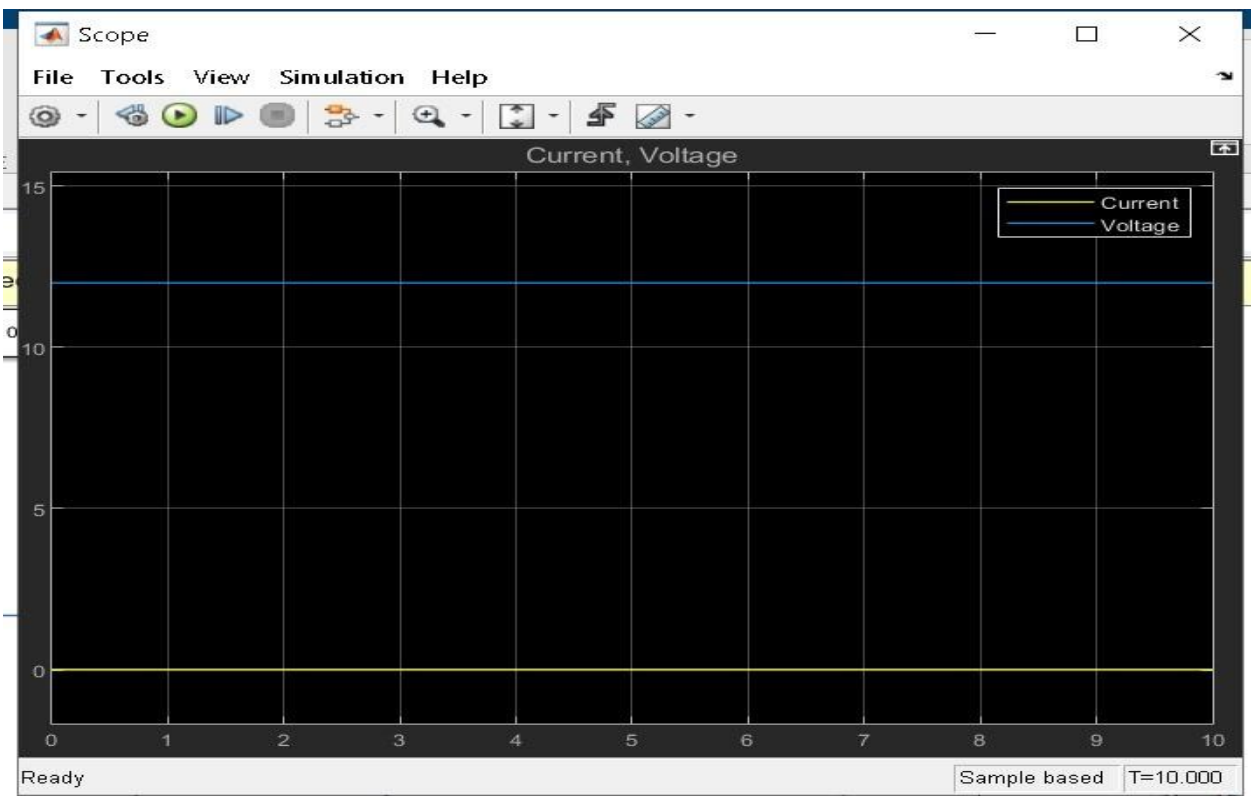

Fig. 6: Reduced output due to decreased solar flux on one cell

In this illustration, the gain function represents the 3D Maneuverable system. Where same irradiance generated but some Photo Voltaic cells might not be able to utilize the energy due to change in angle of

incidence of the signal or due to space constraints. But after retrofitting with existing model, we can observe that output is raised by clear margin there by increasing the overall efficiency of the system. In this Mathematical model Gain function work similar to the designed 3D as both systems will not only amplify the signal but able to capture the signal in outreach conditions which is the important factor where vertical axis positioning helps to increase the flux density thereby increasing the total power output.

8. Conclusion

The system that is designed is an extension to the existing solar panels already deployed in the world. The aim of the prototype is to increase the solar flux falling on the panels and utilize the area of the deployed panels effectively, by capturing maximum solar radiation onto the panels. The concentrators and reflectors with high reflectivity will further aid in maximizing the solar rays falling on the panels. The angle of incidence is calculated based on the position and time of day, which is optimized from the solar tracking system. It will track the sun based on its position to tilt the panels using the inbuilt motors embedded onto the system. Our system is designed to be easily pluggable in any solar generating system, which will significantly reduce the costs of the system with its solar tracking system and concentrators to create a jump in the energy production. Overall, the project will increase the output by directing the sunlight from surrounding areas onto the panels and reduce the need for the amount of area occupied by the panels by generating more energy for less horizontal space.

9. Future Scope

The unit can be used as a commercial product, which can be easily fitted into the numerous panels. In terms of product, we can upscale it in existing systems for better scalability and make the system more effective through research. The same concept can also be integrated into the many other applications of solar energy such as solar water heaters to increase the temperature of the water. With the retrofittable system containing the concentrator, more solar flux concentrated in an area of the water heater can increase the temperature at the focal point to higher values rapidly. With the increase in electric vehicle markets, this system can be integrated into the energy production units for seamless retrofitting to the panels thereby supplying increased power.

10. References

[1] Dr. M. Narendra Kumar, Dr. H.S. Saini, Dr. K.S.R. Anjaneyulu, Mr. Kuldip S. Solar Power Analysis Based on Light Intensity, The International Journal of Engineering and Science, (p): 2319 – 1805

[2] Aram Mohammed Ahmed, Dr. Suad Hassan D. Efficiency improvement for solar cells panels by cooling, 2nd International Conference for Engineering, Technology and Science of Al-Kitab University

[3] Kumaragurubaran B, Anandhi S. Reduction of Reflection Losses in Solar cell Using Anti Reflective Coating, International Conference on Computation of Power, Energy, Information and Communication,

[4] Anshul Awasthi, Akash Kumar Shukla, Murali Manohar S.R, Chandrakant Dondariya, K.N. Shukla, Deepak Porwal, Geetam R. Review on sun tracking technology in solar PV system, Energy Reports 6 (2020), Published by Elsevier Ltd

[5] Fadliondi, Budiyanto, Haris I. Bypass Diodes for Improving Solar Panel Performance, International Journal of Electrical and Computer Engineering, Vol.8, No. 5, pp. 2703-2708

[6] Rizwan Arshad, Salman Tariq, Muhammad Umair Niaz, Mohsin J. Improvement in Solar Panel Efficiency Using Solar Concentration by Simple Mirrors and by Cooling, International Conference on Robotics and Emerging Allied Technologies in Engineering

[7] Daniel Tudor Cotfas and Petru Adrian C. A. Simple Method to Increase the Amount of Energy Produced by the Photovoltaic Panels, International Journal of Photoenergy

[8] Dinesh Rana, Gourav Kumar, Atma Ram G. Increasing the Output Power and Efficiency of Solar Panel by Using Concentrator Photovoltaic (CPV) and Low-Cost Solar Tracker, International Conference on Computational Intelligence and Communication Technology (CICT 2018)

[9] Maan Jenan Basheer B. The Impact of Solar Photovoltaic Cell Tilt Angle on Its Performance, Worldwide Journal of Multidisciplinary Research and Development.

[10] Moon Keun Kim, Khalid Osman Abdulkadir, Jiying Liu, Joon-Ho Choi and Huiqing W. Optimal Design Strategy of a Solar Reflector Combining Photovoltaic Panels to Improve Electricity Output: A Case Study in Calgary, Canada, Licensee MDPI, Basel, Switzerland

[11] Wujun Wang, Wangzhong Mu, Fei Ye, Silvia Trevisan, Joydeep Dutta, Björn L. Solar selective reflector materials: Another option for enhancing the efficiency of the high-temperature solar receivers/reactors, Solar Energy Materials and Solar Cells, Volume 224, 1 June 2021, 110995

[12] Armstrong O. Njok, Julie C. O. The Effect of Relative Humidity and Temperature on Polycrystalline Solar Panels Installed Close to a River, Physical Science International Journal, 1-11

[13] Rosnani Affandi, Chin Kim Gan, Mohd Ruddin Ab G. The influence of concentrator size, reflective material and solar irradiance to the Parabolic Dish heat transfer, Indian Journal of Science and Technology

[14] Kaveri Markam, K. S. Estimation of optimal tilt angle for solar photovoltaic installations in India, International Research Journal of Engineering and Technology l 19 (2016) 1826–1835

Highlights

- A mechanism directing more solar energy towards the panel using a solar concentrating device.
- Utilizes techniques to increase the solar flux and efficiency.
- The design benefits the customers as a retrofittable unit to existing solar panels
- Effective use of deployed solar panel area, by capturing maximum solar radiation

Table 1
Maximum power operating points

Panel Irradiance	Cell Temperature	Maximum Current	Maximum Voltage	Maximum Power
200	25	1.5067	27.11	40.847
500	25	3.7887	29.066	110.12
1000	25	7.6059	30.557	232.41
200	50	1.4954	23.88	35.712
500	50	3.7665	25.992	97.899
1000	50	7.5762	27.576	208.92

Table 2
Concentrator reflectivity for various materials

Material	Reflectivity (%)
Stainless Steel	67
Iron Sheet	87
Aluminum	92
Silver	96

Figure 1

Click here to access/download;Figure(s);Picture 1.jpg

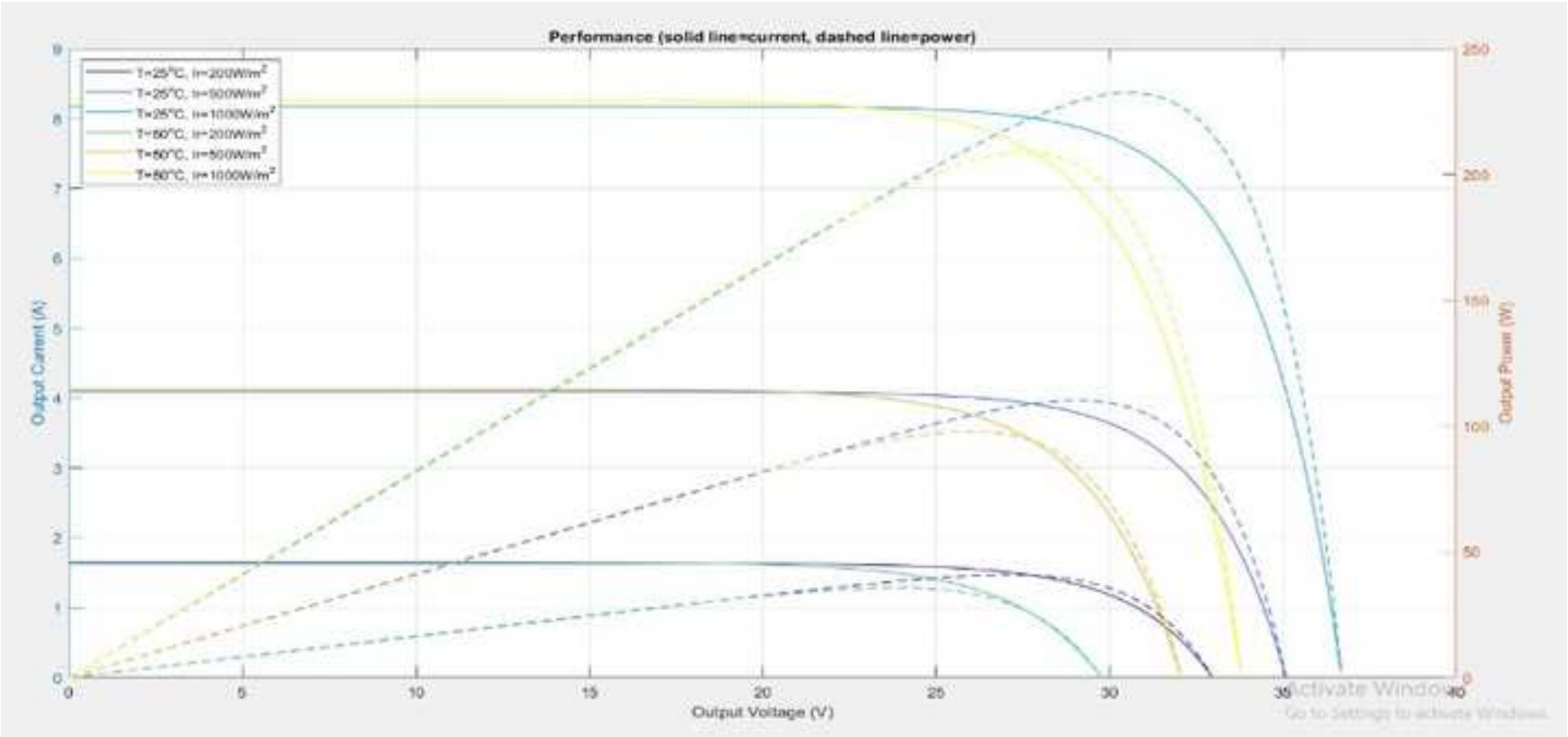

Figure 2

Click here to access/download;Figure(s);Figure2.jpg

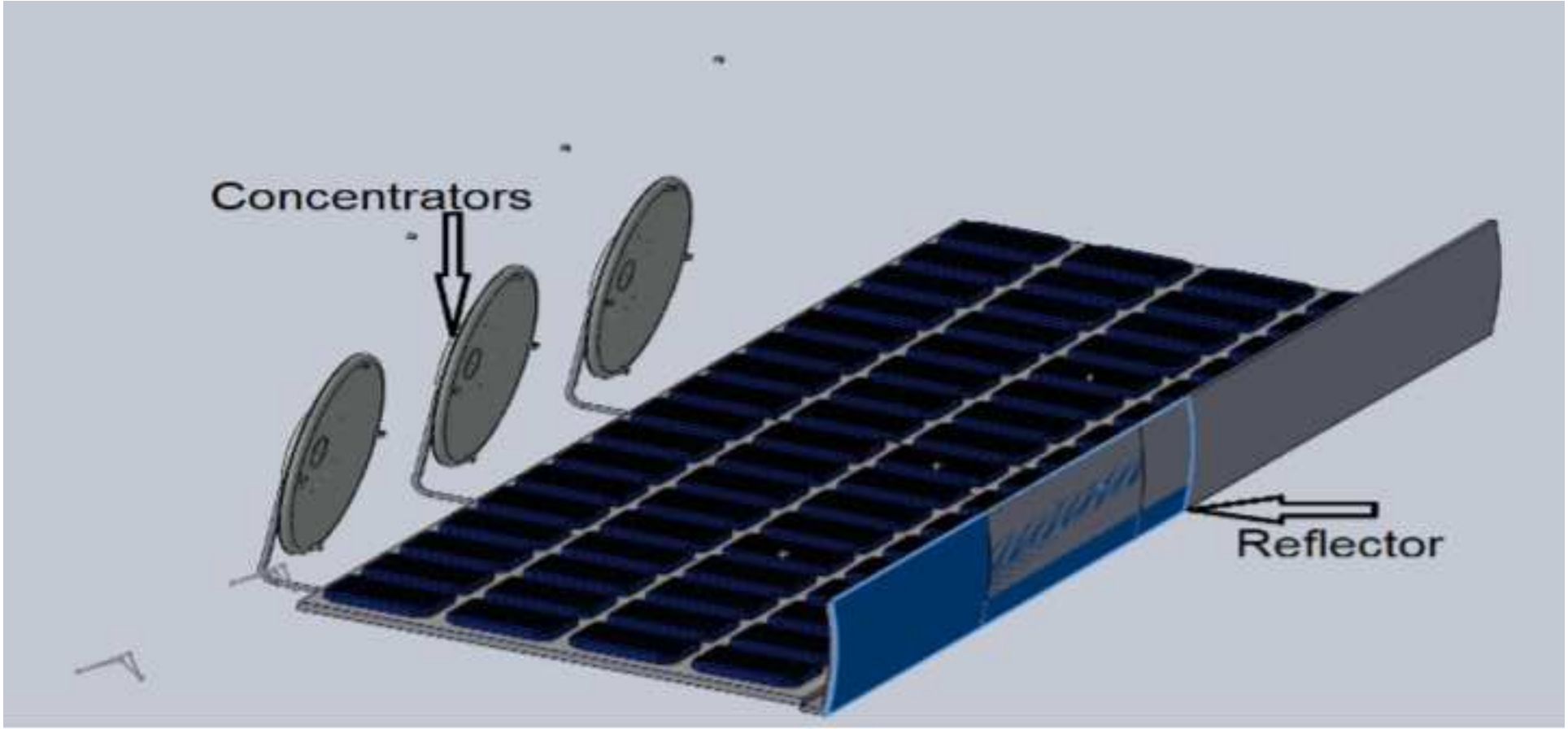

Figure 3

Click here to access/download;Figure(s);Figure3.jpg

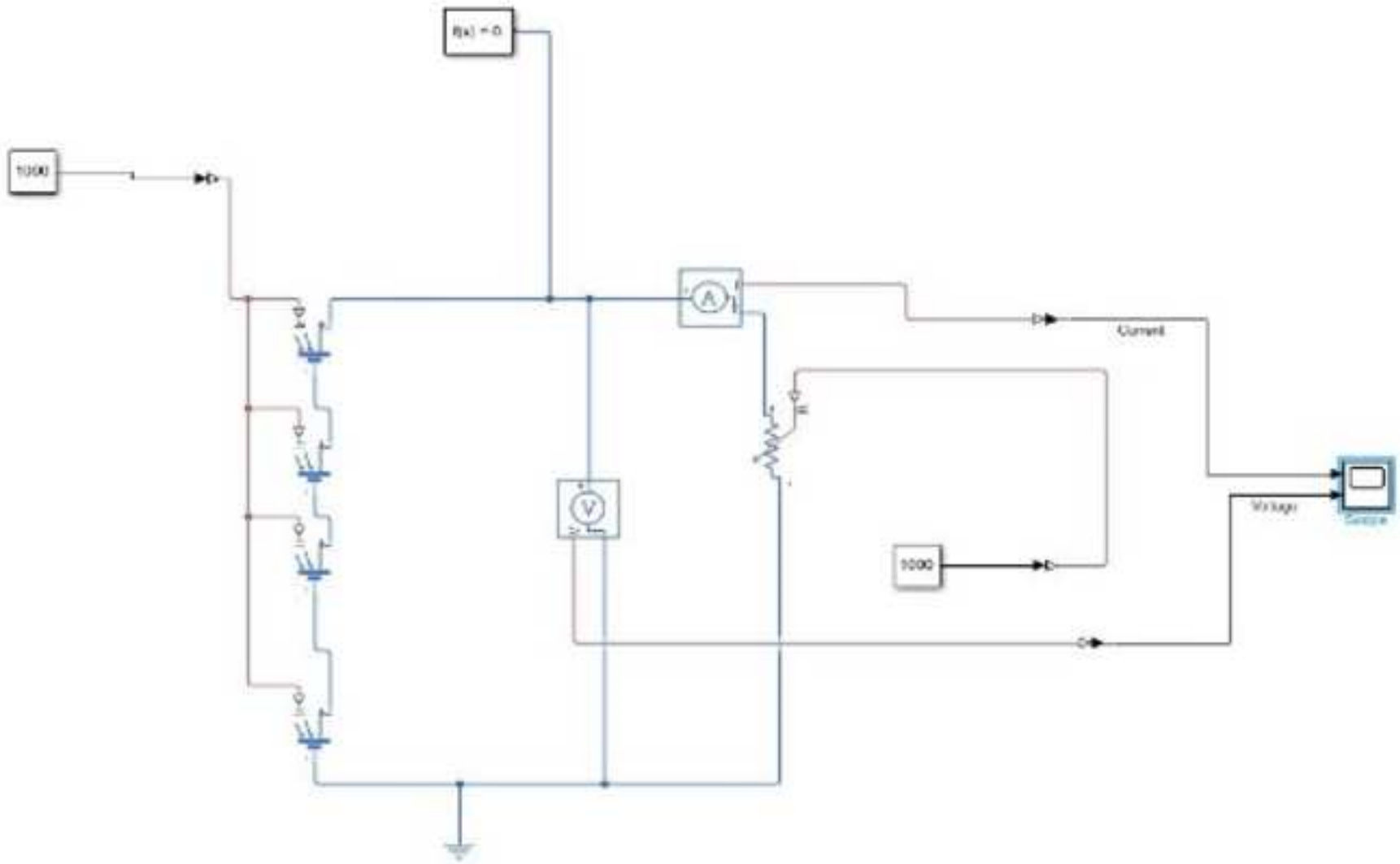

Figure 4

Click here to access/download;Figure(s);Figure4.jpg

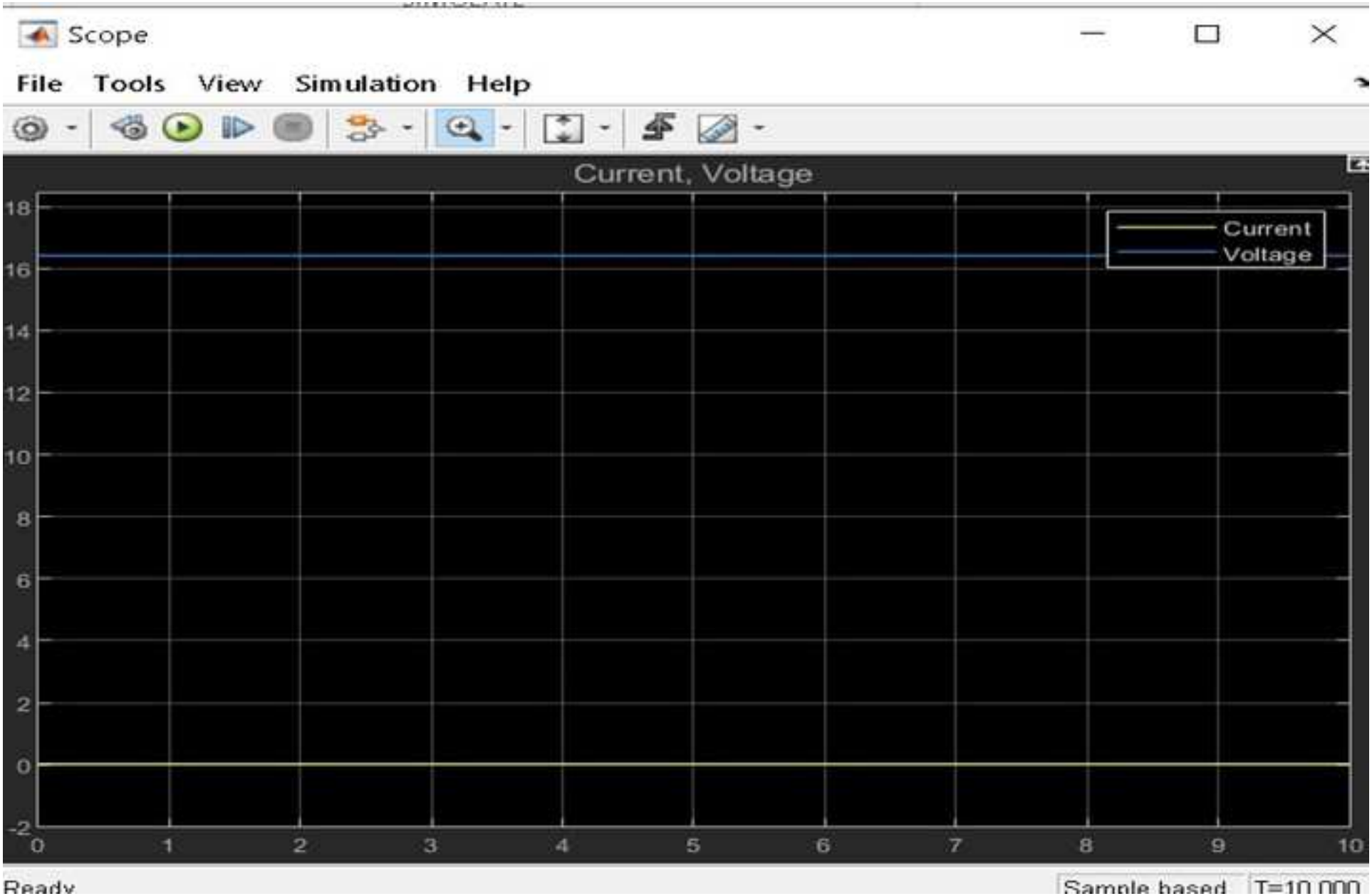

Figure 5

Click here to access/download;Figure(s);Figure5.jpg

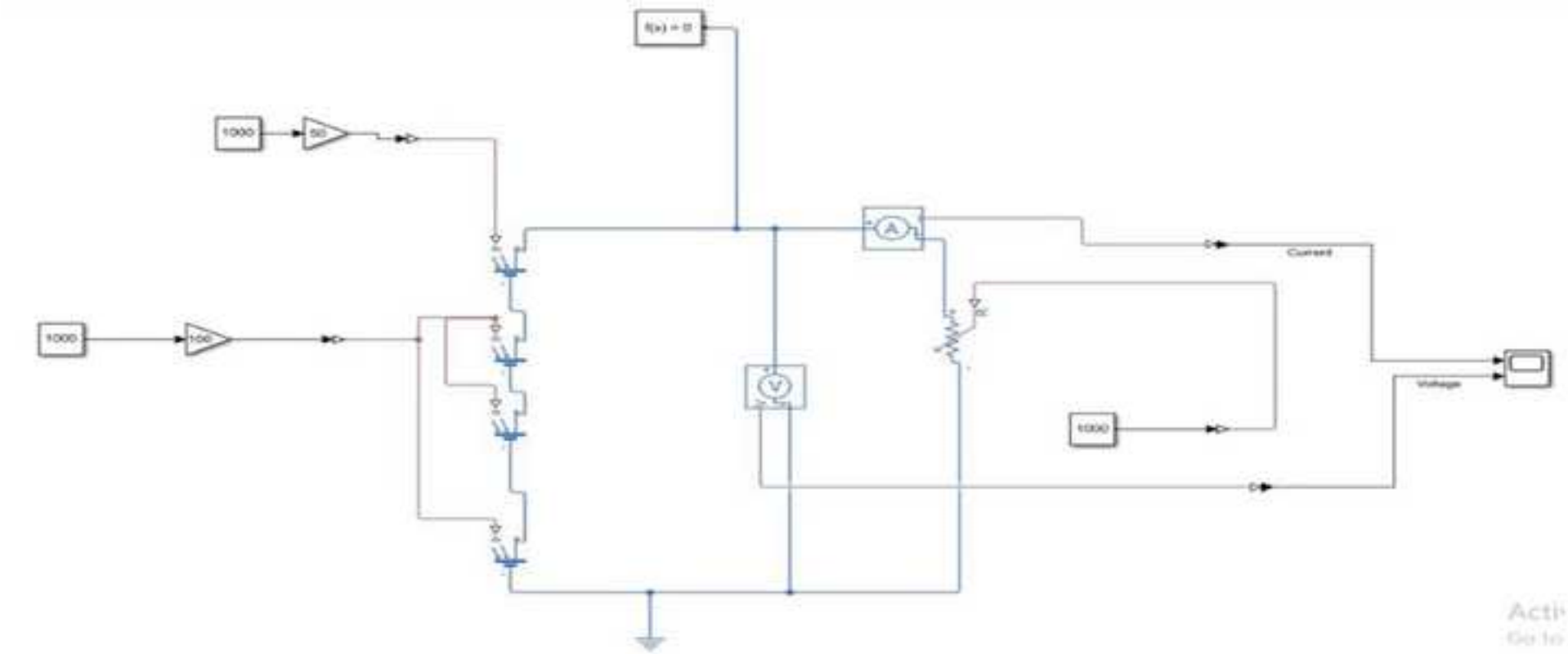

Figure 6

Click here to access/download;Figure(s);Figure6.jpg

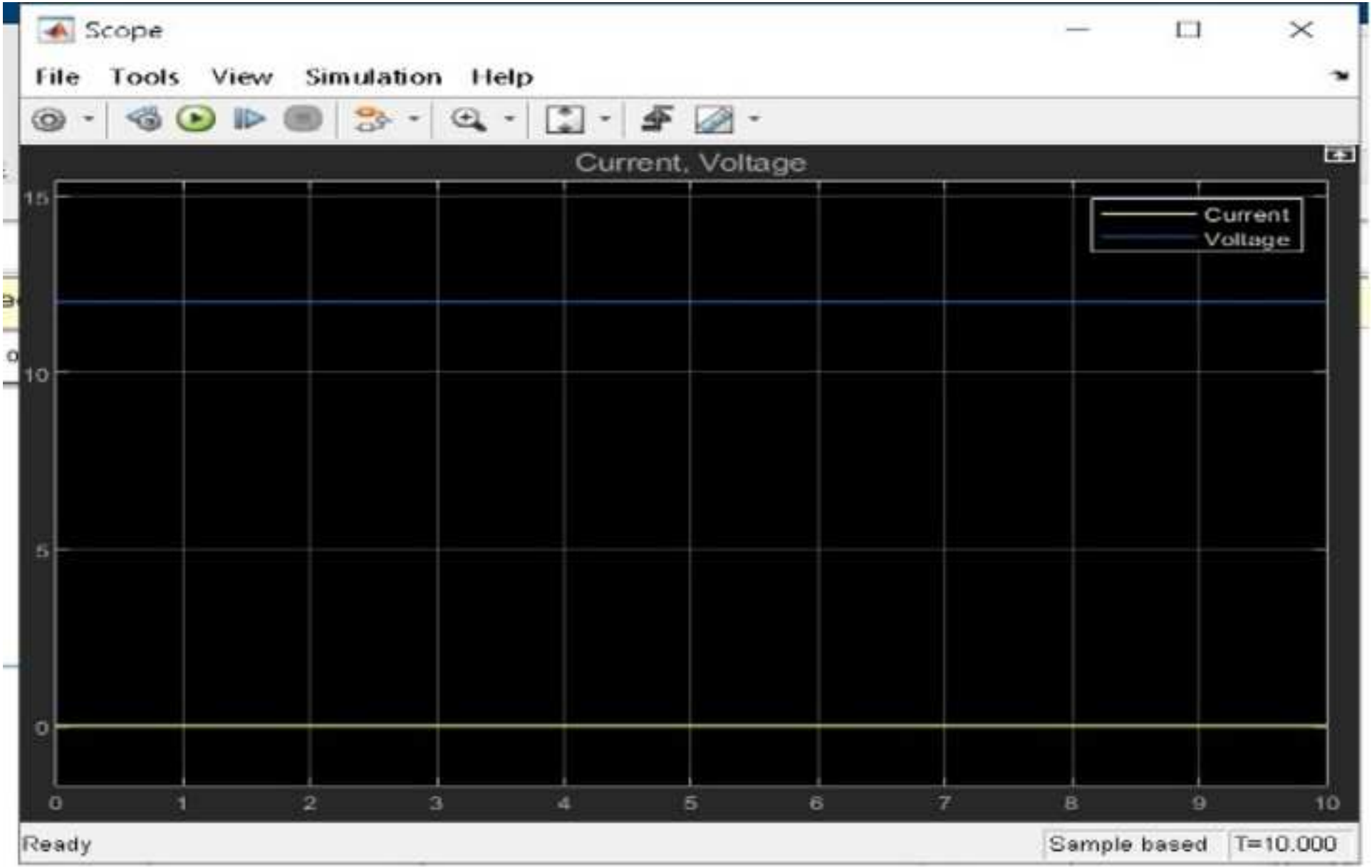

Declaration of interests

☒ The authors declare that they have no known competing financial interests or personal relationships that could have appeared to influence the work reported in this paper.

☐ The authors declare the following financial interests/personal relationships which may be considered as potential competing interests: