Architecture (ex. ARC)

Exercises Computer Architecture

1 Architecture

1.1 Stack-Architecture

Evaluate the expression $\frac{(a+bc)}{(a+dc-e)}$ using a stack-based processor evaluation stack.

a) Write pseudo code of the calculation.

b) How many direct and indirect memory references are needed in case of an infinite stacksize?

c) How many direct and indirect memory references are needed in case of a stacksize of 2?

1.2 Stack-Architecture

Evaluate the expression $\frac{(a+b)^2}{\pi} * (a+b+c)$ using a stack-based processor evaluation stack.

a) Write pseudo code of the calculation.

b) How many direct and indirect memory references are needed in case of a stacksize of 4?

c) How many direct and indirect memory references are needed in case of a stacksize of 3?

d) How many direct and indirect memory references are needed in case of a stacksize of 2?

2 Single-Cycle RISC-V

2.1 Single-Cycle Processor Operation

Determine the values of the control signals and the portions of the datapath that are used when executing an **and** instruction. Draw directly on the image the inner workings of the processor.

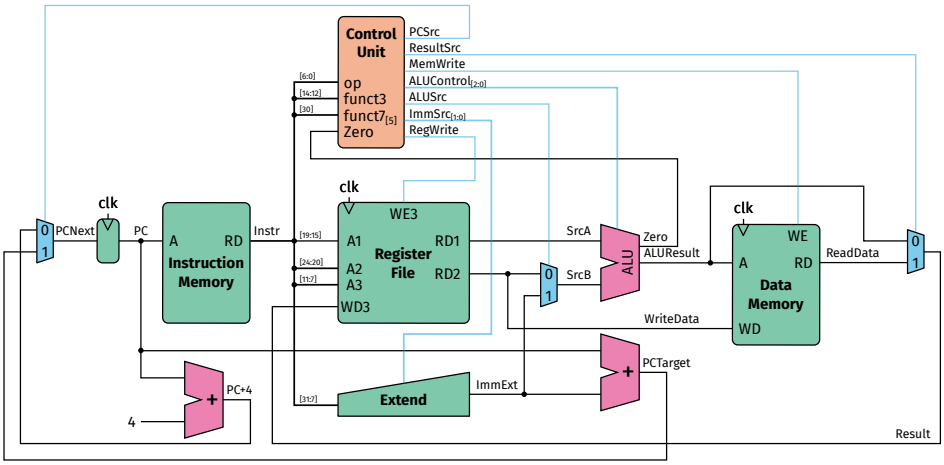

2.2 Extend Single Cycle with instruction `jal`

Show how to change the given RISC-V single-cycle processor to support the jump and link **`jal`** instruction. **`jal`** writes $PC+4$ to rd and changes the PC to the jump target address $PC+imm$.

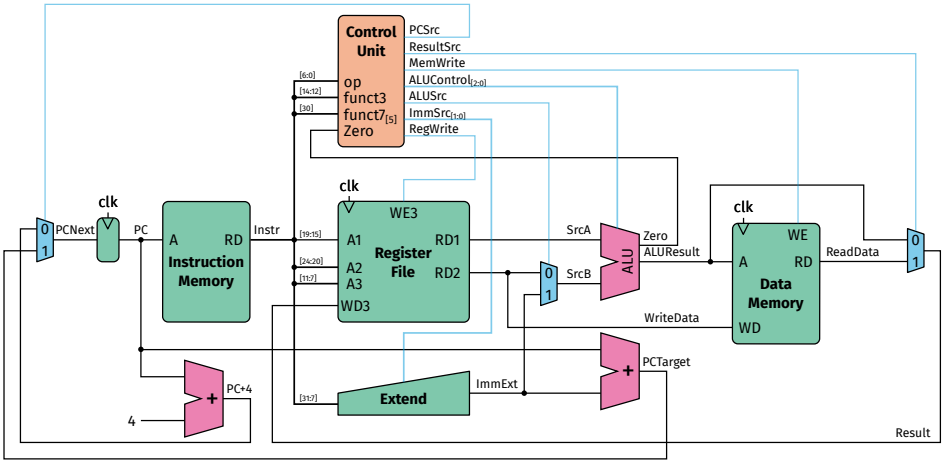

2.3 Single Cycle Processor Performance

A processor build with a 7-nm CMOS manufacturing process has the following timing characteristics.

Element	Parameter	Delay(ps)	
Register clk-to-Q	t_{pcq}	40	
	t_{pcq}	40	
	t_{setup}	50	
	t_{mux}	30	
	t_{AND_OR}	20	Delay of circuit elements
	t_{ALU}	120	
	t_{dec}	25	
	t_{ext}	35	
	t_{mem}	200	
	t_{RFread}	100	
	$t_{RFSetup}$	60	