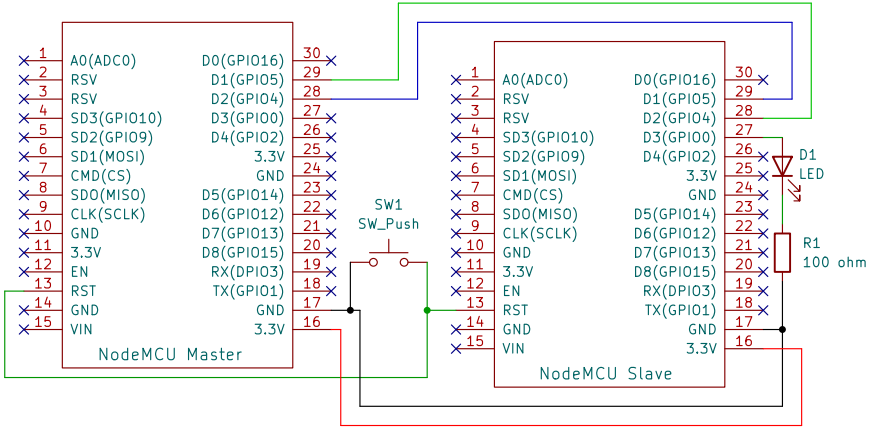

Sheet: /
File: esp-Schematics.kicad_sch

Title: Captive Portal Dual ESP Version

Size: A5	Date: 2024-06-30	**Rev: 1**
KiCad E.D.A. 8.0.3		Id: 1/1