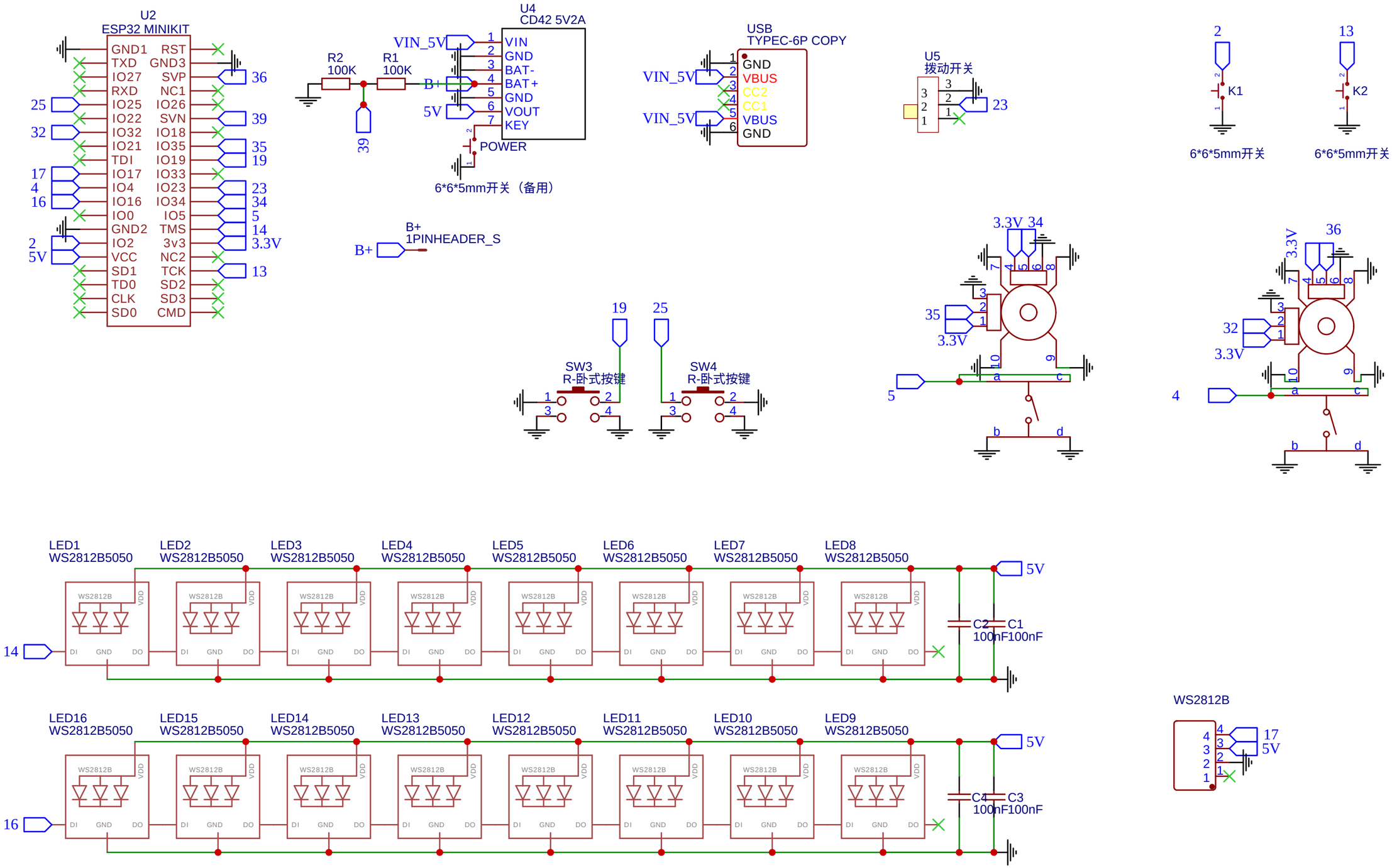

TITLE: 驭风ESP-Mini遥控器_Pro	REV: 2.0
立创EDA	Company: 驭风
	Sheet: 1/1
	Date: 2022-04-15 Drawn By: Saturn圣骑士