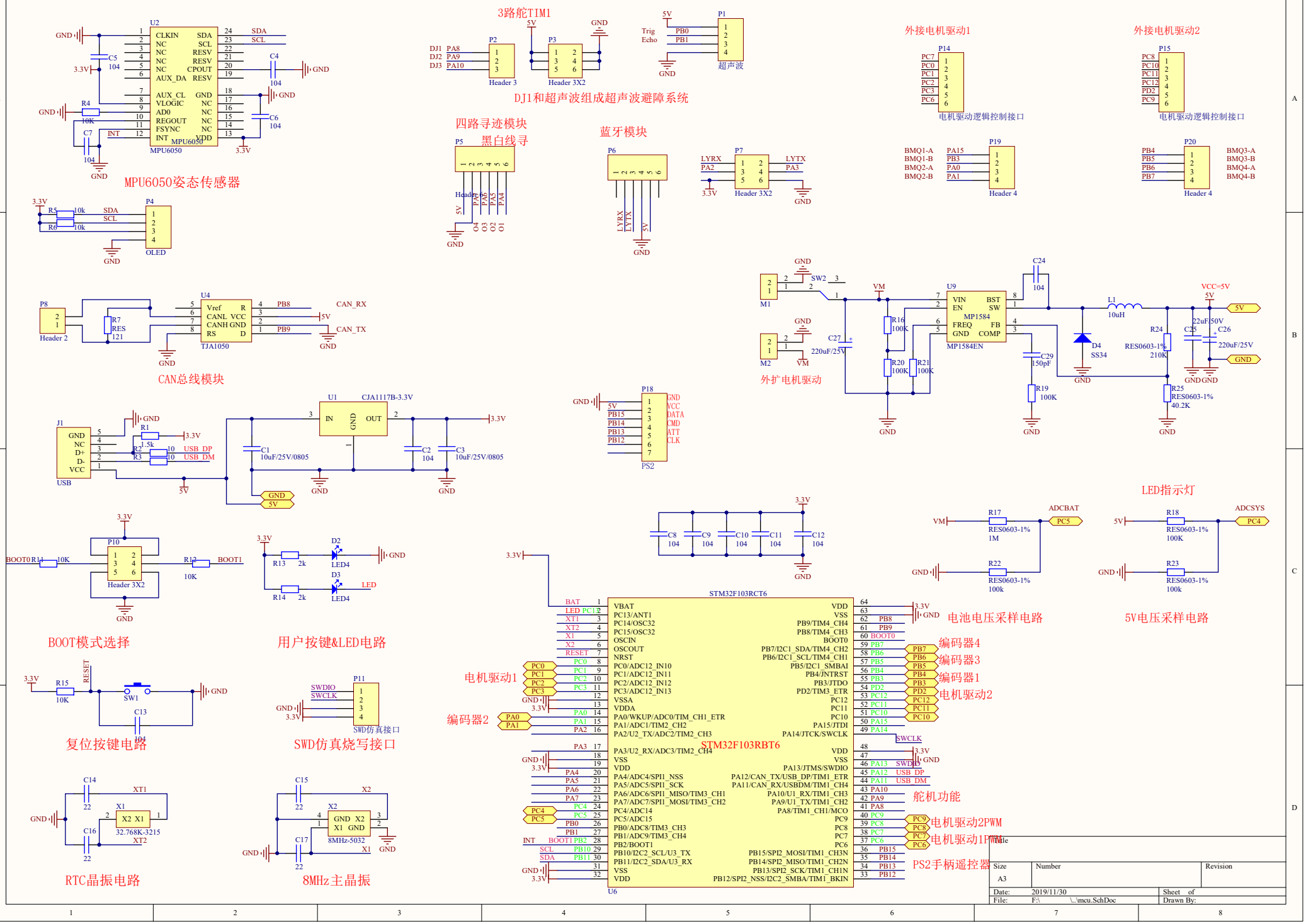
MPU6050姿态传感器
U2
MPU6050
CLKIN
NC
NC
NC
NC
AUX_DA
AUX_CL
VLOGIC
AD0
REGOUT
FSYNC
INT
SDA
SCL
RESV
RESV
CPOUT
RESV
GND
NC
NC
NC
NC
VDD
C5 104
C4 104
C6 104
C7 104
R4 10K
3.3V
GND
3路舵TIM1
P2
Header 3
P3
Header 3X2
DJ1 PA8
DJ2 PA9
DJ3 PA10
DJ1和超声波组成超声波避障系统
P1
超声波
Trig PB0
Echo PB1
外接电机驱动1
P14
电机驱动逻辑控制接口
外接电机驱动2
P15
电机驱动逻辑控制接口
四路寻迹模块
黑白线寻
P5
Header 6
蓝牙模块
P6
P7
Header 3X2
LYRX PA2
LYTX PA3
P19
Header 4
BMQ1-A PA15
BMQ1-B PB3
BMQ2-A PA0
BMQ2-B PA1
P20
Header 4
BMQ3-A PB4
BMQ3-B PB5
BMQ4-A PB6
BMQ4-B PB7
P4
OLED
R5 10k
R6 10k
SDA
SCL
P8
Header 2
R7 RES 121
U4
TJA1050
Vref
CANL
CANH
RS
R
VCC
GND
D
PB8
PB9
CAN_RX
CAN_TX
5V
外扩电机驱动
M1
M2
SW2
VM
U9
MP1584EN
MP1584
VIN
EN
FREQ
GND
BST
SW
FB
COMP
C24 104
L1 10uH
VCC=5V
5V
C27 220uF/25V
R16 100K
R20 100K
R21 100K
C29 150pF
R19 100K
D4 SS34
R24 RES0603-1% 210K
C25 22uF/50V
C26 220uF/25V
R25 RES0603-1% 40.2K
J1
USB
GND
NC
D+
D-
VCC
R1 1.5k
R2 10
R3 10
USB_DP
USB_DM
U1
CJA1117B-3.3V
IN
OUT
C1 10uF/25V/0805
C2 104
C3 10uF/25V/0805
P18
PS2
PB15
PB14
PB13
PB12
VCC
DATA
CMD
ATT
CLK
BOOT模式选择
P10
Header 3X2
BOOT0
BOOT1
R11 10K
R12 10K
用户按键&LED电路
R13 2k
R14 2k
D2
D3
LED4
LED
复位按键电路
R15 10K
RESET
SW1
C13 104
SWD仿真烧写接口
P11
SWDIO
SWCLK
RTC晶振电路
C14 22
C16 22
XT1
XT2
X1
X2
32.768K-3215
8MHz主晶振
C15 22
C17 22
8MHz-5032
STM32F103RCT6
STM32F103RBT6
U6
电池电压采样电路
C8 104
C9 104
C10 104
C11 104
C12 104
R17 RES0603-1% 1M
R22 RES0603-1% 100k
ADCBAT
PC5
LED指示灯
R18 RES0603-1% 100K
R23 RES0603-1% 100k
ADCSYS
PC4
电机驱动1
编码器2
编码器4
编码器3
编码器1
电机驱动2
舵机功能
电机驱动2PWM
电机驱动1PWM
PS2手柄遥控器
Title
Size A3
Number
Revision
Date: 2019/11/30
File: F:\ \..\mcu.SchDoc
Sheet of
Drawn By:

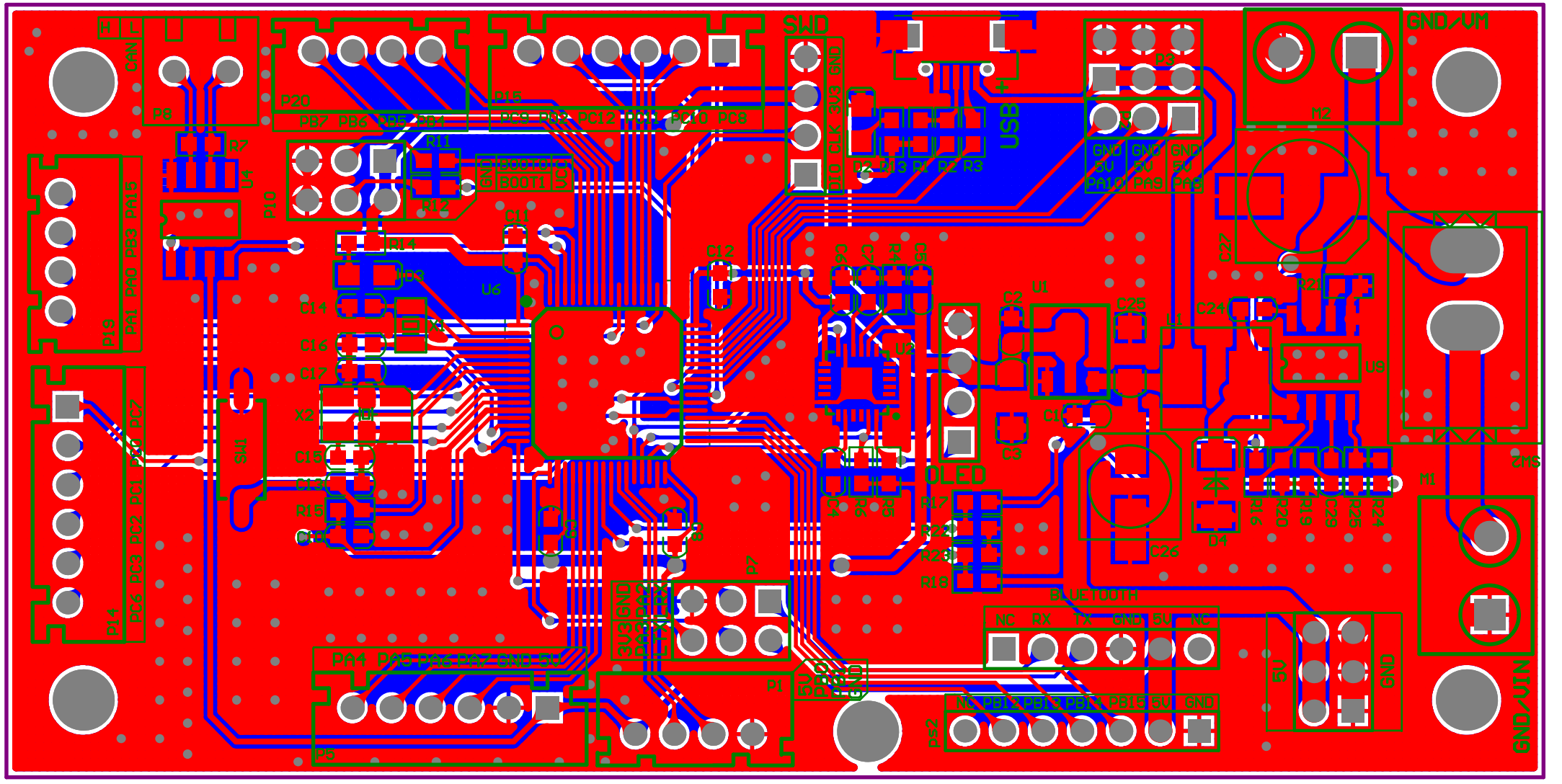
SWD
USB
OLED
BLUETOOTH
GND/VIN
CAN
P8
P20
P15
P19
P14
P5
P7
P1
P2
P3
M1
M2
U1
U2
U4
U6
U9
X1
X2
X4
SW1
D4
C26
C27
C28
C29
R16
R20
R19
R25
R24
R17
R22
R23
R18
R7
R11
R12
R14
R13
C11
C12
C14
C16
C17
C15
C13
C2
C3
C10
C25
C24
C7
C8
C9
C4
C5
C6
C1
C3
PB7 PB6 PB5 PB4
PC9 PC8 PC12 PC11 PC10 PC3
PA1 PA0 PB3 PA15
PC6 PC3 PC2 PC1 PC0 PC7
PA4 PA5 PA6 PA7 GND 5V
NC RX TX GND 5V NC
NC PB12 PB13 PB14 PB15 5V GND
GND 5V PA10 GND 5V PA9 GND 5V PA8
BOOT0
BOOT1
3V3 GND
GND