REDUCE FUEL COSTS. REDUCE EMISSIONS. EASILY.

SMARTFuel RFID System User Guide

©2020 Optimus Technologies Inc.

Last Revised on August 11, 2020 5:21 PM

6901 Lynn Way, Pittsburgh, PA 15208

(412) 727-8228

optimustec.com

Table of Contents

Introduction **4**

Disclaimer **4**

Contact Information **4**

General Safety **4**

System Overview **5**

Operation Overview **5**

Components **6**
- SMARTFuel Vehicle Tag 6
- Nozzle Reader 6
- Control Panel 6
- User Interface 7

Configure the Authorized Vehicle List **8**
- Create or Modify the Vehicle List 8
- Load the Vehicle Configuration List 9

View the Vehicle List **9**

Override the Pump **9**

Transactional Data and Web Portal **9**
- Transactional Data CSV File 10

Appendix **13**
- Nozzle Unit RFID Reader Installation 13
- Control Panel Overview 14
- Troubleshooting 15

Introduction

This user manual has been developed to provide technicians with the basic understanding of the SMARTFuel Radio Frequency Identification (RFID) System manufactured by Optimus Technologies. Any maintenance or repairs should be performed by trained service technicians. No attempt should be made to operate the system until this manual and supporting documents have been read and fully understood.

Disclaimer

All information, illustrations and specifications contained in this manual are based upon the latest product information available at the time of publication. Optimus will make its best efforts to update clients of manual changes. New products or upgrades introduced after the issue date of this manual will be added as supplements or updated revisions. The latest information is available through Optimus or its distributors.

Contact Information

For the latest manual or any questions regarding content, please contact Optimus Technologies at 412.727.8228 or email info@optimustec.com.

General Safety

When performing maintenance or installation work on a refueling system, use standard safety practices and refer to the original equipment manufacturer's manual.

System Overview

The SMARTFuel System is an RFID Fuel Management System (FMS) that enables fleet managers to better monitor, track, and control the fueling of their vehicles while using a variety of fuel types.

The SMARTFuel solution is particularly suited for the integration of alternative fuels into medium and heavy-duty truck fleets. The system consists of four primary components:

- SMARTFuel Vehicle Tags
- RFID Nozzle Reader
- SMARTFuel Control Panel
- User Interface Display
- SMARTFuel Dashboard

The SMARTFuel system enables seamless coordination between fleet vehicles, fuel dispensers, and data servers. Managers are provided a new way to visualize their fleet fueling transactions with measured information about fuel costs, consumption, and emissions.

Operation Overview

RFID Equipment is installed on fuel nozzles and vehicles.

The RFID components allow for seamless automated vehicle identification. The RFID reader is easily bolted onto existing nozzles and is used to scan SMARTFuel Vehicle Tags installed onto the fuel tank of the truck. These tags can be programmed with a range of data, including customer and vehicle information, authorized fuel type, and other custom fields.

Fuel Dispenser and SMARTFUEL Control Panel authorize fueling and transmit fleet data.

The programmable SMARTFuel Control Panel authorize refueling activities and relays transactional data to a central database. This gives fleet managers a new level of control, and prevents any unauthorized fueling with the system. For the operator, fueling occurs as normal. Behind the scenes, the SMARTFuel Control Panel authorizes the transaction and refilling while calculating and recording data about the fueling event.

An Optimus Server collects all data for Fleet Managers to review.

Embedded software relays fleet information to an Optimus server to track locations, fuel usage, emission calculations, and more. Optimus helps fleet managers visualize their fleet and performance data - all in real time. With this data, managers can better oversee their fleet and see firsthand the results of utilizing alternative fuels.

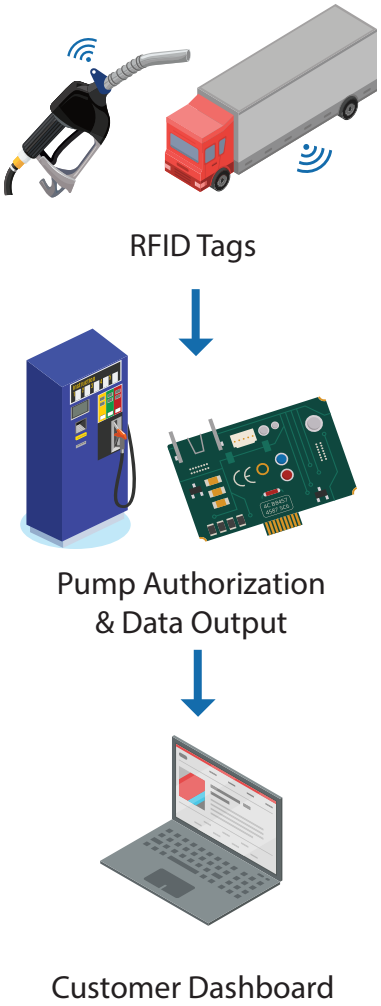

Components

SMARTFuel Vehicle Tag

A maintenance free, passive RFID tag is mounted on the vehicle in close proximity to the fuel tank opening and used to uniquely identify the vehicle to the nozzle reader. The tag can be programmed to allow only specific fuel types, which prevents user error while refilling.

RFID Vehicle Tag

22 Digit ID Number

Each tag has a unique 22 digit ID, which is created by combining several component IDs and parameters.

The customer code and tag number combine to create a Tag ID that administrators use to tell the system what vehicles are authorized to fuel. More information on this included on page 8.

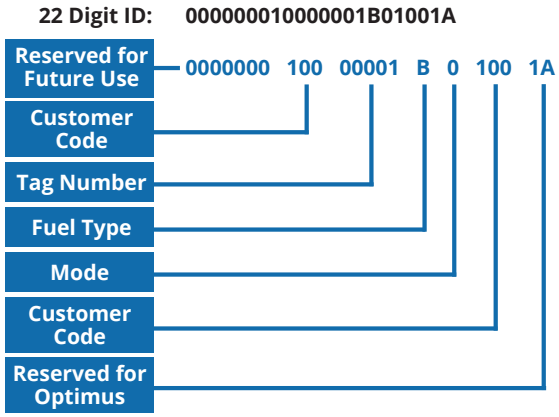

RFID Tag Breakdown

RFID Nozzle Reader

An RFID reader is attached to each fuel dispensing nozzle and used to scan vehicle tags. The reader is automatically activated whenever the nozzle is moved.

When the reader detects a corresponding vehicle tag, the tag's unique ID and required fuel information is sent via an encrypted channel to the control panel. This controller then communicates to the FMS software and determines if and how much fuel is authorized to dispense.

RFID Nozzle Reader

Activation and Shut Off Time

Upon sensing any motion, an internal gyroscope activates the nozzle reader and an indicator LED flashes red. The LED flashes green with a successful scan and fuel can be immediately dispensed. If the LED flashes green but the fuel pump does not activate, that tag has not been authorized in the vehicle list.

After a successful scan, fuel is dispensed as long as the nozzle reader is in proximity to a vehicle tag. Once removed, the nozzle remains active for a configurable timeframe before shifting into a dormant sleep mode.

Nozzle ID

Admins use the Nozzle ID to configure the system and track fueling data. The Nozzle ID is derived from a serial number located underneath the sensor cover of the RFID Reader. After removing the cover, the second half of the serial number is the Nozzle ID. See the included photo for reference.

Identifying the Nozzle ID

Control Panel

The control panel forwards data from the vehicle and nozzle reader to a central FMS. The control panel will only authorize a transaction if a vehicle tag is present and active in the fuel management system.

USB Input

Administrators use a USB input on the control panel to configure SMARTFuel system parameters such as authorized vehicles and nozzle reader IDs as well as logging transaction data. Administrators add or remove vehicles to the authorized list by saving a configuration CSV file on a USB flash drive that is inserted into the panel. Users can also log all transactional data by inserting a blank USB drive. More information on these actions is included later in this manual.

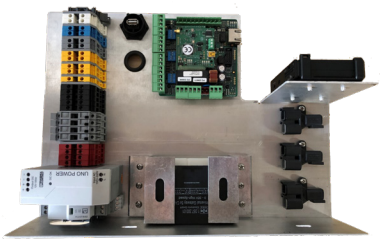

Control Panel
(See appendix for breakdown)

Telematics Unit

The SMARTFuel System utilizes a telematics platform for network connection, which enables the remote management of assets through GPS and cellular data technology. This system serves as a gateway for remote administration and data analysis.

With remote network connectivity, the SMARTFuel System delivers a complete solution including hardware, software, cellular data plan, web server, and web portal interface.

Telematics Unit

User Interface Display

The SMARTFuel System utilizes a simple user interface with five soft keys. The first four buttons of the UI are used for menu navigation. Users cycle through options with the up and down arrows, and use the left and right arrows to move forward or backward through menus.

The last button is context sensitive, and varies between two uses. When an O symbol appears, the button is pressed to select or confirm a choice. When an exit symbol appears, press the button to exit the current menu and return to the home screen.

No interaction with the interface is necessary during typical refueling procedures, and the default display will show basic system information to users. Administrators have access to additional settings and the authorized vehicle list.

User Interface

Menu Navigation

Select

Exit / Return to Default Screen

Interface Overview

The interface has three information screens to cycle through, which provide operation details and overall system status. Users can cycle through menus using the left and right arrows to see the status of each fuel pump attached to the system.

Parameter	Definition
IWC Status	Wireless Controller Connection Status
MRS Status	Controller Communication Gateway Status
Network Status	Internet Connection Status
Tank Level %	Fuel Tank Level
Tank Temp	Fuel Tank Temperature

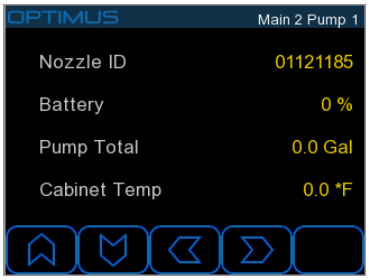

Fuel Pump Screen

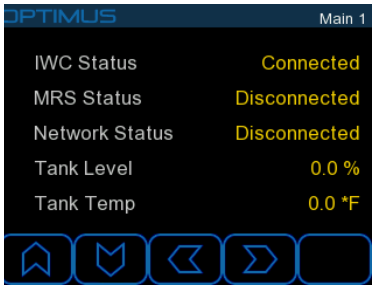

Default Screen

Administrator Menu

Administrators can access more features of the SMARTFuel System, such as overriding the pump restrictions and configuring the authorized vehicle list. Administrators access the menu by inserting their admin key into the control panel cabinet and entering their passcode on the display.

1. Insert and turn the admin key into the control panel cabinet.
2. Enter your admin passcode.
3. Press Select.

Users choose from three options:

- Override and activate the pump.
- View the current list of authorized vehicles.
- Upload a new vehicle list.

Admin Passcode Screen

Admin Menu

Control Panel Cabinet

System Operation

Configure the Authorized Vehicle List

The SMARTFuel system reads a CSV file for a list of authorized vehicles. The file contains the 5-8 digit Vehicle ID, along with its assigned tag number. Additionally, any Nozzle IDs configured for the unit must be listed in their corresponding pump position. This list needs to be uploaded to the control panel via a USB flash drive, and only administrators are authorized to upload the file.

SMARTFUEL List			
Vehicle ID	Tag ID	Nozzle 1 ID	Nozzle 2 ID
303030	10000001	123456	9876543
303031	10000002		
303032	10000003		
303033	10000004		
303034	10000005		
303035	10000006		
303036	10000007		

Sample Vehicle List CSV

Create or Modify the Vehicle List

To add or remove authorized vehicles, you must first create or modify a configuration CSV file on a USB flash drive, then insert the drive into the control panel. The system will dispense fuel only to vehicle tags that correspond to the authorized Nozzle ID tags.

The Vehicle ID is a given number assigned to a truck. The Tag ID is created by combining the customer's code and the vehicle's RFID tag number. Both of these codes can be derived from the longer 22 digit ID code of the RFID tag. See the figure to the right.

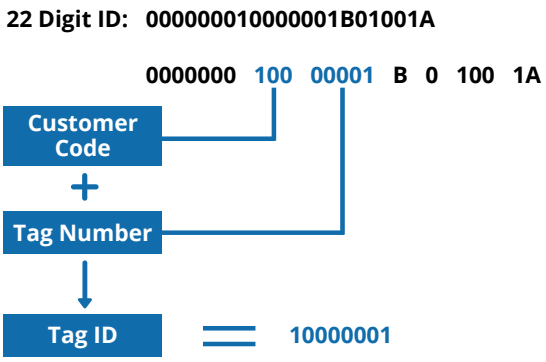

Creating the Tag ID

The vehicle list file must be the only file on the USB drive, and must be named "SMARTFuel_Configuration.csv", with exact capitalization and an underscore between the words. Also ensure that the appropriate Nozzle IDs are listed. Refer back to the RFID Nozzle Reader component section for details in locating the Nozzle ID.

1. Open or create "SMARTFuel_Configuration.csv".
2. Add or remove Vehicle IDs in column A.
3. Add or remove the Tag ID number in column B that corresponds to its vehicle in column A.
4. After configuring the list, save the CSV file onto the USB flash drive and name it "SMARTFuel_Configuration.csv".

Load the Vehicle Configuration List

An administrator uploads the configuration file by opening the fuel dispenser cabinet, inserting the flash drive into the USB input slot of the control panel, and then loading the file through the user interface. For help in locating the USB input slot, refer to the control panel breakdown in the appendix on page 14.

Load Vehicle List

A vehicle list file must be amended to retain previous vehicle entries. When uploading a vehicle list, the previous is completely overwritten.

1. Insert the USB flash drive into the control panel USB input slot.
2. Access the admin menu by inserting your admin key and entering your passcode.
3. Select *Load New Vehicle List*.
4. Select *Load New Vehicle ID File*.

Ensure the "USB Inserted" and "Vehicle ID File Detected" checks on the display are "True" after inserting the USB drive and accessing the admin menu.

View the Vehicle List

The current vehicle list is accessed in the admin menu.

1. Access the admin menu by inserting your admin key and entering your passcode.
2. Select *View Vehicle List*.

The screen relays the current SMARTFuel_Configuration.csv file, with the Vehicle ID on the left and the corresponding Tag ID on the right.

Vehicle List

Override the Pump

If necessary, an administrator is able to override the RFID system and immediately activate the fuel pump.

1. Access the admin menu by inserting your admin key and entering your passcode.
2. Select *Override Pump*.
3. Select the desired pump.
4. Select *Activate Pump*.
5. Press any key to navigate to the vehicle list.
6. Select the vehicle to attribute the transaction to and begin fueling.
7. When finished fueling, press the *Select* key to end the transaction.

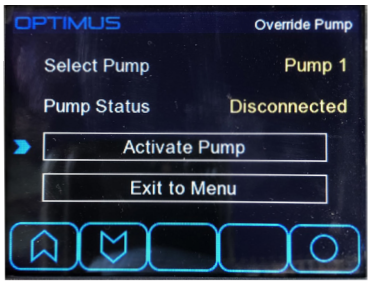

Override Pump

Web Portal

The SMARTFuel System records all fueling transactional data along with a number of parameters. Administrators can view and download the data by accessing a web portal at "dashboard.optimustec.com". Optimus will provide administrators with login information.

After logging on, administrators choose a station from the list to bring up a page with system details and complete transaction data.

Vehicles (24)

Vehicle	Last Contact
DC11881	9:34 AM
DC13565	9:34 AM
DC11878	9:34 AM
DC11522	9:34 AM
DC13154	9:34 AM
12k Tank W St	9:34 AM
DC13137	9:34 AM
DC13144	9:34 AM
DC13133	9:34 AM
DC13155	9:34 AM

See All Vehicles

Web Portal Default Page

Overview

After selecting a station, the admin is presented with overview data. The TCM details provide unique identifiers for the telematics unit installed in the SMARTFuel System.

Below the TCM Details, there are four tabs that contain refueling data and system status.

Engineering Data

Admins download transactional data from a set of dates using the engineering data tab. They set the date in the text fields, then click *Download* to save a CSV file. See the next section for a breakdown of the included parameters.

Engineering Data | Updates | Latest | Active Faults

Report Data:
First record: 5/18/2020 5:11 PM
Last record: 7/21/2020 9:36 AM

07/14/2020 to 07/21/2020

CSV
Include GPS
KMZ (Google Earth)

Download

Web Portal Menus

Transactional data files can be very large, as they record refueling status every 5 seconds. It is recommended to limit the selected timeframe to 2-3 days to avoid encountering problems with large data. See the section on CSV files for more information.

Latest

The Latest tab displays the most recent transactional data report. The data displayed includes the same parameters as the engineering data tab.

Transactional Data CSV File

	A	B	C	D	E	F	G	H	I
1	Timestamp(UTC)	Report Format(Number)	BuildNumber	Fault_MRS	Fault_TD	Fault_IWC	Fault_Pneum	N1_TD_Year(years)	N1_TD_Day(days)
2	2020-07-21T00:00:00.270Z	telematics_smartfuel (10020) (10020)	138	0	0	0	0	2020	17
3	2020-07-21T00:00:05.270Z	telematics_smartfuel (10020) (10020)	138	0	0	0	0	2020	17
4	2020-07-21T00:00:10.273Z	telematics_smartfuel (10020) (10020)	138	0	0	0	0	2020	17
5	2020-07-21T00:00:15.270Z	telematics_smartfuel (10020) (10020)	138	0	0	0	0	2020	17
6	2020-07-21T00:00:20.270Z	telematics_smartfuel (10020) (10020)	138	0	0	0	0	2020	17
7	2020-07-21T00:00:25.270Z	telematics_smartfuel (10020) (10020)	138	0	0	0	0	2020	17
8	2020-07-21T00:00:30.270Z	telematics_smartfuel (10020) (10020)	138	0	0	0	0	2020	17
9	2020-07-21T00:00:35.270Z	telematics_smartfuel (10020) (10020)	138	0	0	0	0	2020	17
10	2020-07-21T00:00:40.273Z	telematics_smartfuel (10020) (10020)	138	0	0	0	0	2020	17

Sample Transaction Log CSV File

Refer to this breakdown of parameter definitions while analyzing the transactional record file.

All values starting with "N1" are for the first nozzle pump in the system. These parameters are repeated in the next columns for a second pump (if applicable) and then for the most recent transaction. N2 denotes a second Nozzle Reader, and RX is used for the most recent transaction.

Parameter	Definition
Timestamp	Transaction Date and Time. Reported every 5 minutes.
Report Format(Number)	Version of the Transaction Report
BuildNumber	Software Version
Fault_MRS	Fuel Nozzle ID Number
Fault_TD	Fault with Telematics or Time / Date
Fault_IWC	Fault with IWC
Fault_Pneum	Fault with the Pneumercator
N1_TD_Year(years)	Timestamp of Transaction - Year
N1_TD_Day(days)	Timestamp of Transaction - Days
N1_TD_Month(months)	Timestamp of Transaction - Months
N1_TD_Hours(hr)	Timestamp of Transaction - Hours
N1_TD_Minutes(mins)	Timestamp of Transaction - Minutes
N1_TD_Seconds(s)	Timestamp of Transaction - Seconds
N1_nozzle_id	RFID System Nozzle ID
N1_fueling_amount(gal)	Transaction Fuel Amount (in gallons)
N1_exit_status(enum)	Reports how the fueling event was exited. 0: Normal 1: Max Relay On Attempts Reached 2: Max Relay Off Attempts Reached 3: Fueling Timed Out 4: MRS Fault 5: Max Fuel Amount Reached

N1_batteryLife(%)	Nozzle Unit Battery Life
N1_tag_number	RFID ID Tag Number
N1_tag_fuelType	Fuel Type in Hex Format
N1_tag_customerCode	Customer ID Number
N1_tag_optimusCode	Optimus's Code in Tag ID
N1_tag_transType(enum)	Transaction Type (0 for RFID Scan, 1 for Override)
N1_vehicle_id	Vehicle ID Number

At this point, all values that begin with N1 are repeated for the second nozzle (N2). The parameters are repeated once more after the N2 entries to denote the most recent transaction (Rx).

The most recent transaction (Rx) displays whatever tag was most recently scanned, even if that tag is not authorized for fueling.

The parameters below continue after the Rx_vehicle_id entry.

Parameter	Definition
N1_TotalFuel(gal)	Total Nozzle 1 Fuel Pumped
N2_TotaFuel(gal)	Total Nozzle 2 Fuel Pumped
NT_TotalFuel(gal)	Total System Fuel Pumped
P_IWCRelayDuration(sec)	IWC Setup Parameter
P_MaxFuelAmount(gal)	Max Volume of Fuel Allowed per Transaction
P_PulsesPerGallon	Pulse Counter System Configuration (Set at 10, 100, or 1000)
S_TankLevel(%)	Fuel Tank Level (percentage)
S_TankTemp(F)	Fuel Tank Temperature Level
S_Cabinet1Temp(F)	Cabinet 1 Temperature
S_Cabinet2Temp(F)	Cabinet 2 Temperature
Vld_TankLevel(bool)	Reports if the tank level sensor is valid.
Vld_Cabinet1(bool)	Reports if the cabinet 1 temperature sensor is valid.
Vld_Cabinet2(bool)	Reports if the cabinet 2 temperature sensor is valid.
Vld_TankTemp(bool)	Reports if the tank temperature sensor is valid.

Filter the Transaction List

The last four parameters provide a summary of the transaction, including a Transaction ID number, the Vehicle ID, the pump number, and the amount of fuel dispensed.

Parameter	Definition
NT_TransactionID	Unique Transactional ID for that System
NT_TransactionVehID	Vehicle ID Number
NT_TransactionPump(enum)	Denotes the Pump Used for this Transaction
NT_TransactionFuelAmount(gal)	Fuel Pumped During this Transaction

To avoid a large dataset, admins are able to filter one particular parameter column to display only unique transactions.

1. Navigate to parameter NT_TransactionID.
2. Filter this parameter to display only unique entries.

For example, in Microsoft Excel:

1. Highlight the NT_TransactionID column.
2. Select the *Data Menu*, then *Advanced*.
3. Select the checkbox by Unique records only then select OK.

Manual Backup

Administrators with access to the USB input slot of the control panel insert a blank USB flash drive in, and the system automatically compiles all transaction data into a CSV file.

1. Open the control panel cabinet.
2. Locate the USB input slot (Refer to the figure on the right)
3. Insert a blank USB flash drive.

With a USB inserted, the system logs each transaction with the following parameters.

Parameter	Definition
Timestamp	Transaction Date and Time
Transaction ID	Transaction Identification Number
Transaction Type	Description of Transaction 0 - Normal Fueling, 1 Pump Override
Nozzle Number	Fuel Nozzle ID Number
Nozzle ID	Nozzle ID Tag Number
VehID	Vehicle ID Tag Number
TagID	Tag ID Number that specifies Vehicle Tag
Fuel Amount [gal]	Gallons of fuel dispensed during transaction
Total Fuel for Nozzle [gal]	Total fuel dispensed by that nozzle
Total Fuel [gal]	Total fuel dispensed by station
Battery [%]	Battery health of the Nozzle RFID
Nozzle Faults	Number of faults that occurred during process

Appendix

RFID Nozzle Reader Overview and Installation

The RFID reader is installed onto any standard fuel nozzle. There are three main modes of operation for the Nozzle Reader.

Nozzle Reader Modes

Search

The reader searches for the presence of an SMARTFuel Vehicle Tag, indicated by a red flashing LED. If it finds a valid tag, it will switch into Fueling mode.

Fueling

Once the reader detects a valid RFID tag, it sends out a wireless packet containing tag data and its own ID to the SMARTFuel Control Panel. The LED flashes green to indicate that it has found a tag and that fueling is in progress. The reader will continue checking for the presence of the tag and send out wireless packets until it is moved away from the vehicle tag. The LED will continue flashing green while actively refilling.

Upon removal, a nozzle-out wireless packet is sent to the control panel to indicate fueling has stopped. This is indicated by a double flash of the red LED. Thereafter, the reader will go into Search mode.

Sleep

When the reader has not detected a valid tag and has not been moved for 30 seconds, it enters a low-power sleep mode. To wake the reader up, move and rotate the nozzle.

Installing the RFID Nozzle Reader

Use threadlocker on all hardware during installation.

1. Slide the reader bracket onto the nozzle (figure 1).
2. Position the reader bracket all the way to the base, tighten the bracket in place (figure 2).
3. Slide the RFID reader onto the nozzle and align screw holes with brackets (figure 3).
4. Position the secondary bracket behind the reader bracket (figure 4).
5. Attach the brackets to the RFID reader with provided hardware (figure 5).
6. Attach the RFID sensor to the reader with provided hardware (figure 6).

Verify that the reader is in a suitable position to scan tags when nozzle is inserted into the vehicle fuel tank.

Figure 1

Figure 2

Figure 3

Figure 4

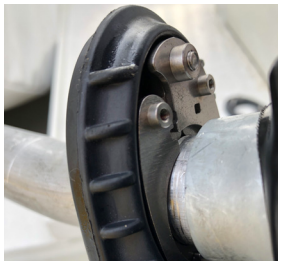
Figure 5

Figure 6

Final

Control Panel Overview

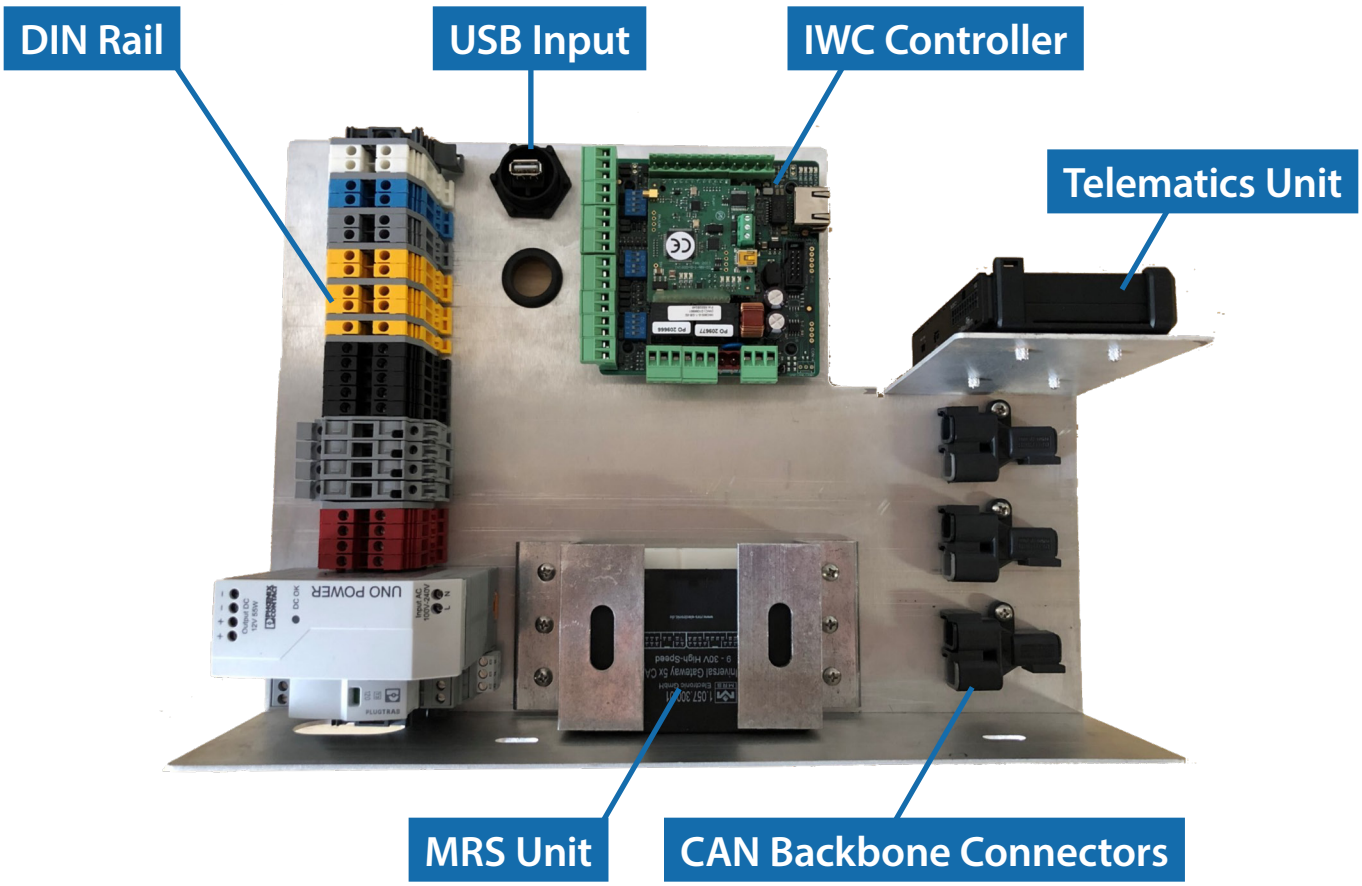

Component	Definition
DIN Rail	Power supply, surge protector and connection bank for the panel and all components.
USB Input	Input for USB Flash Drive to make system modifications. 1. Upload a new vehicle authorization list by inserting a USB drive with a configuration CSV file. 2. Log transactional data by inserting a blank USB drive.
IWC Controller	A wireless controller verifies SMARTFuel tags prior to authorizing a transaction. The FMS will then apply further authorization decisions based on whether the vehicle is authorized in a database.
Telematics Unit	Enables remote analytics and management through GPS and cellular data technology.
MRS Units	Digital electronic controller that is used to measure fuel pulse outputs. The MRS device operates as the pulse counter to determine how much fuel was dispensed for both pumps and the individual transactions. In certain applications the MRS acts as a communication gateway for external tank communication protocols.
CAN Backbone Connectors	These units are the CAN backbone interconnection point. At the origin and end of the backbone the system utilizes 120Ω terminating resistors.

Troubleshooting

Contact Optimus Technologies for additional assistance while troubleshooting issues.

Known Issues

- After selecting 'Override Pump' on the admin menu, the last button on the user interface is an Exit icon rather than a Select (O) icon. Select the pump for override using this Exit icon.
- When the user interface prompts for passcode and key is removed, the screen may still prompt for a passcode. To exit screen, enter FMS passcode to access admin menu, then remove key.

Pump Authorization

There are two typical explanations for why a transaction has failed. Follow the troubleshooting instructions below to determine the cause, or contact Optimus for more information.

1. Move the Nozzle Reader to activate its inner gyroscope and check the LED on the reader.

- If the LED flashes red, then the pump is searching for a tag.
- If the LED does not flash red, the unit's battery is dead or a component has failed. Replace the reader and update the Nozzle ID on 'SMARTFuel_Configuration.csv'

2. Attempt to scan a vehicle tag with the reader and check the LED.

- If the LED flashes green, then the reader successfully read the tag and fueling is authorized.
- If the LED flashes red, then there is a problem with the tag. Replace the tag and update the 'SMARTFuel_Configuration.csv' file to include the new Tag ID.

Telematics Unit

Refer to this chart to diagnose problems with the Telematics units.

Green LED (Soft)		Red LED (System)	
Sequence	Meaning	Sequence	Meaning
No Cellular No GPS	3 times (50ms ON/100ms OFF) 3550ms OFF	C4Max OFF	OFF
No Cellular GPS OK	2 times (50ms ON/100ms OFF) 3700ms OFF	Ext. Power/Run	ON
Cellular OK No GPS	1 time (50ms ON/100ms OFF) 3850ms OFF	Int. Bat/Run	ON
Cellular OK GPS OK	2000ms ON 2000ms OFF	Shutdown (hibernate)	5ms ON/2000ms OFF
		Idle/Sleep (idle)	twice (5ms ON/50ms OFF) 1895ms OFF

OPTIMUS®
TECHNOLOGIES
REDUCE FUEL COSTS. REDUCE EMISSIONS. EASILY.