MCU

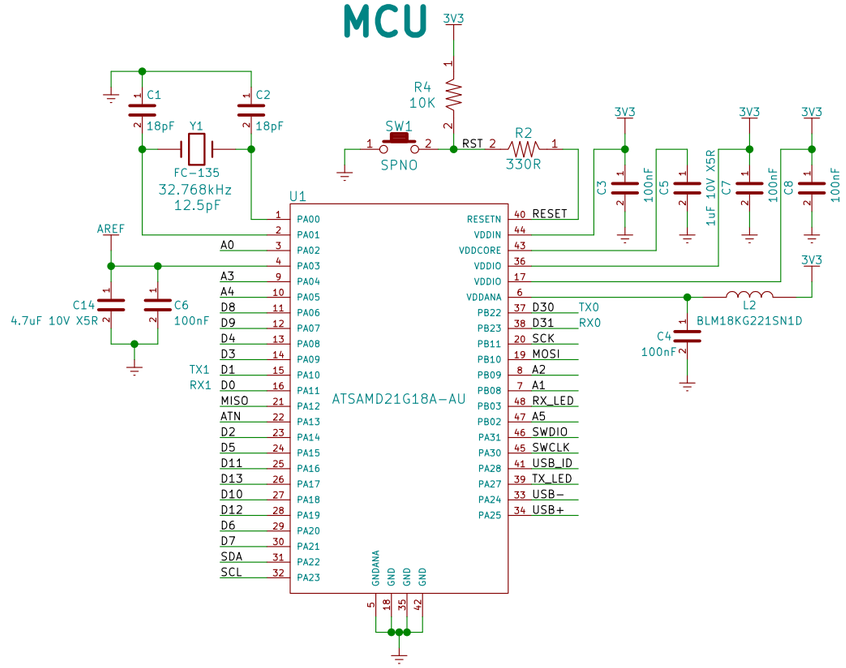

POWER MANAGEMENT

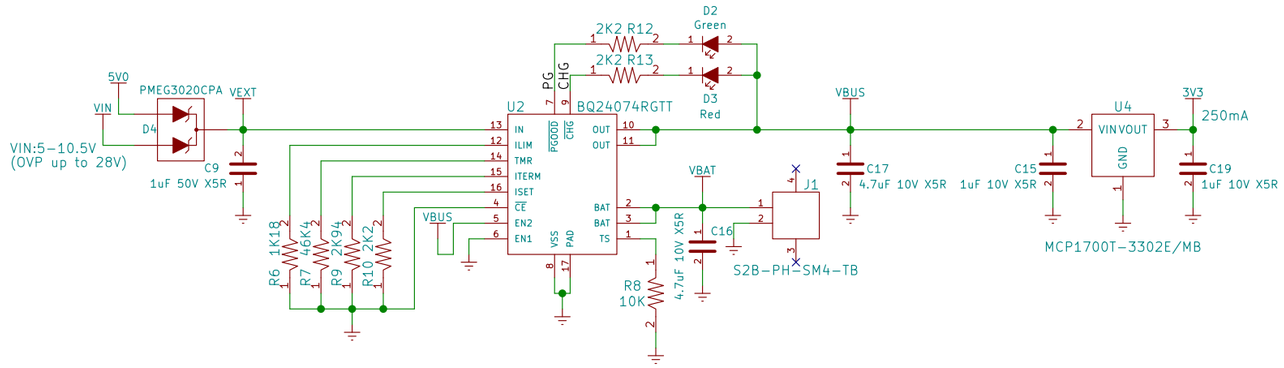

EN2	EN1	I-INPUT LIMIT
LOW	LOW	100mA
LOW	HI	500mA
HI	LOW	Set by R6:1.3A
HI	HI	Standby

LED

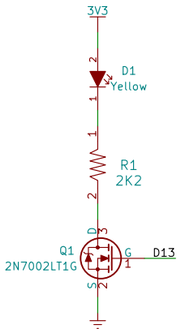

MOUNTING

FIDUCIALS

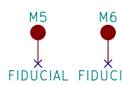

LOGO

USB-DEVICE

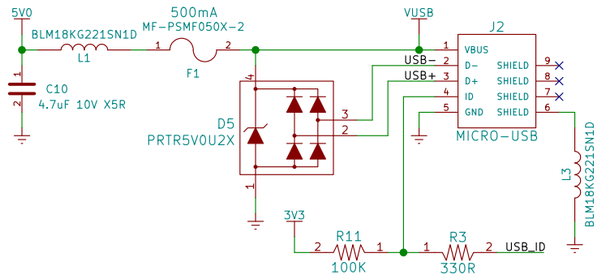

SERIAL FLASH

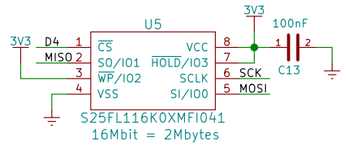

EUI-64 MAC ID

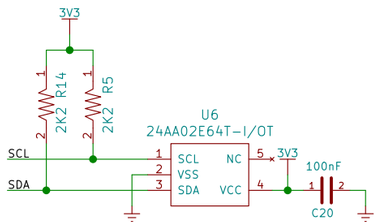

BREAKOUT

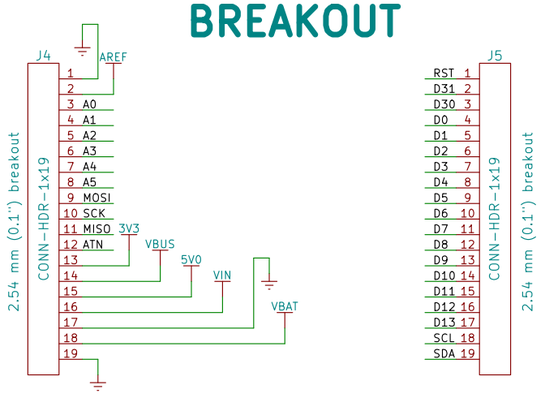

SWD/JTAG

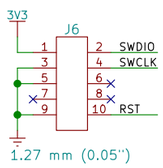

RFM95W

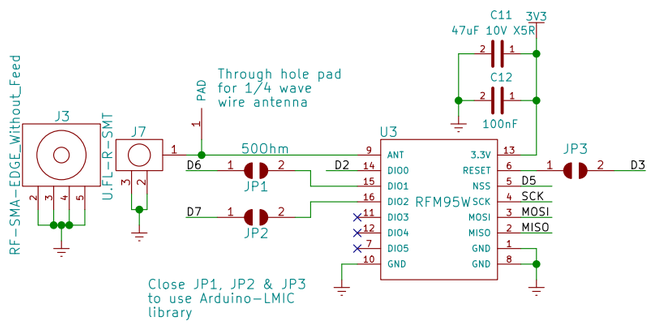

NOTES

1. All capacitors are NP0/C0G 50V unless specified.
2. All resistors are 62.5mW 1% unless specified.
3. Close JP1, JP2, & JP3 to run LMIC stack.

Title: Mini Ultra Pro	ROCKET SCREAM
Rev: 0.40	
Rocket Scream Electronics	
Date: 2017-03-03	
File: MINI-ULTRA-PRO-0R40.sch	
Size: A3	
KiCad E.D.A. kicad no-vcs-found-5f4599f59ubuntu16.04.1	Id: 1/1