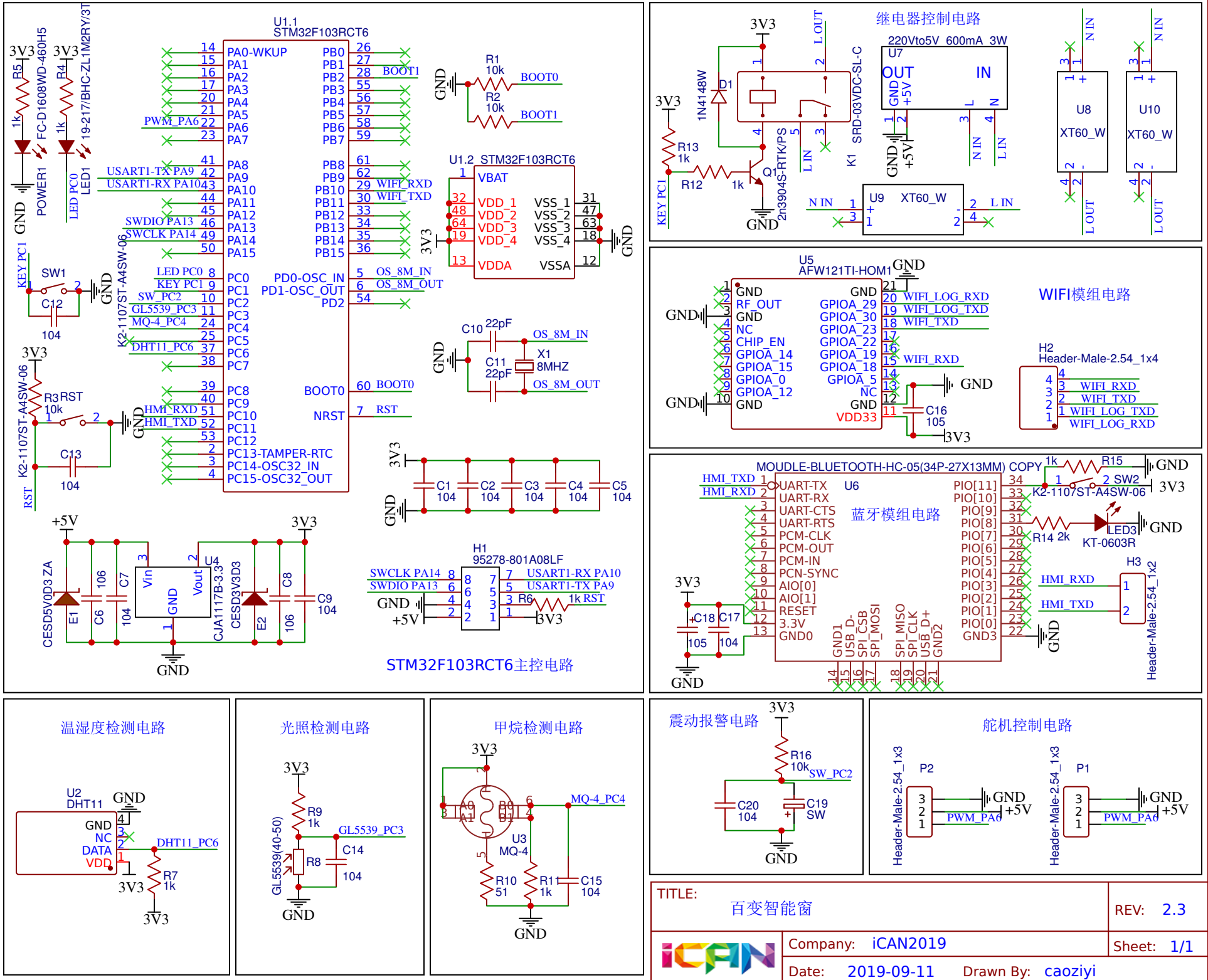
U1.1
STM32F103RCT6
PA0-WKUP
PA1
PA2
PA3
PA4
PA5
PA6
PA7
PA8
PA9
PA10
PA11
PA12
PA13
PA14
PA15
PC0
PC1
PC2
PC3
PC4
PC5
PC6
PC7
PC8
PC9
PC10
PC11
PC12
PC13-TAMPER-RTC
PC14-OSC32_IN
PC15-OSC32_OUT
PB0
PB1
PB2
PB3
PB4
PB5
PB6
PB7
PB8
PB9
PB10
PB11
PB12
PB13
PB14
PB15
PD0-OSC_IN
PD1-OSC_OUT
PD2
BOOT0
NRST
PWM_PA6
USART1-TX PA9
USART1-RX PA10
SWDIO PA13
SWCLK PA14
LED PC0
KEY PC1
SW_PC2
GL5539_PC3
MQ-4_PC4
DHT11_PC6
HMI_RXD
HMI_TXD
WIFI_RXD
WIFI_TXD
OS_8M_IN
OS_8M_OUT
RST
U1.2 STM32F103RCT6
VBAT
VDD_1
VDD_2
VDD_3
VDD_4
VDDA
VSS_1
VSS_2
VSS_3
VSS_4
VSSA
R1 10k
R2 10k
BOOT0
BOOT1
C10 22pF
C11 22pF
X1 8MHZ
C1 104
C2 104
C3 104
C4 104
C5 104
R5 1k
R4 1k
FC-D1608WD-460H5
19-217/BHC-ZL1M2RY/3T
POWER1
LED1
SW1
C12 104
R3 10k
C13 104
K2-1107ST-A4SW-06
+5V
3V3
GND
U4
CJA1117B-3.3
Vin
Vout
CESD5V0D3 ZA
CESD3V3D3
E1
E2
C6 106
C7 104
C8 106
C9 104
H1
95278-801A08LF
R6 1k
1k RST
STM32F103RCT6主控电路
继电器控制电路
U7
220Vto5V_600mA_3W
OUT
IN
GND
+5V
L OUT
L IN
N IN
D1
1N4148W
R13 1k
R12 1k
Q1
2n3904S-RTK/PS
SRD-03VDC-SL-C
K1
KEY PC1
U8
XT60_W
U10
XT60_W
U9
XT60_W
U5
AFW121TI-HOM1
GND
RF_OUT
NC
CHIP_EN
GPIOA_14
GPIOA_15
GPIOA_0
GPIOA_12
GPIOA_29
GPIOA_30
GPIOA_23
GPIOA_22
GPIOA_19
GPIOA_18
GPIOA_5
VDD33
WIFI_LOG_RXD
WIFI_LOG_TXD
WIFI_TXD
WIFI_RXD
C16 105
WIFI模组电路
H2
Header-Male-2.54_1x4
MOUDLE-BLUETOOTH-HC-05(34P-27X13MM) COPY
U6
UART-TX
UART-RX
UART-CTS
UART-RTS
PCM-CLK
PCM-OUT
PCM-IN
PCN-SYNC
AIO[0]
AIO[1]
RESET
3.3V
GND0
PIO[11]
PIO[10]
PIO[9]
PIO[8]
PIO[7]
PIO[6]
PIO[5]
PIO[4]
PIO[3]
PIO[2]
PIO[1]
PIO[0]
GND3
蓝牙模组电路
R15 1k
SW2
K2-1107ST-A4SW-06
R14 2k
LED3
KT-0603R
H3
Header-Male-2.54_1x2
C17 105
C18 104
温湿度检测电路
U2
DHT11
GND
NC
DATA
VDD
R7 1k
光照检测电路
R9 1k
R8
C14 104
GL5539(40-50)
甲烷检测电路
U3
MQ-4
R10 51
R11 1k
C15 104
震动报警电路
R16 10k
C20 104
C19 SW
舵机控制电路
P2
P1
Header-Male-2.54_1x3
PWM_PA6
TITLE:
百变智能窗
REV: 2.3
Company: iCAN2019
Sheet: 1/1
Date: 2019-09-11
Drawn By: caoziyi