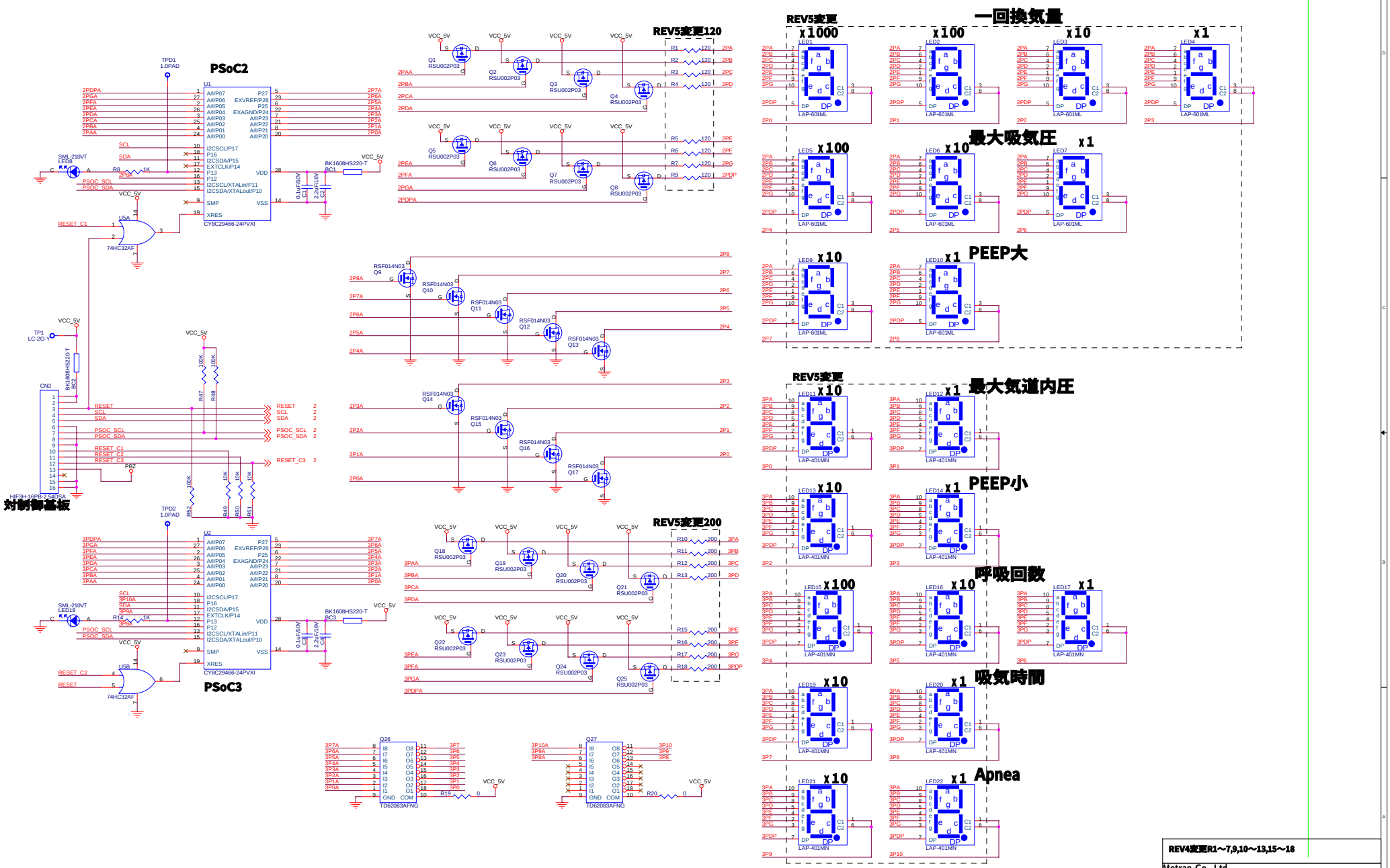

REV4変更R1～7,9,10～13,15～18

Metran Co., Ltd.
2-12-18, Kawaguchi
Kawaguchi-shi, Saitama 332-0015 Japan.
TEL:048-242-0333, FAX:048-242-0550

Title: Compos Disp Board

Size: | Document Number: COMPOS40A | Rev: 5

Date: Monday, January 28, 2013 | Sheet 1 of 2

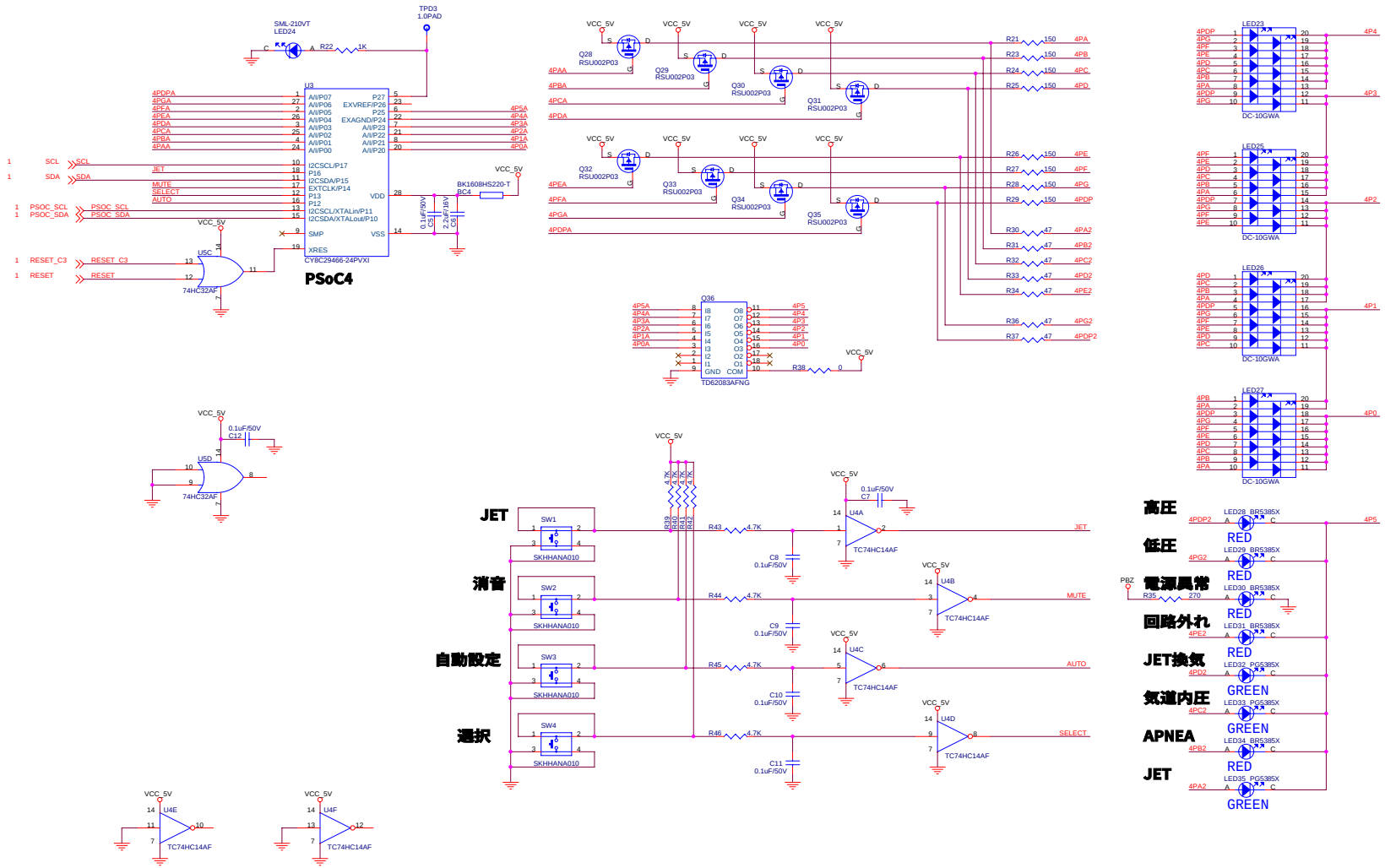

Metran Co., Ltd.
2-12-18, Kawaguchi
Kawaguchi-shi, Saitama 332-0015 Japan.
TEL:048-242-0333, FAX:048-242-0550

Title	Compos Disp Board
Size / Document Number	COMPOS40A
Rev	5
Date:	Monday, January 28, 2013
Sheet	2 of 2