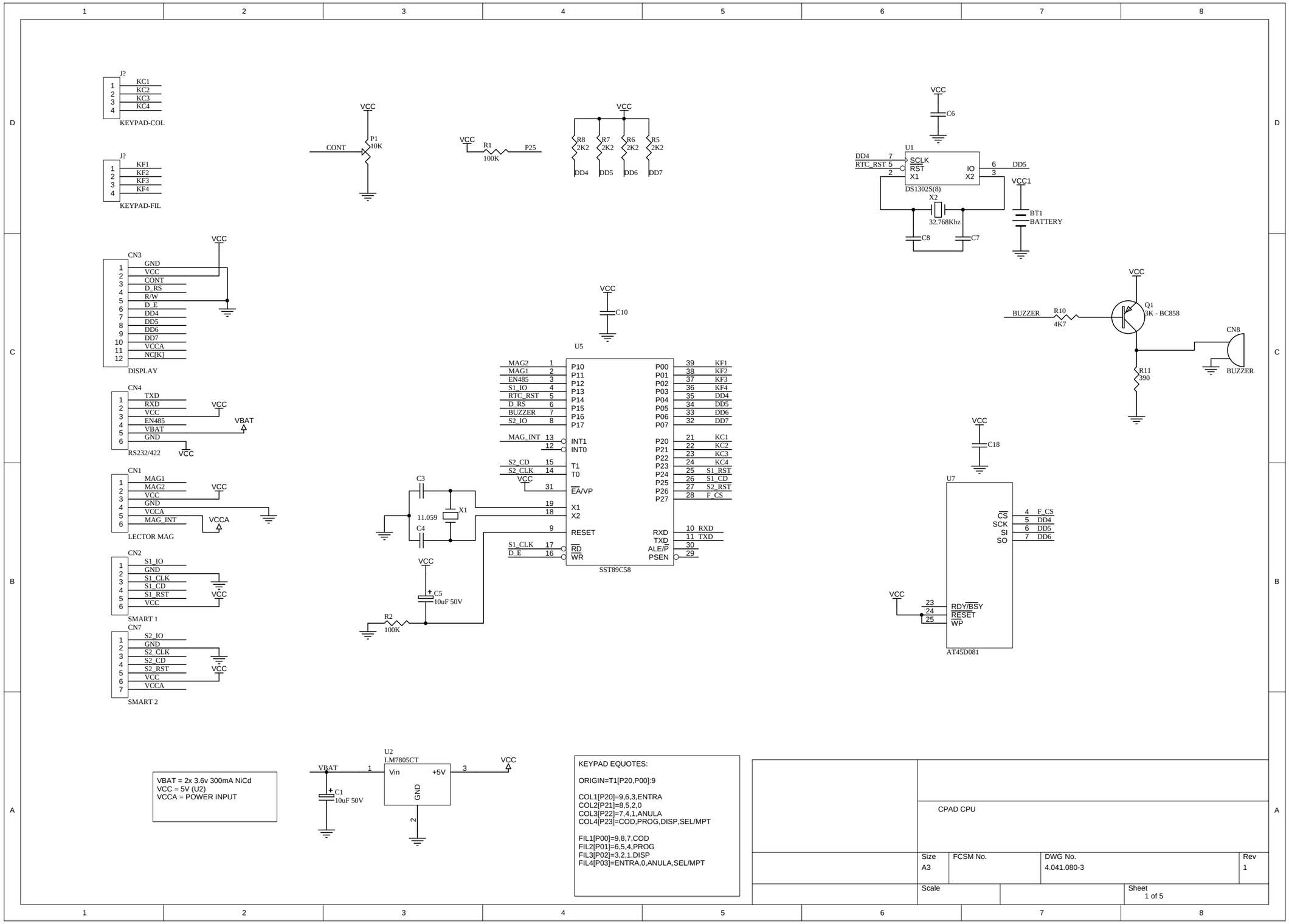
J?
KC1
KC2
KC3
KC4
KEYPAD-COL
J?
KF1
KF2
KF3
KF4
KEYPAD-FIL
VCC
CONT
P1
10K
VCC
R1
100K
P25
VCC
R8 2K2
R7 2K2
R6 2K2
R5 2K2
DD4
DD5
DD6
DD7
VCC
C6
U1
DD4
RTC_RST
SCLK
RST
X1
IO
X2
DD5
DS1302S(8)
X2
32.768Khz
C8
C7
VCC1
BT1
BATTERY
CN3
GND
VCC
CONT
D_RS
R/W
D_E
DD4
DD5
DD6
DD7
VCCA
NC[K]
DISPLAY
VCC
C10
U5
MAG2
MAG1
EN485
S1_IO
RTC_RST
D_RS
BUZZER
S2_IO
MAG_INT
S2_CD
S2_CLK
S1_CLK
D_E
P10
P11
P12
P13
P14
P15
P16
P17
INT1
INT0
T1
T0
EA/VP
X1
X2
RESET
RD
WR
P00
P01
P02
P03
P04
P05
P06
P07
P20
P21
P22
P23
P24
P25
P26
P27
RXD
TXD
ALE/P
PSEN
KF1
KF2
KF3
KF4
DD4
DD5
DD6
DD7
KC1
KC2
KC3
KC4
S1_RST
S1_CD
S2_RST
F_CS
RXD
TXD
SST89C58
VCC
BUZZER
R10
4K7
Q1
3K - BC858
CN8
BUZZER
R11
390
CN4
TXD
RXD
VCC
EN485
VBAT
GND
RS232/422
VCC
VBAT
VCC
C18
CN1
MAG1
MAG2
VCC
GND
VCCA
MAG_INT
LECTOR MAG
VCC
VCCA
C3
11.059
X1
C4
VCC
C5
10uF 50V
R2
100K
U7
CS
SCK
SI
SO
F_CS
DD4
DD5
DD6
RDY/BSY
RESET
WP
AT45D081
VCC
CN2
S1_IO
GND
S1_CLK
S1_CD
S1_RST
VCC
SMART 1
VCC
CN7
S2_IO
GND
S2_CLK
S2_CD
S2_RST
VCC
VCCA
SMART 2
VCC
VBAT = 2x 3.6v 300mA NiCd
VCC = 5V (U2)
VCCA = POWER INPUT
U2
LM7805CT
VBAT
Vin
+5V
GND
VCC
C1
10uF 50V
KEYPAD EQUOTES:
ORIGIN=T1[P20,P00]:9
COL1[P20]=9,6,3,ENTRA
COL2[P21]=8,5,2,0
COL3[P22]=7,4,1,ANULA
COL4[P23]=COD,PROG,DISP,SEL/MPT
FIL1[P00]=9,8,7,COD
FIL2[P01]=6,5,4,PROG
FIL3[P02]=3,2,1,DISP
FIL4[P03]=ENTRA,0,ANULA,SEL/MPT
CPAD CPU
Size
A3
FCSM No.
DWG No.
4.041.080-3
Rev
1
Scale
Sheet
1 of 5

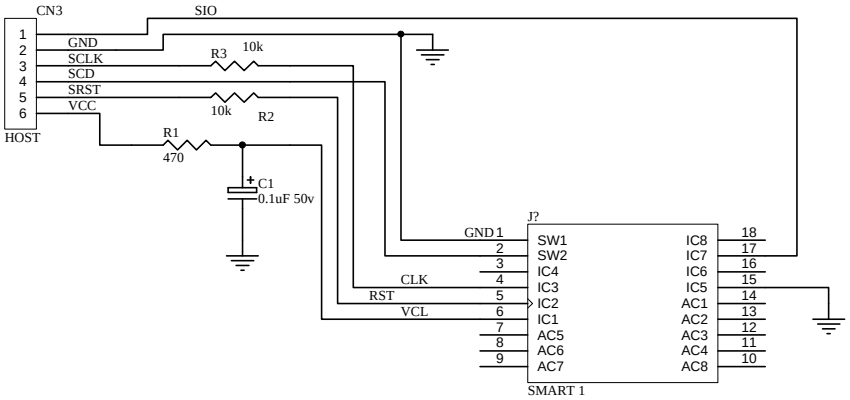


CPAD SMART CARD ADAPTER

| Size | FCSM No. | DWG No. | Rev |
|---|---|---|---|
| A4 | | 4.041.078-1 | B |

| Scale | | Sheet |
|---|---|---|
| | | 2 of 5 |

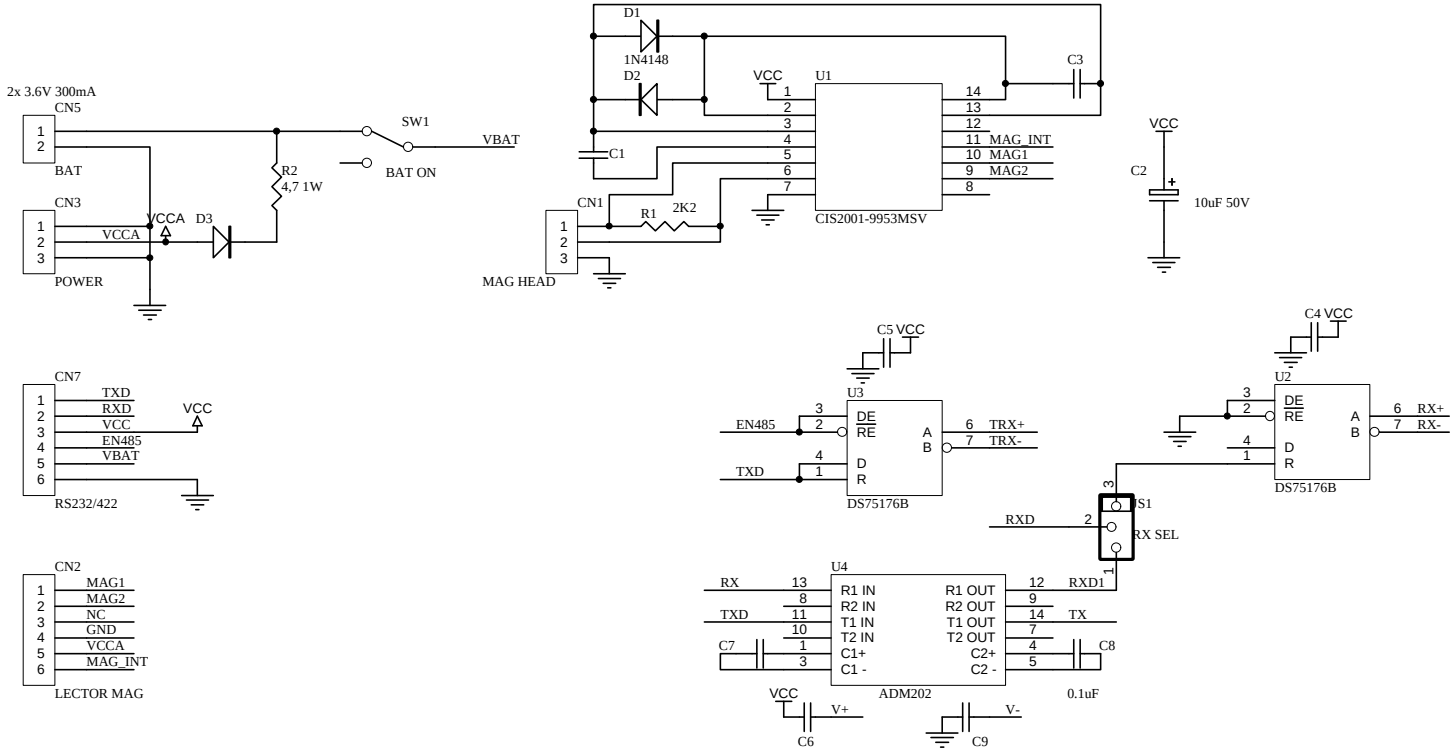


CPAD POWER/COM INTERFACE

| Size | FCSM No. | DWG No. | Rev |
|---|---|---|---|
| A4 | | 4.041.081-1 | 1 |

| Scale | | Sheet |
|---|---|---|
| | | 3 of 5 |

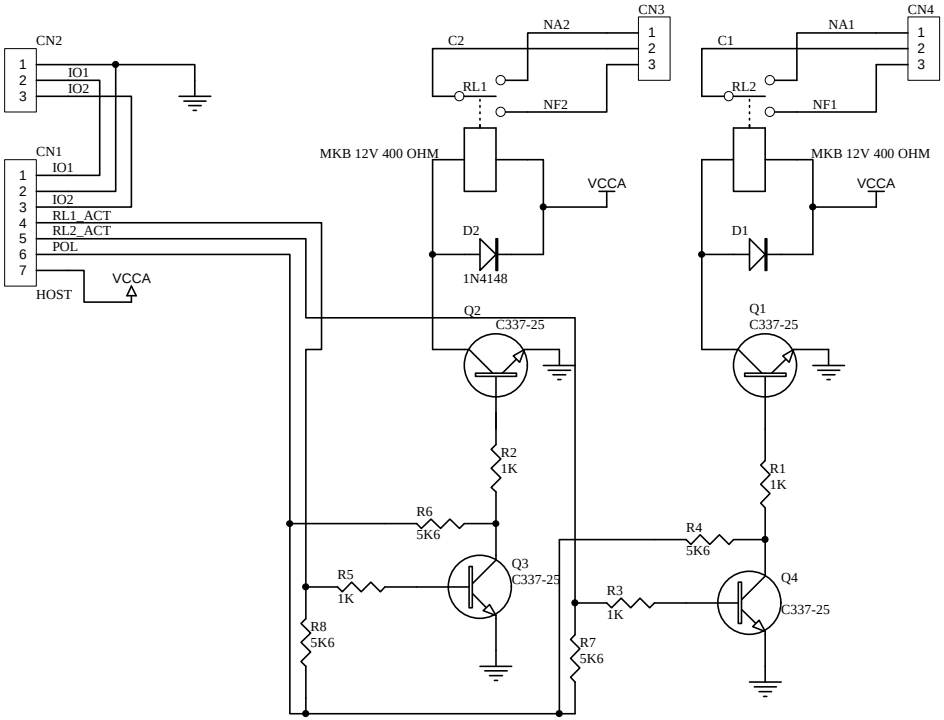


CPAD RELAY ADAPTER

| Size | FCSM No. | DWG No. | Rev |
|---|---|---|---|
| A4 | | 4.041.083-8 | 0 |

| Scale | | Sheet |
|---|---|---|
| | | 4 of 5 |