♦ The PathStar™ Access Server: Facilitating Carrier-Scale Packet Telephony

John M. Fossaceca, James D. Sandoz, and Philip Winterbottom

The maturation of large-scale Internet protocol (IP) routing and the standardization of voice over IP (VoIP) protocols have accelerated the deployment of packet telephony products in the public network. Service providers such as the Regional Bell Operating Companies, competitive local exchange carriers, multiple system operators, and Internet service providers (ISPs) are beginning to seek out next-generation products to consolidate voice, video, and data onto converged packet-based networks. To address this market, Lucent Technologies has developed and introduced a suite of data networking and packet telephony products, one of which is the PathStar™ Access Server. This revolutionary new product integrates Bell Labs software innovations such as the Inferno® operating system with access and interconnection technologies developed by the Switching, Access, and Data Networking areas of Lucent Technologies. The PathStar Access Server combines the functionality and features of traditional circuit switches with advanced packet routing techniques to enable end-to-end converged network solutions. This paper presents an overview of the PathStar Access Server and briefly explores its hardware and software architectures.

Introduction

This paper explores a product that enables network convergence to a greater degree than previously possible with either traditional voice switches or newer voice over Internet protocol (VoIP) products. The PathStar™ Access Server is the result of computing innovations from Bell Labs and the application of telecommunications expertise from Lucent Technologies' Switching, Access, and Data Networking groups. This equipment provides an end-to-end data and voice solution, which begins at the customer premises. As this paper will demonstrate, the PathStar Access Server is—unlike most VoIP or data products—a complete package: it terminates local subscriber loops, provides routing and switching, interconnects data and voice networks, and also offers the sophisticated administrative and billing tools desired by service providers.

The next two sections briefly examine the carrier network architectures in place today and describe the challenges service providers face in providing customers with enhanced voice and data solutions. The later sections of this paper present a description of the PathStar Access Server, a system overview, a high-level look at its hardware and software architectures, some sample configurations, and a look at future directions.

Background

Historically, voice traffic has been carried on circuit-switched networks consisting of digital switches and time division multiplexed (TDM) interoffice trunks. Subscriber "plain old telephone service" (POTS) calls are routed within the public switched telephone network (PSTN) by an intra-exchange network or handed off to a long-haul toll network using tandem switches. With the need to interconnect corporate local area networks (LANs) in the early 1980s, separate overlay packet networks—many specifically built to carry the transmission control protocol/Internet protocol (TCP/IP) suite—were put into place by ser-

Panel 1. Abbreviations, Acronyms, and Terms

AAL-5—ATM adaptation layer, type 5
ADSL—asymmetric digital subscriber line
AFM—ATM feeder multiplexer
AMA—automatic message accounting
ASIC—application-specific integrated circuit
ATM—asynchronous transfer mode
BAF—Bellcore Automatic Message Accounting Format
BGPv4—border gateway protocol, version 4
BORSCHT—battery feed, overvoltage protection, ringing, supervision, codec, hybrid, testing; loop plant switching functions
BRI—basic rate interface
CDR—call detail record
CE—Common Enterprise
CLIP—classical IP over ATM
COMDAC—common data and control
CP—call processor
cPCI—compact peripheral component interconnect
CPU—central processing unit
CSP—communicating sequential process
DLC—digital loop carrier
DMA—direct memory access
DRAM—dynamic random access memory
DS1—digital signal level 1, transmission rate of 1.544 Mb/s
DS3—digital signal level 3, transmission rate of 44.736 Mb/s
DSP—digital signal processor
DTMF—dual tone multifrequency
DVMRP—distance vector multicast routing protocol
E1—European carrier
EM—element manager
EOC—end of call
IETF—Internet Engineering Task Force
IGMP—Internet group management protocol
IP—Internet protocol
ISDN—integrated services digital network
IS—intermediate system
ISP—Internet service provider
ITU-T—International Telecommunication Union-Telecommunication Standardization Sector
LAN—local area network
LANE—local area network emulation
LCOS—Line Card operating system
MIB—management information base
MOSPF—multicast open shortest path first
NIC—network interface card
OA&M—operations, administration, and maintenance
OAM&P—operations, administration, maintenance, and provisioning
OSPF—open shortest path first
PBX—private branch exchange
PCI—peripheral component interconnect
PCM—pulse code modulation
PHY—Open System Interconnection physical layer
PIM-sparse—protocol independent multicasting, sparse mode
POTS—"plain old telephone service"
PPP—point-to-point protocol
PRI—primary rate interface
PSTN—public switched telephone network
QoS—quality of service
RAS—remote access server
RFC—Request for Comments, a standard of the Internet Engineering Task Force
RIP—routing information protocol
RSVP—resource reservation protocol
RTP—real-time protocol
SBC—single-board computer
SNMP—simple network management protocol
SOC—start of call
SONET—synchronous optical network
SS7—Signaling System 7
TCP—transmission control protocol
TDM—time division multiplexer
TOS—type of service
TTP—trunk-to-trunk protocol
UDP—user datagram protocol
VoIP—voice over Internet protocol
WAN—wide area network

vice providers. At first, these "overlay networks" were easy to manage, because the base of business users needing wide area network (WAN) services was at that time small.

The picture began to change in the late 1980s, however, with the ballooning desire to interconnect corporate backbones. This in turn drove the development and implementation of new technologies such as

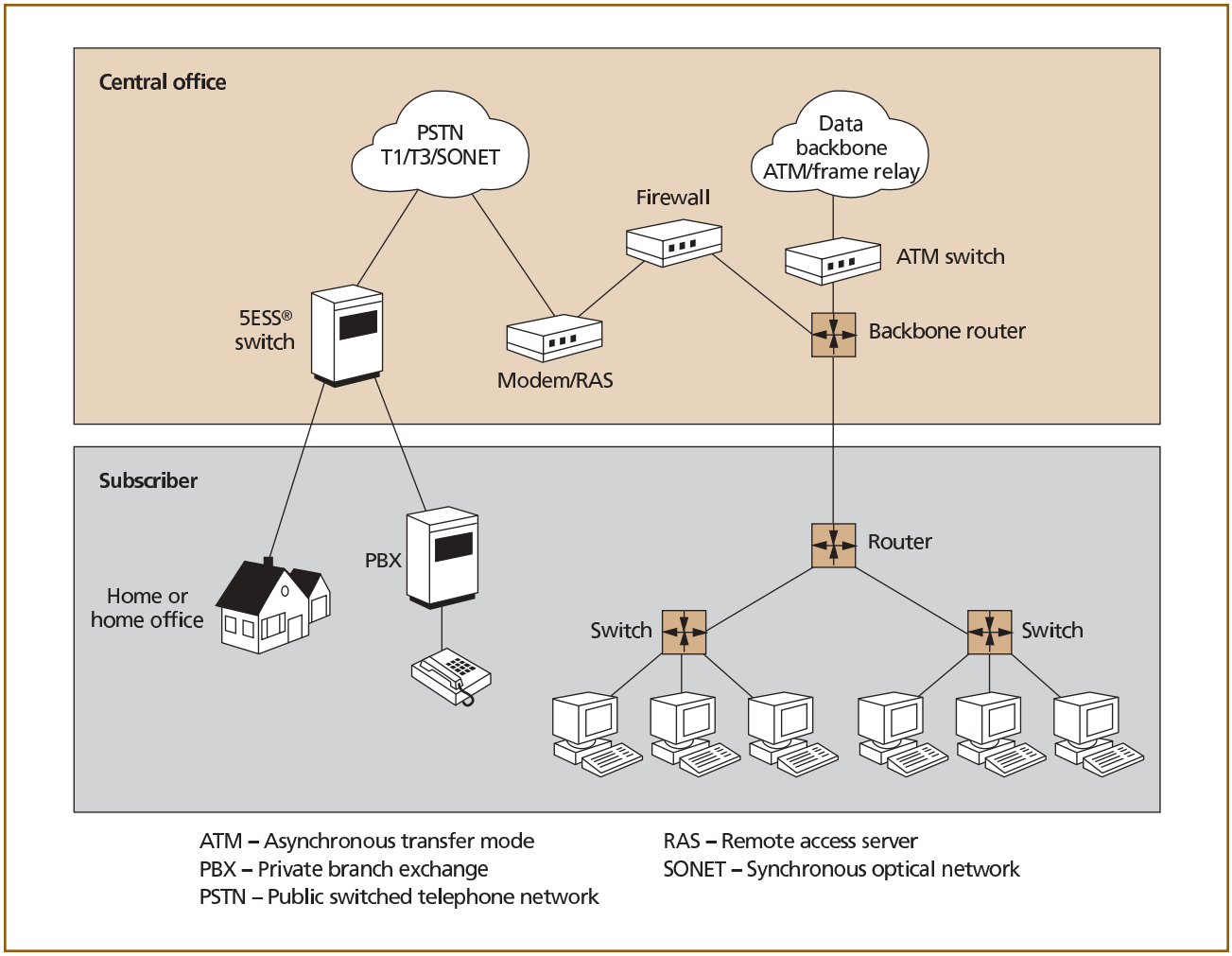

Figure 1.
Today's network architecture.

frame relay and asynchronous transfer mode (ATM). During that period, packet-based data equipment gained a respectable foothold in the historically voice equipment-centric central offices of service providers. More recently, however, the explosive growth of individual Internet usage has greatly accelerated capital investment in data transport hardware. Attending to this rapid growth has led the service providers to the following reactive, iterative process. First, service providers purchase additional circuit-switch-based subscriber access equipment to handle the large influx of requests for second POTS lines. Second, routers, switches, and similar "data-specific" equipment are brought in to manage the flow of Internet traffic from individual subscribers to Internet service providers (ISPs) and to the Internet. Finally, separate operations, administration, maintenance, and provisioning (OAM&P) systems are introduced to manage customer traffic, to provision equipment and data transport facilities, and to perform call routing, billing, and fault recovery. This process is then repeated every six months. More access lines lead to bigger switches and routers, and to additional administrative systems.

For example, dial-up remote access currently requires a large investment in both packet switching and circuit switching hardware. In today's network architecture, shown in **Figure 1**, a remote access server (RAS) functions as a bridge between a traditional circuit-switched network and a data network. A class 5 circuit switch, such as Lucent's 5ESS® switch, provides local loop access and converts analog signals into pulse code modulated (PCM) data samples. The

RAS takes inbound PCM channels, terminates point-to-point protocol (PPP) using banks of digital signal processor (DSP)-based modems, and then hands off IP data to a router for interconnection with the Internet.

Implications

In the last decade, service providers have constructed massive overlay data networks specifically suited to transporting packet-based data traffic. This situation poses serious economic issues. For example, this second infrastructure is expensive, in terms of equipment and operational administration. These factors appear on the bottom line of a service provider as increased operating costs. As Internet growth continues on a trajectory analogous to Moore's Law, it is clearly necessary to offer both voice and data services in a more economical fashion than the overlay network scheme currently allows. However, a service provider's goal of ubiquitous converged voice and data services using common equipment appears distant in light of today's product offerings. Even worse, current VoIP solutions generally entail interconnecting various pieces of equipment from numerous vendors. Meanwhile, existing multiservice products lack the system scalability, voice or data flexibility, hardware robustness, and OAM&P sophistication needed by service providers.

Finally, all the presently available "converged" voice and data solutions miss the mark in one important area—access. The packet-based telephony hardware currently being marketed does not terminate copper subscriber loops. Instead, service providers continue to rely on circuit-switch-based equipment for customer access—a situation Lucent's competitors are focused on changing. Clearly, something better is needed to address access for multiservice networks.

The PathStar Access Server

Lucent's answer to the need for subscriber access to converged voice and data networks is the PathStar Access Server. This product combines the functionality and features of traditional circuit switches with advanced packet routing techniques to enable end-to-end data and VoIP solutions. The PathStar Access Server terminates local subscriber loops, processes calls, routes TCP/IP packets containing voice or data, and interconnects to legacy voice and newer data networks as well. The PathStar Access Server makes it is possible to build an IP-only voice and data network or, just as easily, to construct a hybrid network that provides seamless interconnection with ATM networks and the PSTN. This application flexibility provides a migratory path for providers with circuit-switched infrastructure and a jump-on/jump-off PSTN capability for providers embedded with IP. In fact, service providers who wish to expand their current service offerings may find that the PathStar Access Server is a very economical solution and a natural progression as they evolve their networks toward a packet-based architecture. Using open protocol standards—such as TCP/IP, ATM, asymmetric digital subscriber line (ADSL) and H.323[1]—provides interoperability with existing and future network hardware. On the subscriber side, the PathStar Access Server supports narrowband interfaces such as POTS and integrated services digital network (ISDN), as well as broadband interfaces required for the latest ADSL services. Similarly, the product supports historical PSTN interfaces such as DS1 primary rate interface (PRI) and channelized DS3. For communications with data networks, a number of LAN and WAN interconnection methods are provided. As an edge vehicle, the PathStar Access Server supports the complete array of interfaces required for converging voice and data onto a TCP/IP-based packet network.

System Overview

The PathStar system consists of two primary types of components: switch modules and access modules. **Figure 2** presents a high-level view of the system architecture and its interfaces. The core of the system is the switch module. It provides:

- Layer 2 Ethernet switching and Layer 3 IP routing over a variety of physical media;
- IP over ATM, via local area network emulation (LANE), and classical IP over ATM (CLIP);
- DS1 and DS3 rate interconnection with the PSTN;
- Voice call processing, feature generation, and billing;
- H.323 gateway and gatekeeper functionality;
- An IP firewall and a RAS; and

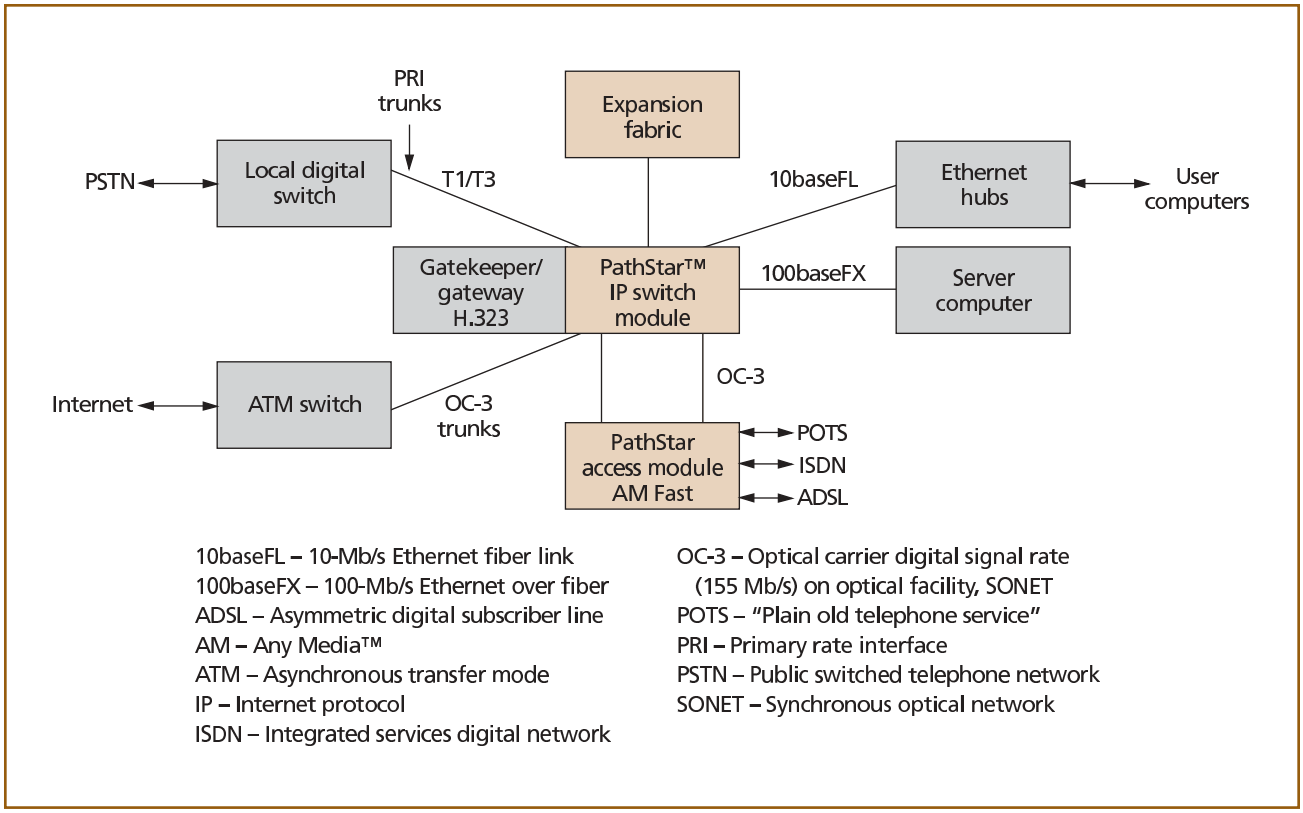

Figure 2.
The PathStar™ Access Server architecture.

- An OAM&P manager for switch modules and all connected subsystems.

As many as 14 access modules can connect to a single switch module. Each access module:

- Terminates copper subscriber loops using POTS, ISDN, and ADSL application packs;
- Converts analog data from POTS facilities to PCM data streams;
- Packetizes PCM data using real-time protocol (RTP) and IP; and
- Supports as many as 512 POTS lines and mixed POTS/ADSL configurations.

In addition to these two basic components, there is an optional expansion fabric that interconnects multiple PathStar Access Servers to form a larger-capacity switch. A typical PathStar configuration contains a number of access modules and a single data shelf. These two subsystems are examined below from the point of view of voice traffic flow.

Access Module

The PathStar Access Server directly terminates POTS, ISDN, and ADSLs using an access module derived from the 5ESS® and AnyMedia™ products. The access module, shown in **Figure 3**, provides mounting for as many as 16 access packs of several types. In the case of POTS, each pack provides 32 lines of BORSCHT functionality and 8-bit by 8-kHz analog-to-digital conversion. The resultant 64-kb/s PCM data streams are carried via the access module's narrowband backplane segment. These streams terminate on a circuit pack called the IP-COMDAC, or IP-based common data and control. A derivative of a design used in the 5ESS switch, the IP-COMDAC packetizes PCM encoded voice samples using RTP and IP. These VoIP packets are then transported to the data shelf via a 100baseFX Ethernet connection or a synchronous optical network (SONET) interface. Subscriber ISDN termination is provided in a similar manner, with basic rate interface (BRI) channels mapped into IP packets.

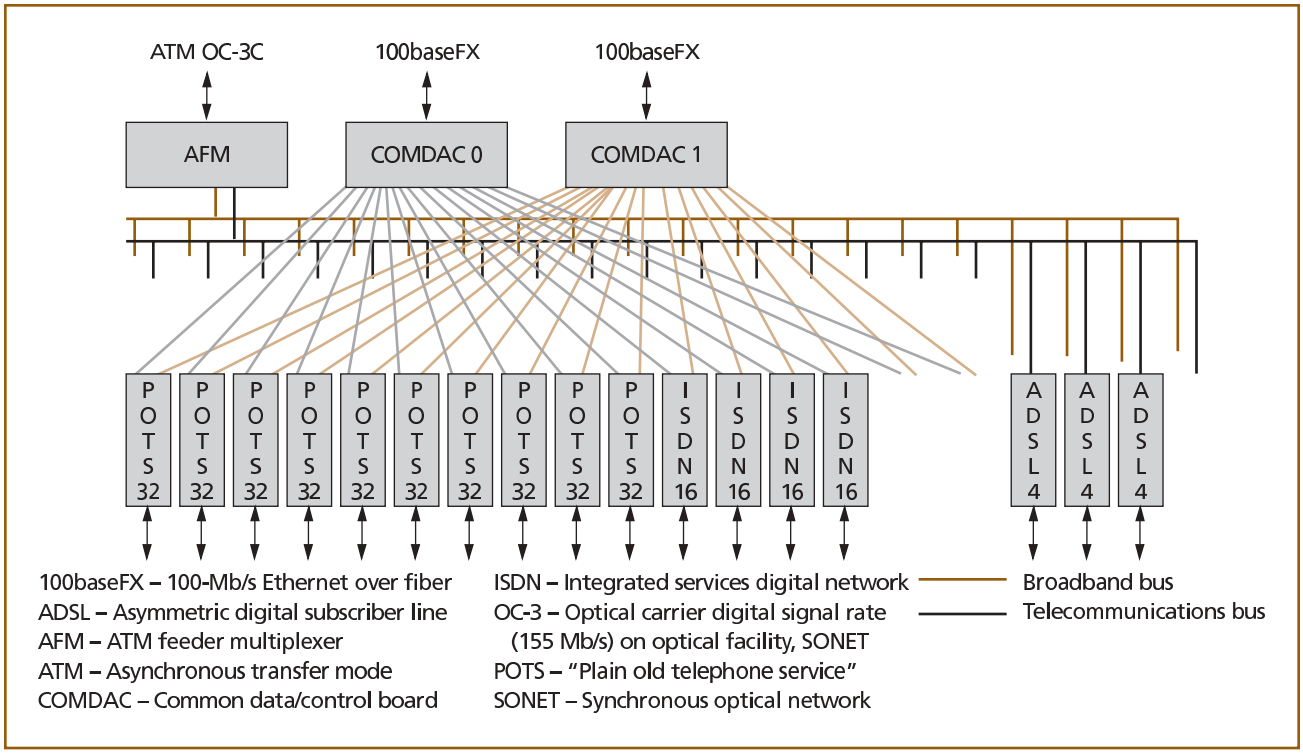

Figure 3.
The PathStar™ access module.

The ADSL access functionality is implemented somewhat differently. Incoming ADSLs are terminated on broadband ADSL application packs, where the ATM payloads are extracted. These ATM cells are then carried by a separate broadband segment of the access module backplane and terminate on a circuit pack called the ATM feeder multiplexer (AFM). The AFM performs ATM cell processing and virtual path identifier/virtual channel identifier address mapping, and provides a separate physical interface—specifically, at a digital signal level 3 (DS3) rate of 44.736 Mb/s—for transporting ATM cells to the switch module and/or to other terminating equipment.

An additional feature of the access module is its ability to directly terminate inbound modem connections. Service providers such as ISPs that provide modem dial-up can use an application pack called the DAC510. This application pack is equipped with a pool of powerful DSPs executing V.90 and/or k56Flex modem code. An important feature of this pack is that it is directly capable of terminating PPP traffic. In a manner similar to ADSL traffic, RAS sessions are back-hauled to the switch module using the broadband facilities of the AFM.

Several key features of the access module hardware warrant closer inspection. First and foremost, the access module leverages proven hardware from the telecommunication industry's most reliable switch—Lucent's 5ESS. Second, the high line density (32 POTS/card; 512 POTS/shelf; 3,000/cabinet; 750/ft^2) saves precious central office floor space and reduces the number of administrative objects. Third, the access module supports voice-only, ADSL-only, and mixed voice/ADSL configurations. This feature enables service providers to start out with a POTS-only configuration and then migrate toward broadband ADSL applications as the demand develops. Finally, the access module supports collocated and remote switch modules. This option allows the use of access modules in leased loop central offices or in digital loop carrier (DLC) applications. In summary, the access module hardware terminates POTS, ISDN, and ADSL copper loops, performing PCM-to-IP conversion as necessary, and streams IP packets toward the switch module, described below.

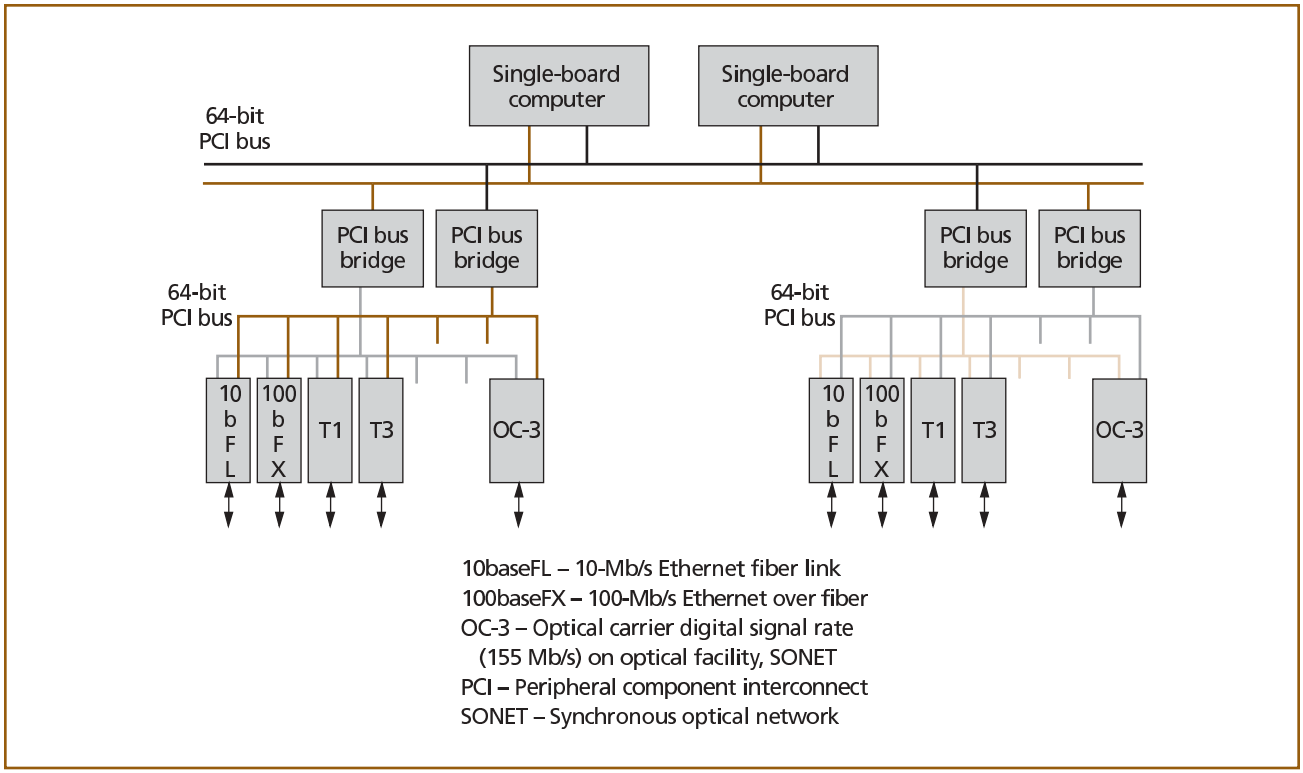

Figure 4.
The IP-based switch module.

Switch Module

The switch module, shown in **Figure 4**, is the focal point of the PathStar Access Server. Each switch module can terminate a number of access modules. The functionality of the switch module hardware includes IP routing, PSTN and ATM network interconnection, LAN and WAN interfaces, network timing synchronization, and system control. Taking a closer look at these requirements reveals that the hardware needs to:

- Perform the duties of an IP packet router,
- Exhibit the reliability of a circuit switch,
- Provide for interconnection with traditional PSTN facilities and support IP-based gateway/gatekeeper operations, and
- Perform call processing, feature creation, and billing.

The physical design of the switch module consists of a midplane chassis that accepts circuit packs from both the front and rear. The circuit packs located at the front of the chassis are called *routing engines*; these are described in detail below. The circuit packs located at the rear are termed network interface cards, or *NICs*, and each one presents a specific interface personality to its associated routing engine. Stated another way, the simplest switch module consists of a single routing engine and a single NIC. As additional routing engines and NICs are added, routing capacity and interface variety grow. The combination of a routing engine and a NIC is known as a line card set. This physical arrangement offers a number of benefits to service providers. From the perspective of reliability, the routing engine independence provides a high degree of fault tolerance. As faster routing engines are developed, service upgrades become trivial and do not require manipulation of facilities cabling.

In addition to providing mounting for as many as 16 routing engines and NICs, the switch module supports three other types of circuit packs, used for control, expansion, and synchronization. A pair of redundant CPU complexes handle control and functionality; a duo of bridge packs provides interconnection with an expansion fabric; and, finally, network synchronization is implemented by a circuit pack that accepts and distributes network clocks.

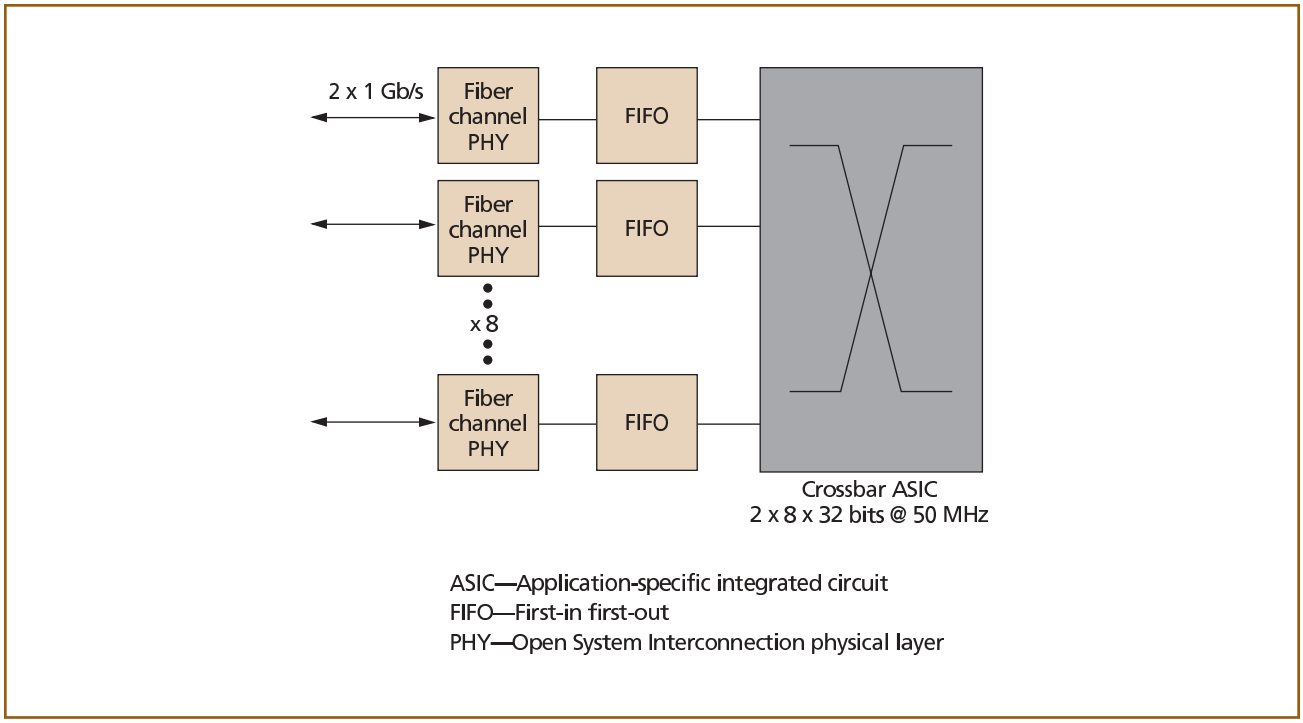

Figure 5.
The optical crossbar switch.

Expansion Fabric

The capacity of the current switch module is approximately 7,000 POTS lines. Researchers at Bell Labs have designed an expansion fabric using an optically connected crossbar switch to interconnect as many as eight switch modules. Using this optional fabric, a service provider can expand the system into larger line configurations. In addition to increasing capacity, multiple switch modules appear as one system from an OAM&P element management point of view. The optically connected crossbar switch shown in **Figure 5** has a fiber channel physical layer, a full-duplex 1-Gb/s link per switch module, and a field programmable gate array-based application-specific integrated circuit (ASIC).

Software Overview

This section describes the major components of the PathStar Access Server's software. Included in this discussion are the division of labor, routing function and fundamentals, packet processing, port types, shared memory and intercard message passing, operating systems, the quality of service (QoS) and billing strategies, OAM&P/element management, and call processing and vertical calling features. The IP-COMDAC software is also examined in detail.

Division of Labor

As the previous section described, the PathStar Access Server consists of an intelligent switch module and a number of access modules. Each switch module contains two Pentium*-based single-board computers (SBCs) and a number of line card sets. The switch module provides all routing functionality and external network interfaces. One SBC within the switch module, referred to as the *system controller*, executes routing algorithms and performs OAM&P functionality. The second SBC, the *call processor* (CP), provides H.323 gateway/gatekeeper functions such as call setup and teardown and also generates automatic message accounting (AMA) billing records. Vertical calling features such as call waiting, caller-id, and call forwarding are supported on the CP as well.

Routing Function

The PathStar Access Server data module performs bridging, routing, and gateway functions. Bridges connect networks at the data link layer to create a larger

physical network space. Routers operate at the network layer, which governs the passage of IP packets based on source and destination addresses. This allows the creation of larger logical networks. Gateways are used to convert network traffic from one protocol to another. PathStar provides Layer 2 switching (bridging) capability on its Ethernet interfaces and also contains a full H.323 and PRI software stack for IP-to-PCM protocol conversion. These features allow PathStar to exchange voice traffic with other VoIP gateways or with the PSTN.

On the switch module each line card set performs as an independent router, and each contains a fully populated routing table. The line card can route packets to network elements connected to its NIC or to other line cards over a pair of compact peripheral component interconnect (cPCI) buses. The route tables are formed on the SBC and propagated to all line card sets. If a particular packet is not routable based on the lookup table held within a line card set, it is dropped. The PathStar Access Server implements static routing; routing information protocol (RIP); open shortest path first (OSPF); border gateway protocol, version 4 (BGPv4); distance vector multicast routing protocol (DVMRP); protocol independent multicasting, sparse mode (PIM-sparse); and multicast open shortest path first (MOSPF). The PathStar switch module also implements full routing functionality, described in the section below.

Routing Fundamentals

A *router* is a device that receives an IP packet and forwards it to the appropriate destination, based on a set of routing rules stored in a table. When a packet is received, a netmask is logically applied, and the result is compared with the destination address. If there is a match, the packet is forwarded to the address specified in the Next Hop column of the routing table.

Routing tables are formed according to two fundamental method types: static and dynamic. In *static routing*, the routing table is set up manually to route packets to predefined locations. In *dynamic routing*, the routers use protocols to exchange information with each other about the way they are interconnected. *Interior routing* refers to protocols that ensure all networks can develop routes between them. *Exterior routing* protocols help internetworks develop routes with other internetworks.

Routers provide three basic types of packet forwarding: unicast, broadcast, and multicast. *Unicasting* forwards an individual packet to each recipient. *Broadcasting*, on the other hand, transmits a copy of the packet to all network destinations. *Multicasting* targets a specific group of recipients and uses a special protocol—called Internet group management protocol (IGMP)—to allow hosts to subscribe to a specific group.

The PathStar Access Server implements static routing tools and several interior and exterior routing protocols with support for multicast packet forwarding. The packet type is not important; whether it contains voice or data, it is routed in the same manner. Later this paper will show the advantages of prioritizing some types of packets.

Packet Processing

Layer 3 routing is handled by a routing table stored in the local memory of each line card. Certain types of line card sets can also provide Layer 2 switching without using the routing engine CPU. This is accomplished by using special-purpose hardware in the line interfaces to parse frame headers and look up destinations (for example, the Galileo* Ethernet device). On-the-fly compiled handler routines are used for packets routed by the routing engine CPU; these routines direct packets to specific output queues using very few instructions.

Software Port Types

The routing engine can assign six addressable types of ports:

- Physical NICs,
- Interfaces to software stacks (router),
- A packet sink (called a sink),
- Line cards (other routers),
- A crossbar (other switch modules), as shown in Figure 5, and
- Multicast (multiport).

Shared Memory and Inter-Card Message Passing

Each line card exposes a 16-MB region of shared dynamic random access memory (DRAM)—that is, this region is visible to all other line cards and SBCs. Packets are passed between line cards via the I2O* sys-

tem using direct memory access (DMA) facilities. Writes are more efficient to perform than reads on the cPCI bus, because the bus must be accessed twice as many times for a read as for a write. Instead, a "push" methodology exploits the shared memory region, avoiding the need to execute reads across the bus during message passing.

PathStar Operating Systems

The two types of software used in the PathStar Access Server are the Inferno® operating system and the Line Card operating system (LCOS), both of which are described below.

The INFERNO® operating system. Inferno is a distributed real-time network operating system invented at the Bell Labs Computing Sciences Research Center to support advanced network applications. Its programming language, Limbo®, is C like in its constructs, with very strict type checking and facilities for communicating sequential processes (CSPs) built in to support parallelism. In addition, the STYX® protocol, which provides Inferno with a very secure network management tool interface and secure remote mount capabilities, made it an ideal choice for this project.

To support the PathStar Access Server, the Inferno kernel was modified by adding a special device driver to communicate with the Inferno TCP/IP stack. An interface device driver section called "devtrip" takes care of the I2O messaging, the STYX interface, and other functions required for line card control. Environmental management is supported by devlm78, an environmental monitoring device driver for the National* LM78 integrated circuit.

At the application level, several Limbo programs were developed to handle craft interfaces for configuration and control of various parts of the system. The PathStar Access Server team added the following extensions to the Inferno operating system:

- An http daemon with Limbo cgi support;
- TCP/IP tools, such as telnet daemon, snmp daemon, and the udp helper;
- Routing protocol control modules, including:
  - Static route ctl
  - rip ctl
  - bgpiv ctl
  - ospf2 ctl
  - pim ctl
  - mospf ctl, and
- Craft interface graphical user interfaces using the Inferno window manager.

Line Card operating system (LCOS). Both the switch module line cards and access module COMDAC use LCOS, a scaled-down real-time executive that includes Inferno/Plan 9-type process scheduling. LCOS was developed at Bell Labs as a lightweight operating system suitable for distributed network applications and was intended for removing the overhead and inflexibility often associated with other real-time embedded operating systems. LCOS provides port services for several types of interfaces, such as Ethernet, ATM, DS1, and the PathStar routing engines. LCOS also supports four types of TCP/IP packet routing services—high priority, best-effort, unspecified, and type of service (TOS).

Quality of Service (QoS) Strategy

The PathStar Access Server implements a straightforward scheme for QoS. It simply extracts TOS information from incoming IP packets and sets up a series of prioritized queues. These queues can control packet flow based on a subjective "class of service" value, which allows PathStar to prioritize voice data, for example, and to move fax data to a lower priority, thereby minimizing delay on real-time information at the expense of less time-critical information.

Billing Strategy

The PathStar Access Server software provides billing compatible with typical PSTN accounting schemes. The switch module generates AMA records and interfaces with standard Lucent billing products such as the BILLDATS® data server, which acts as a billing collector. Typically, PathStar generates billing records only for POTS calls originating on the local system.

The call processing system sends start of call (SOC) and end of call (EOC) records to the billing client via a software communications channel. The EOC record contains either the time stamp for call termination or the value of the call duration. The billing client discards the SOC and only uses the EOC for billing purposes. The billing client then formats the EOC call detail record (CDR) into a Bellcore Automatic Message Accounting Format (BAF) record, opens a TCP socket

connection to the data server, and sends AMA records across it. If the connection goes down, the billing client will reestablish the connection and re-synchronize with calls in progress on the data server. If the connection cannot be reestablished, the billing client stores the information in a designated directory for later transmission. A noncritical alarm is sent to the appropriate operations, administration, and maintenance (OA&M) system.

OAM&P/Element Management

The Element Management System uses Lucent's OneVision® platform. The system interfaces to the switch module via the STYX protocol. The PathStar element manager (EM) maintains a central database, and each switch module, in turn, maintains the current state of its subsystem (that is, the switch module and all connected access modules). Before each transaction begins, the EM and the data shelf perform a handshake. The only exception to this is when a customer-initiated change or a craft interface update is performed on the switch module directly. In that case, the switch module will set a flag and notify the EM that a change has been made. The EM will then go through a data synchronization process.

The simple network management protocol (SNMP) has become an industry standard for managing network elements. The controlling SNMP element contains software called an SNMP manager. The client or controlled device contains an SNMP agent. Although SNMP is not a very secure protocol, later versions of it, such as v2 and v3, use more secure communication methods. Standardization has been slow, however, because of dissension among industry players.

The PathStar Access Server uses the STYX interface protocol, a standard feature of the Inferno operating system. As with SNMP, STYX is based on a client-server model for message passing. Unlike SNMP, however, the STYX server exposes a hierarchical file system, and all communication is executed by simple read and write functions. A communication path called a connection server is established between the client and server. Similar to Inferno's operations, the server's file tree is mounted to a name space in the client device to provide simple file-oriented operations for message passing between network entities. Moreover, STYX has built-in security options and authentication, including the secure hash algorithm and RC4 encryption.

To permit interconnection of standard network management stations to the PathStar Access Server, an SNMP agent and appropriate management information bases (MIBs) were added. The functionality of SNMP, however, was intentionally limited to monitoring functions only. Full OAM&P element management is only possible through the STYX interface to ensure system-level security against hacking.

An SNMP MIB is a set of variables or parameters accessed by the element manager through the SNMP protocol. SNMP defines a standard set of MIBs. Most managed devices such as routers, switches, and similar network elements also contain proprietary MIBs developed by the device or software manufacturer. These are organized into databases using a tree structure. To avoid duplication of software and to organize the OAM&P parameters, MIBs are used for both the SNMP and the STYX protocol; the MIBs used in the STYX protocol are mapped into a STYX hierarchical file structure. The "get" and "set" commands of SNMP roughly correspond to the reads and writes of Inferno/STYX. In this manner, either protocol can be used for manipulating (STYX only) or monitoring (STYX and SNMP) individual element data using the same MIB database. Aside from security, STYX offers other advantages over SNMP. One such example is *client name space scalability*, that is, the ability to modify the underlying structure of a system without massive software rework. File systems can be dynamically mapped, whereas the structured SNMP MIBs must be completely predefined.

Industry-standard MIBs are formally maintained by the Internet Engineering Task Force (IETF). A subset of the MIBs that the PathStar system supports are:

- MIB II (Request for Comments [RFC] 1213),
- MIB II digital signal level 1 (DS1)/European carrier (E1) Interface MIB (RFC 1406),
- A subset of Common Enterprise (CE) Standard Telecommunications Management Network definitions MIB (based on ITU-T X.731),
- CE Element State and Inventory MIB (based

on ITU-T X.731),

- CE Element Alarms MIB (based on ITU-T X.733),
- CE Element System Log MIB (based on ITU-T X.735),
- Frame Relay Interface MIB (RFC 1315),
- ISDN MIB (RFC 2127),
- SONET Interface MIB (RFC 1595), and
- OSPF MIB (1850).

Call Processing and Vertical Calling Features

The CP SBC on the switch module performs call processing and supports vertical calling features. The PathStar system uses a special messaging method called the trunk-to-trunk protocol (TTP) to set up calls and manage the various state machines in the system. Calls between access shelves are sent from an originating state machine to a terminating state machine. For example, when a provisioned line goes offhook, the originating state machine is started. After digit collection is completed, the number is examined by the provisioning database. If the number belongs to another access shelf, a series of TTP messages such as "Ring" are generated, and the called access shelf will start a terminating state machine. Dialed numbers that do not belong to an access shelf will be routed to the appropriate destination (for example, terminating dialed numbers within the PSTN will be routed through the PRI interface or some other trunk type).

The line card that supports the PRI interface runs a stack containing ISDN call control, Q.931,[2] and Q.921[3] over a DS1/DS3 network interface. Shortly after the first release of the product, a complete Signaling System 7 (SS7) stack will be implemented, allowing the PathStar Access Server to perform common channel signaling and associated functions.

PathStar implements a subset of standard 5ESS calling features, including the North American Dialing Plan. Because they were considered most crucial to our target customers, we chose to implement these features:

- Basic POTS,
- Call waiting,
- All types of calling number delivery (that is, name, number, call waiting),
- Call forwarding line busy,
- Service codes x11,
- Basic emergency service,
- Distinctive ringing class services,
- Call forwarding variable, and
- Multipoint conferencing.

Other features are also planned for release 1.0 of the PathStar Access Server.

A typical sequence of events for a call would be as follows:

1. The handset goes off-hook.
2. The CP SBC turns on dial tone on the access shelf.
3. The CP SBC turns on digit collection/dual tone multifrequency (DTMF) detection on the access shelf.
4. The CP SBC initiates a call (creates an entry in the call connection table).
5. The Call setup procedure is executed.
6. Once the call is established, setup RTP streams. This is just a route connection table from the access module through the switch module to the T1/PRI NIC.
7. When either end goes on-hook, CP SBC launches the CP teardown sequence.

In addition to the PRI interface, an H.323 gateway based on the elemedia® telecommunications software stack is modeled as a trunk interface and is used to allow communication with other H.323 gateways in the network. The gatekeeper contains a call control module that supports call setup and teardown (Q.931[2]), state machining for call progress functions and IP message generation (H.245[4]), client-side RAS (gateway-to-gatekeeper communication). The gatekeeper is an entryway for signaling within the stack resource and admission control.

Access Module Software

The access modules consist of application packs and IP-COMDAC packs. The access module provides the PCM-to-IP conversion and subscriber termination for POTS and ISDN. It also functions as the RAS and has built-in ATM transport facilities that support high-speed data for ADSL functionality.

As this paper described earlier, the access module provides the PCM-to-IP and IP-to-PCM conversion functionality, or data transport, for high-speed data traffic. The IP-COMDAC receives the PCM traffic from

the line cards (for example, LPZ-100 POTS application packs), wraps the PCM digital data in an RTP header, and packetizes the result using IP. The access module performs number recognition, DTMF generation, and tone generation—such as fast busy—on a complement of DSPs.

Each COMDAC has one IP address and 512 dialed numbers (that is, TTP endpoint identifiers). Each call in progress has a unique user datagram protocol (UDP) source and destination IP and port address. When a call is established, a free list is constructed to manage call queues. UDP packets generated by the call processing SBC control the COMDAC.

The data path in the access module has an Ethernet driver processed into UDP that forms the set of call queues. One queue is set up per call. The data structure includes the following elements:

- The media access control (MAC) header,
- The IP header,
- The UDP header,
- The RTP header (time stamp),
- The sequence number, and
- PCM samples.

To avoid the need for extra echo cancellation processing, we used PCM samples about 60 bytes in length with overhead of about 8 ms. The design goal is to keep the overall end-to-end delay less than 150 ms. We introduced a jitter buffer to compensate for differential delays in the IP network. The jitter buffer is roughly twice the length of size of the expected packet arrival time variance. A permanent one buffer "packet behind" length of 50 ms is maintained, leading to a total delay of 120 to 130 ms. If we assume 100- to 500-kilopacket/sec throughput in the data shelf, compression is not needed to avoid end-to-end echo problems.

A single COMDAC can handle 192 simultaneous calls. We ensure availability by using a scheme called ACTIVE/STANDBY, which requires two COMDACs. One COMDAC can process all the calls and handle a full load. If the first COMDAC fails, the standby COMDAC can transfer all active calls to itself. Other schemes such as ACTIVE/ACTIVE are possible, where both COMDACs share the load. When one COMDAC goes down, the other can either transfer the active calls from the bad COMDAC to itself, or let those calls drop. The remaining COMDAC would then attempt to process all subsequent initiated calls.

A set of universal asynchronous receiver/transmitter messages packaged into UDP packets is used to handle telephony control functions. The connection table is maintained for the calls, and the system is controlled by the CP SBC on the switch module.

Sample Configurations

In addition to acting as a hop-on/hop-off bridge between the circuit-switching and packet-switching worlds, the PathStar Access Server can solve a variety of networking problems. For example, **Figure 6** shows a data/voice application of PathStar using 160 POTS lines. In small campus business or private branch exchange (PBX) applications, POTS lines provide a single connection (backhaul) to the network and eliminate the need to buy a PBX, firewall, router, and switch.

To implement ADSL, the IP is carried over PPP and transported over the broadband bus using ATM adaptation layer, type 5 (AAL-5), as shown in **Figure 7**. Eventually, a point of presence could be established within the PathStar Access Server, as shown in **Figure 8**. This type of configuration is ideal in a central office designed to converge voice and data traffic with a minimum of equipment. IP routing, firewall, and RAS functions, as well as conventional voice call processing, can be encapsulated within a single platform.

In the future, as more voice traffic flows through data networks, QoS demands will be placed on the network to schedule telephony traffic in a way that will minimize delays. The protocols used to schedule trunks (that is, reserve bandwidth) could be resource reservation protocol (RSVP), differentiated services, or some other IETF standard.

Future Directions

Currently, research is continuing and architectures are being formulated for the PathStar Access Server, which will include a wireless version, an ATM switch version, and a cable access version. These architectures are now in the very early design stages. PathStar could also be used in conventional networks as a 1A switch replacement. A version compatible with SS7 is already

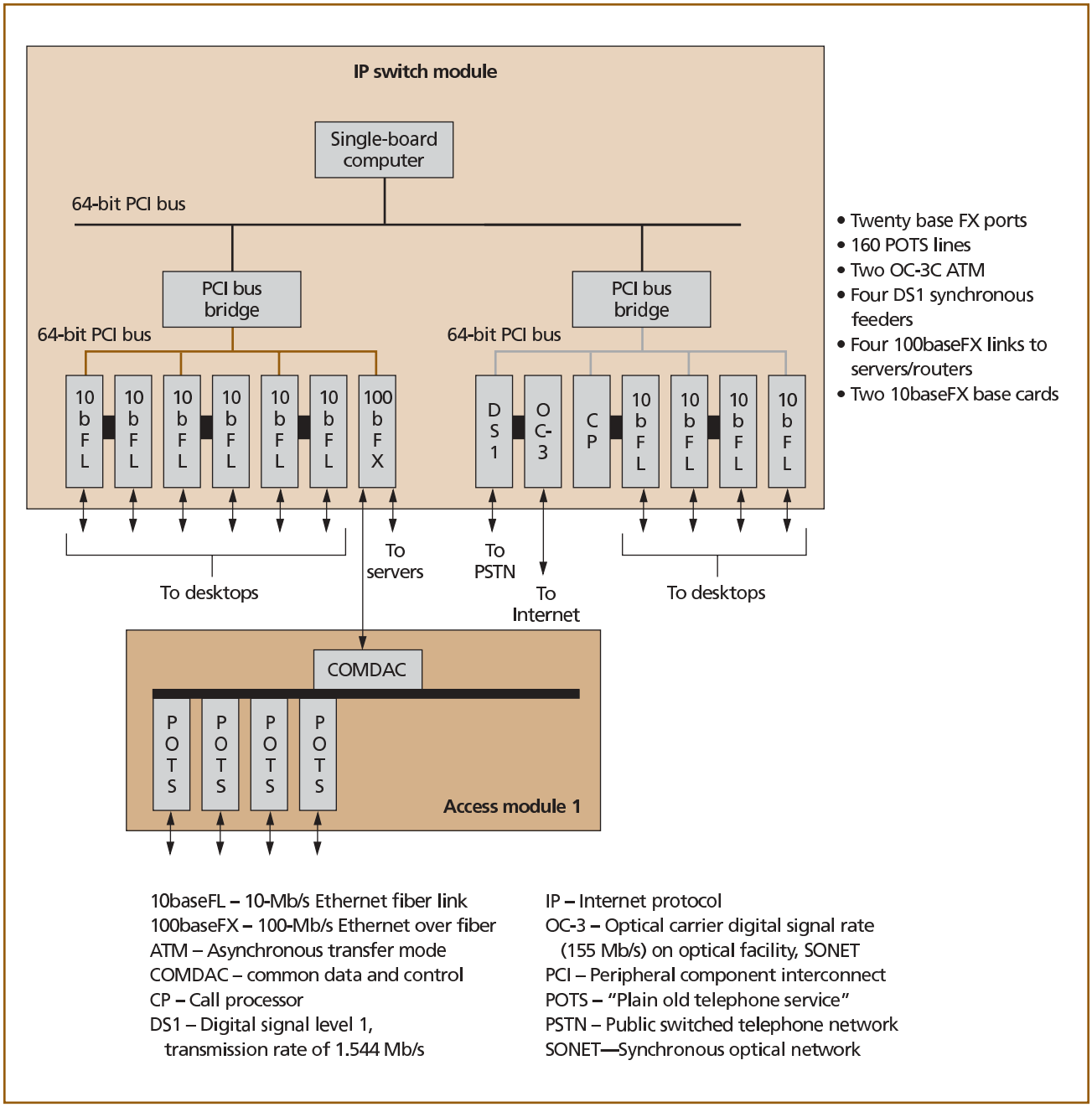

Figure 6.
A data/voice application of the PathStar™ Access Server.

being developed, because SS7 common channel signaling is less expensive and more reliable than trunk signaling. It can be used to provide customers with an out-of-band hop-on or hop-off signaling method. Future versions of the PathStar Access Server will support international standards, provide more interfaces such as the ISDN, and have increased built-in reliability.

Conclusions

The Pathstar Access Server is unique, because it offers scalable capacity and excellent performance at a competitive cost. Its integrated Internet telephony gateway with built-in broadband access provides customers with a product that fills a growing need in today's network evolution. Of course, the success of

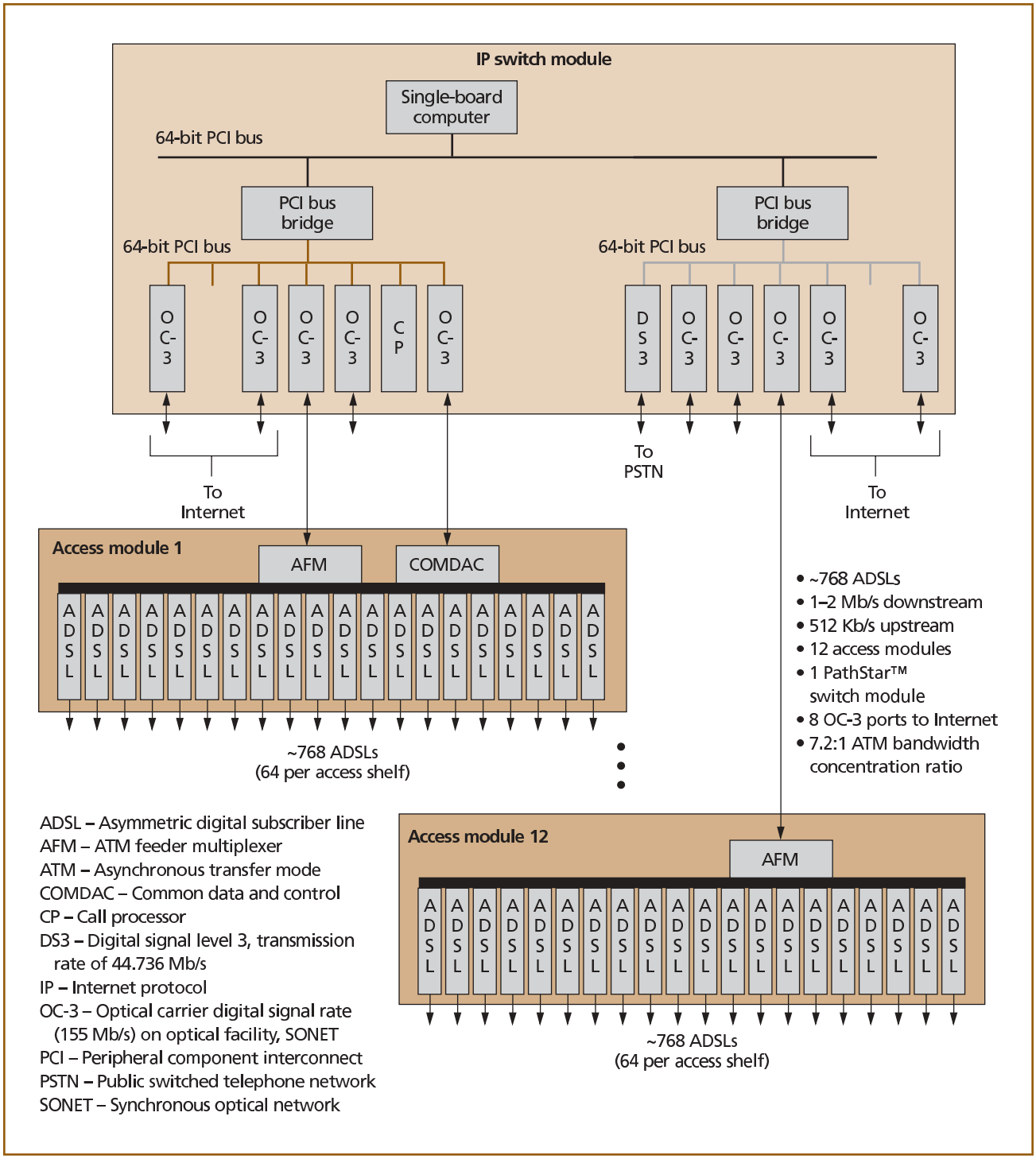

Figure 7.
An ADSL application of the PathStar™ Access Server.

PathStar also depends on other evolving components of the network. For example, QoS demands will be placed on the "data cloud." PathStar itself will need to address larger-scale network configurations and to continually improve its architecture to meet reliability expectations. In its current configuration, however, the PathStar Access Server will help customers either evolve current circuit-switched networks to handle

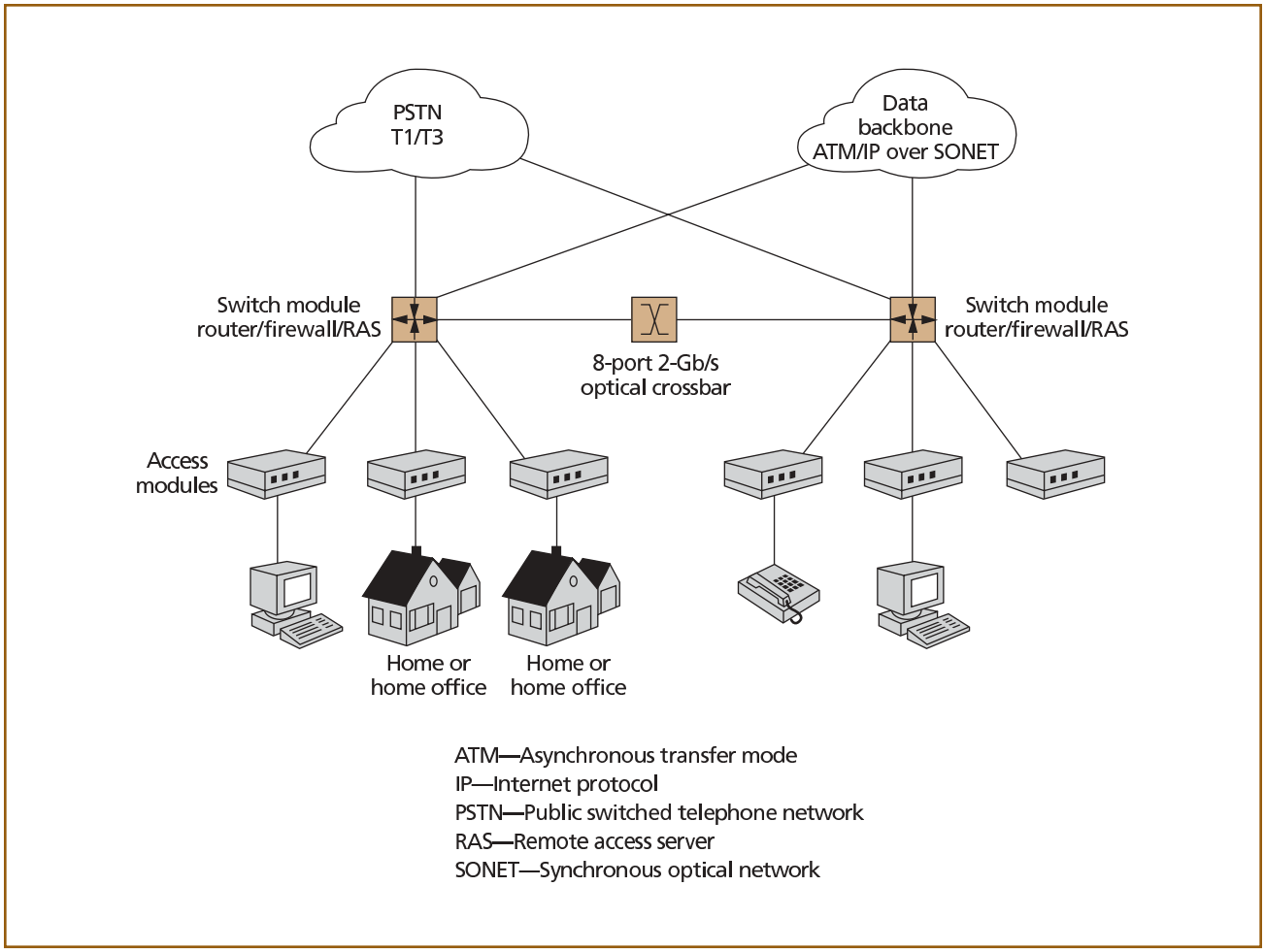

Figure 8.
A PathStar™ Access Server point of presence.

increasing traffic loads more efficiently and/or build new converged voice and data networks.

Acknowledgments

We thank Aninja Basu, Dave Presotto, Ken Thompson, John Venutolo, and Tom Stanik of the Bell Labs Computing Sciences Research Center for their significant contributions to the original PathStar Access Server design. They continue to participate actively in the development of the project today. We also thank Philip Stanley-Marbell and Kai Xu of Tekmark Inc. for acting as a valuable information bridge between the research team and the product team, especially in the area of Inferno-related technology.

*Trademarks

Galileo is a registered trademark of Galileo Technology, Inc.

I2O is a trademark of PLX Technologies.

National is a registered trademark of National Semiconductor Corporation.

Pentium is a registered trademark of Intel Corporation.

PowerPC is a trademark of International Business Machines Corporation.

References

1. ITU-T H.323, *Packet-based Multimedia Communications Systems*, Feb. 1998.
2. ITU-T Q.931, *Digital Subscriber Signaling System No. 1 (DSS 1)—ISDN User-Network Interface Layer 3 Specification for Basic Call Control*, Mar. 1993.
3. ITU-T Q.921, *ISDN User-Network Interface—Data Link Layer Specification*, Sept. 1997.
4. ITU-T H.245, *Control Protocol for Multimedia Communication*, Feb. 1998.

(Manuscript approved December 1998)

JOHN M. FOSSACECA is a technical manager in the

Carrier Data Networking Group at Murray Hill, New Jersey, where he currently manages the PathStar™ Access Server Core Software Development Team. His interests are in real-time embedded software development and communications software. Mr. Fossaceca received a B.E. from Manhattan College in New York City and an M.S. from Syracuse University in New York, both in the field of electrical engineering.

JAMES D. SANDOZ is a technical manager with the

PathStar™ Access Server Group, part of Lucent's Data Networking Group at Red Bank, New Jersey. His interests include converged network architectures, physical design of telecommunications equipment, and embedded systems. Mr. Sandoz attended Drexel University in Philadelphia, Pennsylvania.

PHILIP WINTERBOTTOM is a distinguished member of

technical staff in the Computing Sciences Research Department at Bell Labs in Murray Hill, New Jersey. He works in the areas of compilers, languages, operating systems, and networking hardware, and is the chief architect of the PathStar™ Access Server. Before coming to Bell Labs, he attended Kings College in London, England, and then continued on to the City University of London, where he was a Lloyds Research Fellow building parallel computers. ◆