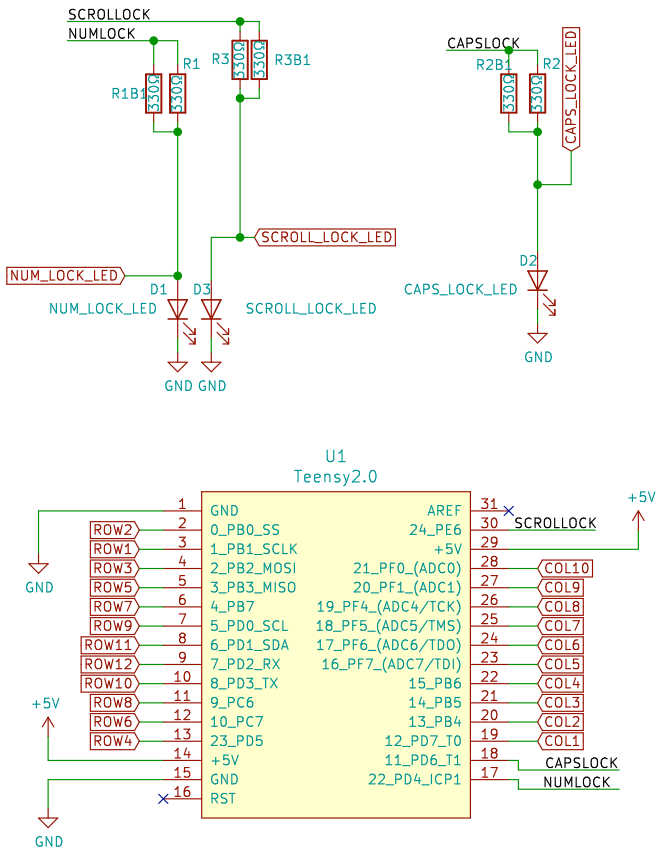

Sheet: KeyboardMatrix

File: KeyboardMatrix.sch

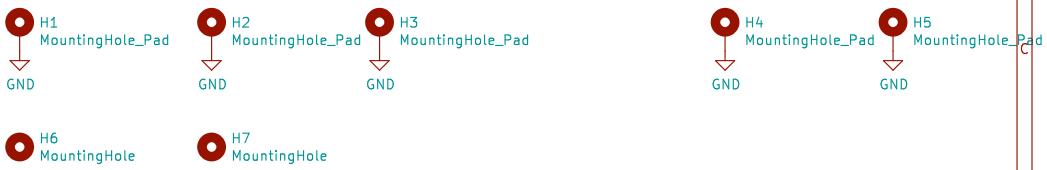

Sheet: /
File: keyboard.sch

Title:

Size: A4	Date:	Rev:
KiCad E.D.A. kicad (5.1.2-1)-1		Id: 1/2

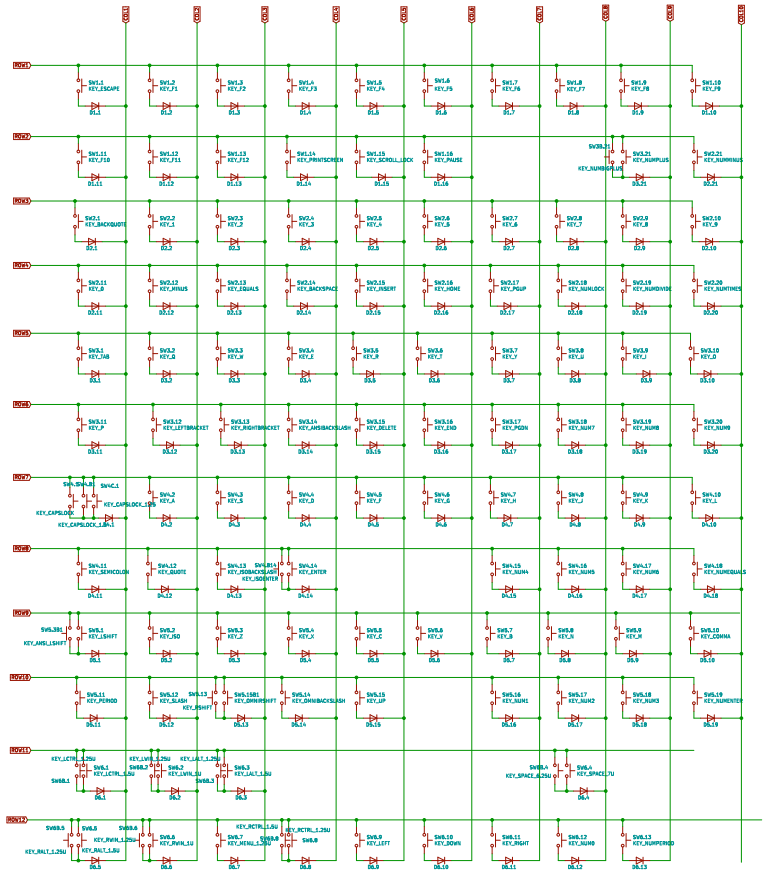

Sheet: /KeyboardMatrix/
File: KeyboardMatrix.sch
Title:
Size: A1 | Date: | Rev: id: 2/2
KiCad E.D.A. kicad (6.1.2-1)-1