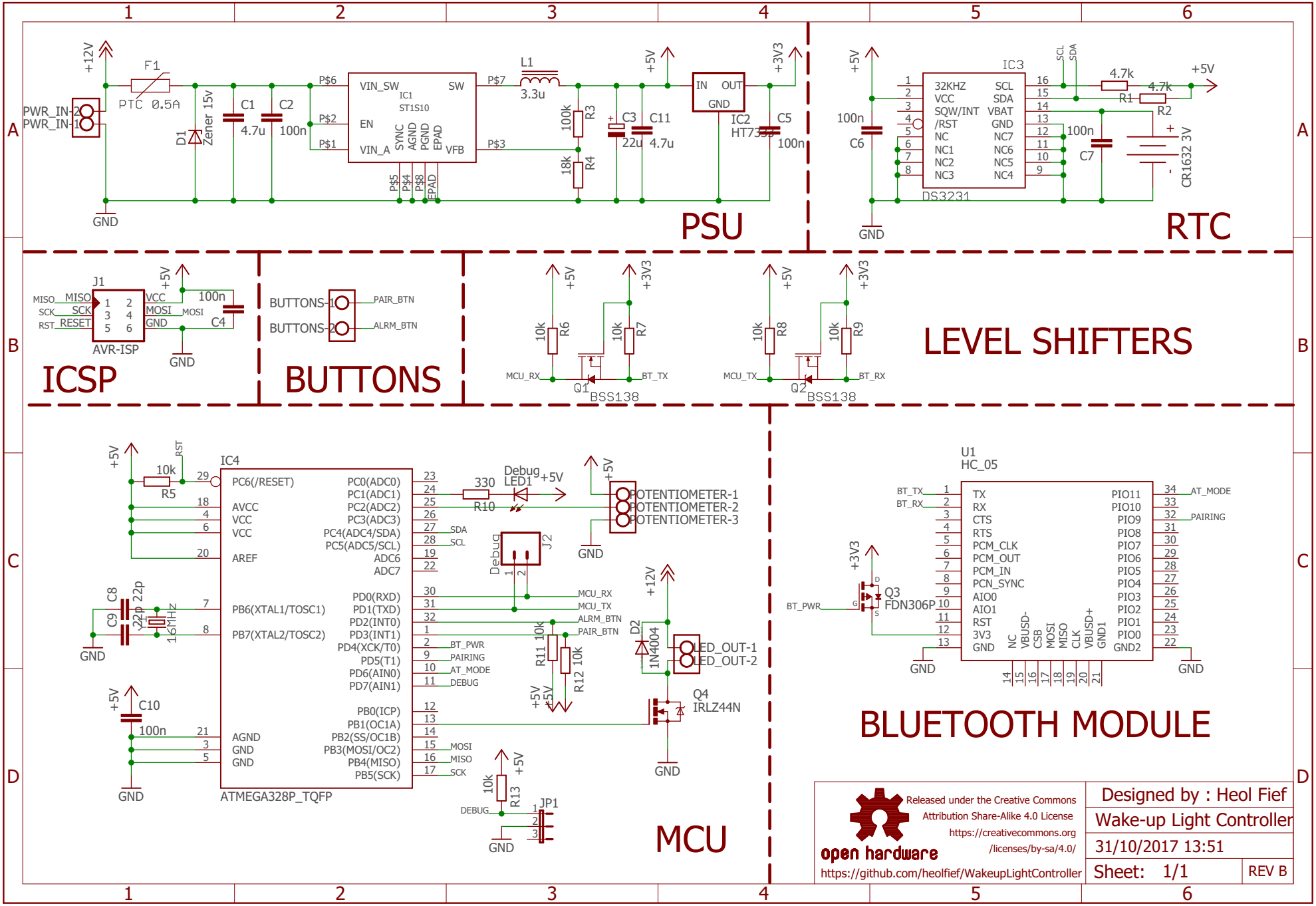

Released under the Creative Commons Attribution Share-Alike 4.0 License
https://creativecommons.org/licenses/by-sa/4.0/
open hardware
https://github.com/heolfief/WakeupLightController

Designed by : Heol Fief

Wake-up Light Controller

31/10/2017 13:51

Sheet: 1/1

REV B