Practical-4

Aim: Simulation of 4-Way Traffic Light with Arduino

Working Procedure

- Connect Red, Yellow, and Green LEDs for each direction (North, East, South, West) directly to Arduino pins using 220Ω resistors.
- Connect the anode (long leg) of each LED to Arduino pins and the cathode (short leg) to GND.
- Upload the Arduino code to the Arduino board.
- LEDs turn ON in sequence:
- Only one direction Green at a time, others Red.
- Green = 5 seconds, Yellow = 2 seconds, Red stays ON for others.
- Cycle repeats continuously simulating a 4-way traffic junction.
- Observe the LED sequence to understand traffic signal timing and control logic.

Components Required

- Arduino UNO
- 12 LEDs
  - 4 × Red (North, East, South, West)
  - 4 × Yellow (North, East, South, West)
  - 4 × Green (North, East, South, West)
- 12 Resistors (220Ω) – one for each LED to limit current
- Connecting Wires / Jumper Wires

Simulation Image

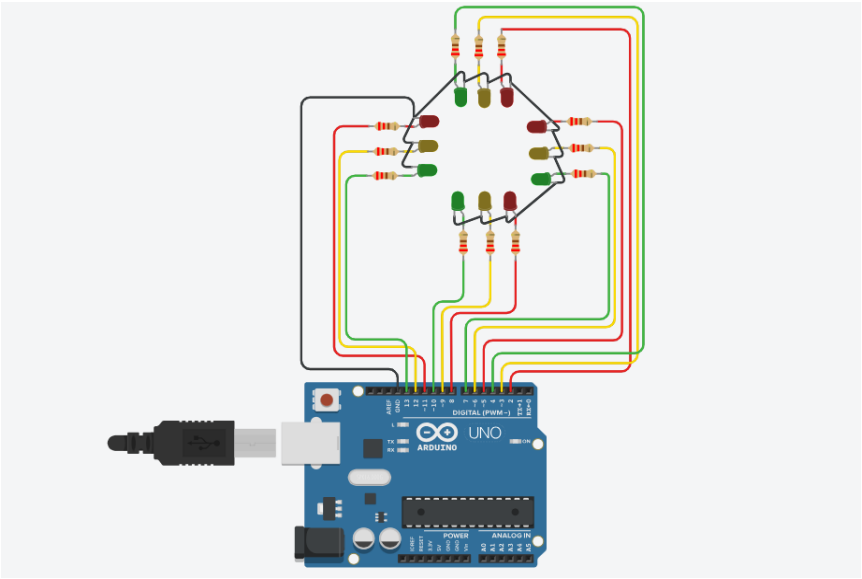

Arduino Code: 4-Way Traffic Light

```
int NRed = 2, NYellow = 3, NGreen = 4;
int ERed = 5, EYellow = 6, EGreen = 7;
int SRed = 8, SYellow = 9, SGreen = 10;
int WRed = 11, WYellow = 12, WGreen = 13;

void setup() {
  pinMode(NRed, OUTPUT); pinMode(NYellow, OUTPUT); pinMode(NGreen, OUTPUT);
  pinMode(ERed, OUTPUT); pinMode(EYellow, OUTPUT); pinMode(EGreen, OUTPUT);
  pinMode(SRed, OUTPUT); pinMode(SYellow, OUTPUT); pinMode(SGreen, OUTPUT);
  pinMode(WRed, OUTPUT); pinMode(WYellow, OUTPUT); pinMode(WGreen, OUTPUT);
}
void allRed() {
  digitalWrite(NRed, HIGH); digitalWrite(NYellow, LOW); digitalWrite(NGreen, LOW);
  digitalWrite(ERed, HIGH); digitalWrite(EYellow, LOW); digitalWrite(EGreen, LOW);
  digitalWrite(SRed, HIGH); digitalWrite(SYellow, LOW); digitalWrite(SGreen, LOW);
  digitalWrite(WRed, HIGH); digitalWrite(WYellow, LOW); digitalWrite(WGreen, LOW);
}
void north() {
  allRed();
  digitalWrite(NRed, LOW);
  digitalWrite(NGreen, HIGH);
  delay(5000);
  digitalWrite(NGreen, LOW);
  digitalWrite(NYellow, HIGH);
  delay(2000);
  digitalWrite(NYellow, LOW);
}
void east() {
  allRed();
  digitalWrite(ERed, LOW);
  digitalWrite(EGreen, HIGH);
  delay(5000);
  digitalWrite(EGreen, LOW);
  digitalWrite(EYellow, HIGH);
  delay(2000);
  digitalWrite(EYellow, LOW);
}
```

```
void south() {
  allRed();
  digitalWrite(SRed, LOW);
  digitalWrite(SGreen, HIGH);
  delay(5000);
  digitalWrite(SGreen, LOW);
  digitalWrite(SYellow, HIGH);
  delay(2000);
  digitalWrite(SYellow, LOW);
}
void west() {
  allRed();
  digitalWrite(WRed, LOW);
  digitalWrite(WGreen, HIGH);
  delay(5000);
  digitalWrite(WGreen, LOW);
  digitalWrite(WYellow, HIGH);
  delay(2000);
  digitalWrite(WYellow, LOW);
}
void loop() {
  north();
  east();
  south();
  west();
}
```

What I Learned

- How traffic lights work and are sequenced.
- How to control multiple LEDs using Arduino pins.
- Using pinMode() and digitalWrite() to operate LEDs.
- Timing of Green, Yellow, and Red signals in real traffic.
- Hands-on experience in Arduino programming and basic automation.