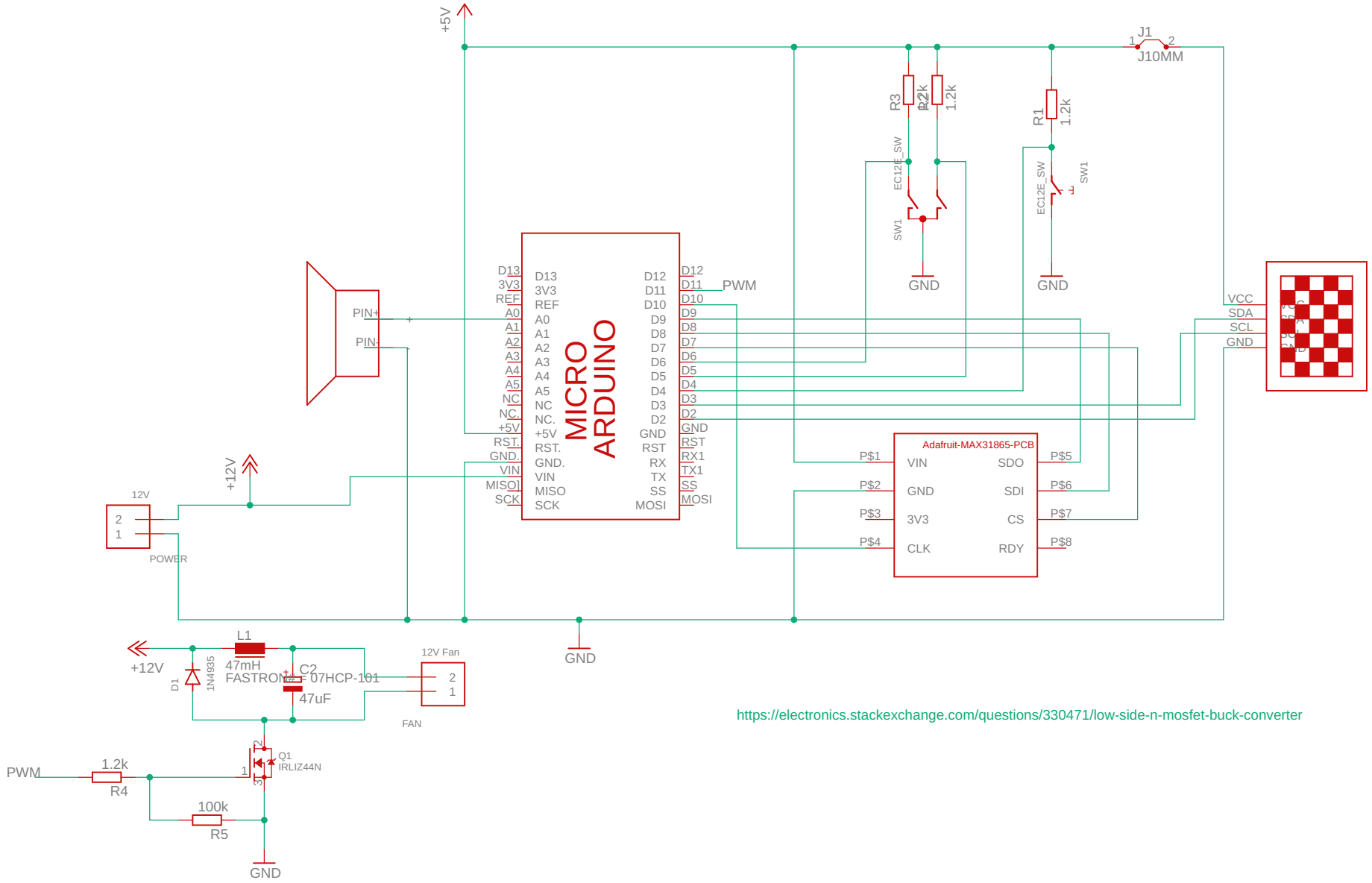


https://electronics.stackexchange.com/questions/330471/low-side-n-mosfet-buck-converter