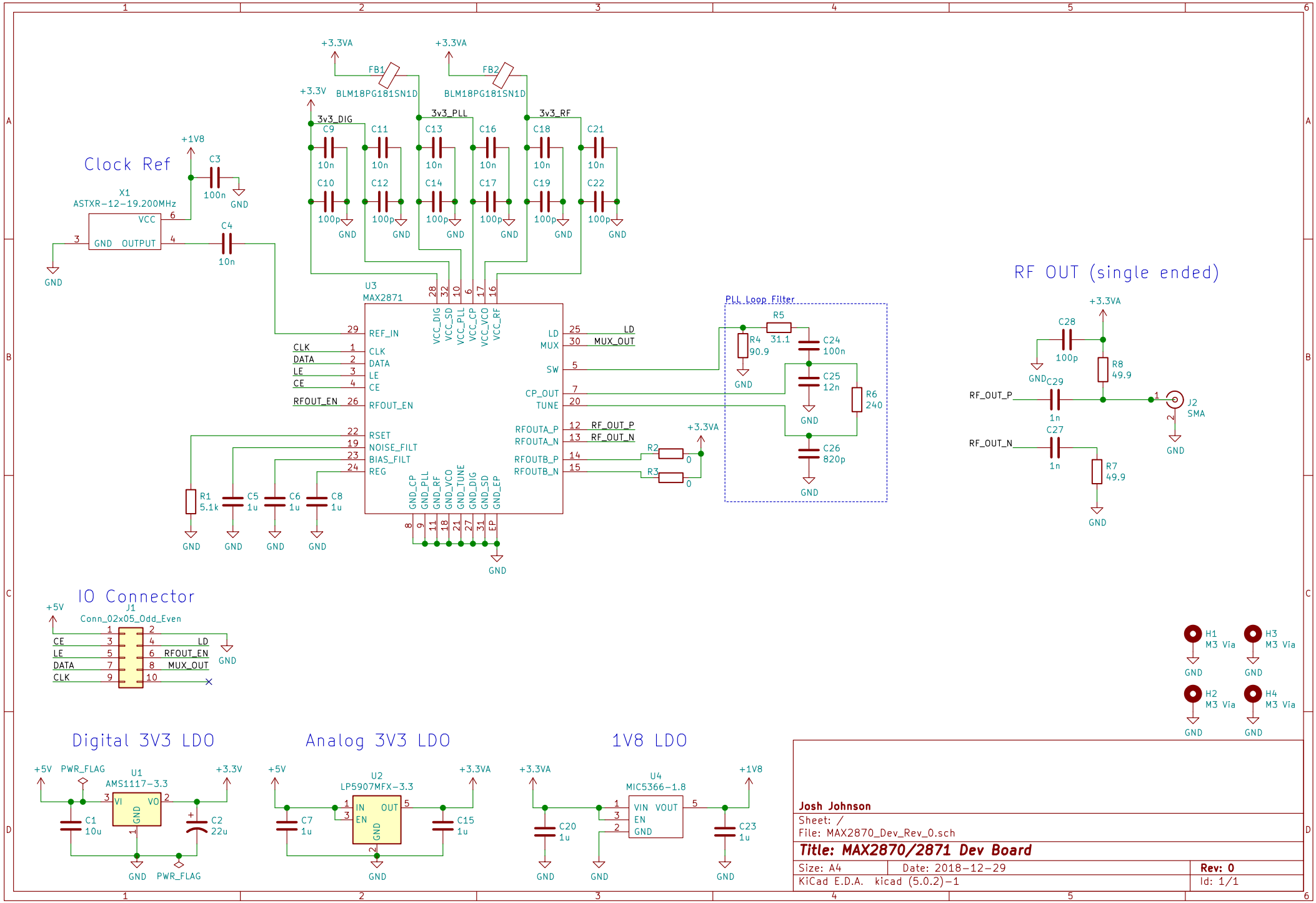
Clock Ref
X1
ASTXR-12-19.200MHz
VCC
GND
OUTPUT
+1V8
C3
100n
C4
10n
U3
MAX2871
REF_IN
CLK
DATA
LE
CE
RFOUT_EN
RSET
NOISE_FILT
BIAS_FILT
REG
LD
MUX
SW
CP_OUT
TUNE
RFOUTA_P
RFOUTA_N
RFOUTB_P
RFOUTB_N
MUX_OUT
RF_OUT_P
RF_OUT_N
VCC_DIG
VCC_SD
VCC_PLL
VCC_CP
VCC_VCO
VCC_RF
GND_CP
GND_PLL
GND_RF
GND_VCO
GND_TUNE
GND_DIG
GND_SD
GND_EP
EP
+3.3VA
+3.3V
FB1
FB2
BLM18PG181SN1D
3v3_DIG
3v3_PLL
3v3_RF
C9
C10
C11
C12
C13
C14
C16
C17
C18
C19
C21
C22
10n
100p
R1
5.1k
C5
1u
C6
1u
C8
1u
R2
R3
0
PLL Loop Filter
R5
31.1
R4
90.9
C24
100n
C25
12n
R6
240
C26
820p
RF OUT (single ended)
C28
100p
R8
49.9
C29
1n
C27
1n
R7
49.9
J2
SMA
IO Connector
J1
Conn_02x05_Odd_Even
+5V
CE
LE
DATA
CLK
LD
RFOUT_EN
MUX_OUT
H1
H2
H3
H4
M3 Via
Digital 3V3 LDO
U1
AMS1117-3.3
PWR_FLAG
C1
10u
C2
22u
Analog 3V3 LDO
U2
LP5907MFX-3.3
IN
OUT
EN
C7
1u
C15
1u
1V8 LDO
U4
MIC5366-1.8
VIN
VOUT
C20
1u
C23
1u
Josh Johnson
Sheet: /
File: MAX2870_Dev_Rev_0.sch
Title: MAX2870/2871 Dev Board
Size: A4
Date: 2018-12-29
Rev: 0
KiCad E.D.A. kicad (5.0.2)-1
Id: 1/1