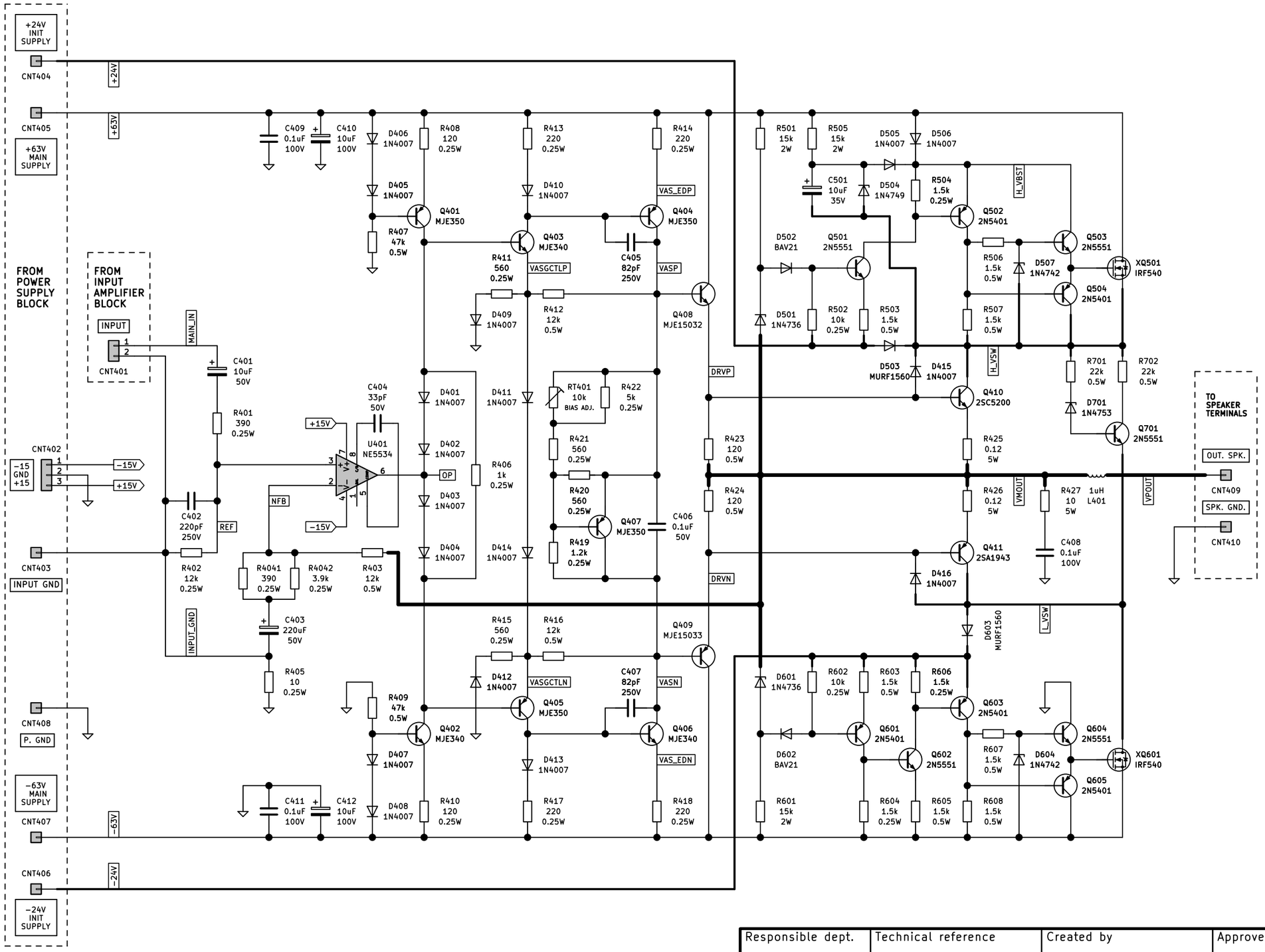

BSD LOW POWER SERIES DEVELOPMENT STEP 1

Responsible dept.	Technical reference	Created by	Approved by	
BSD POWER AMP		Document type	Document status	
		Title, Supplementary title 290 WATTS RMS CLASS-H AUDIO POWER AMPLIFIER FOR 4-OHMS LOUDSPEAKER	Rev. / Date of issue 2022-10-21 / Lang. / Sheet 2/2	

A3