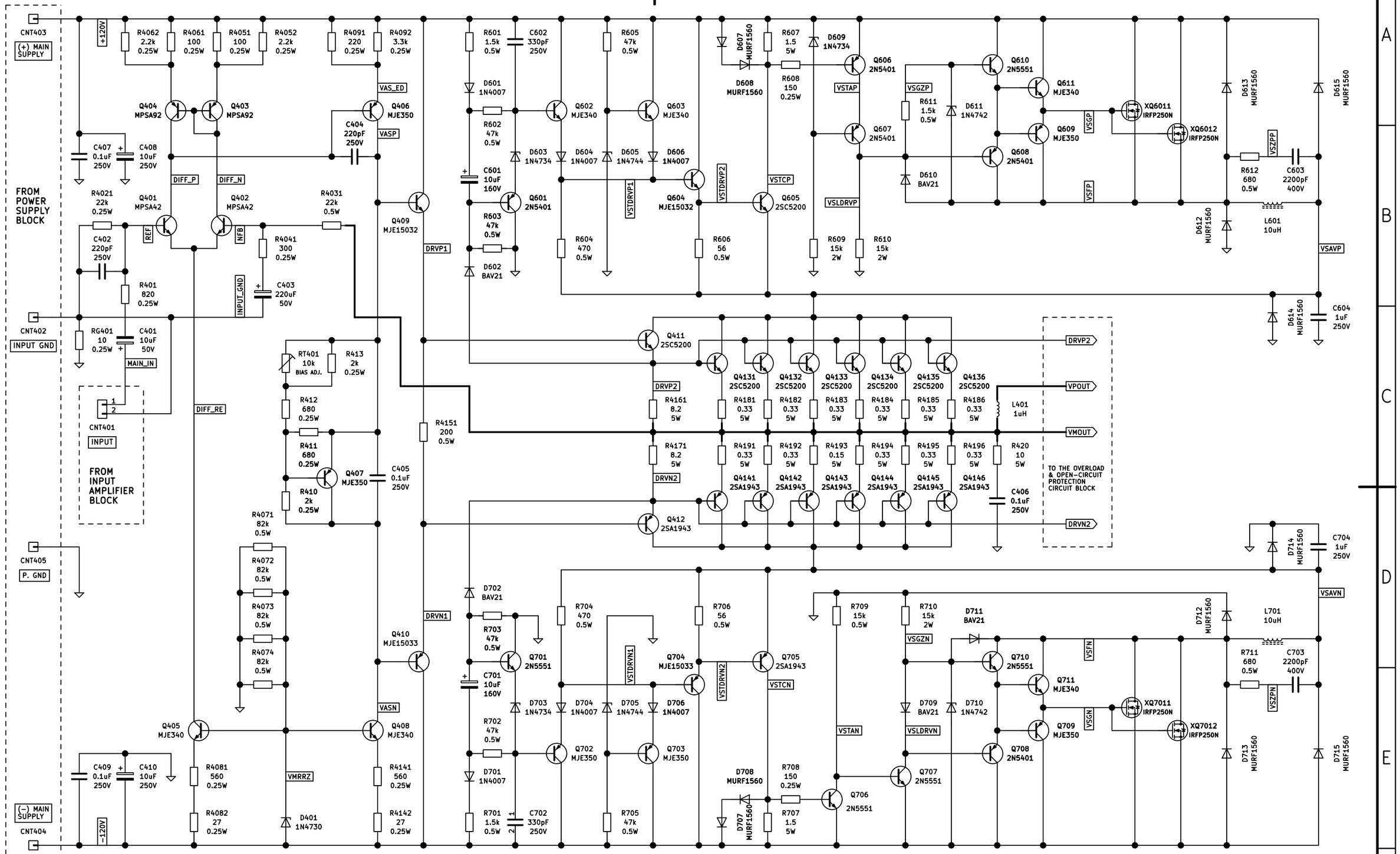

Responsible dept.	Technical reference	Created by	Approved by
BSD POWER AMP		Document type	Document status
		Title, Supplementary title 1300 WATTS RMS CLASS-TD AUDIO POWER AMPLIFIER FOR 4-OHMS LOUDSPEAKER	

Rev.	Date of issue	Lang.	Sheet
	2022-09-24		2/3

A3