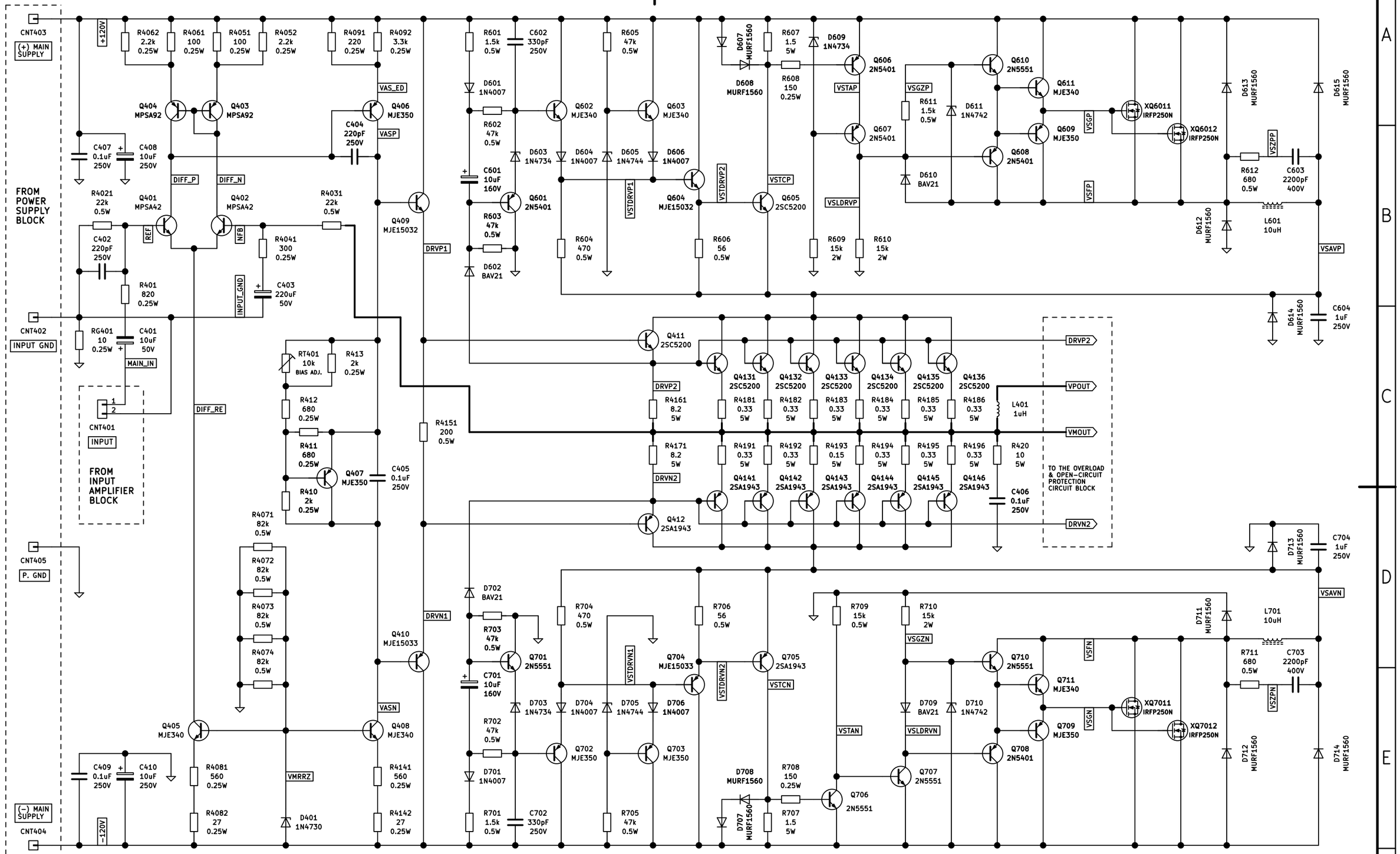

Responsible dept.	Technical reference	Created by	Approved by
BSD POWER AMP		Document type	Document status
		Title, Supplementary title 1300 WATTS RMS CLASS-TD AUDIO POWER AMPLIFIER FOR 4-OHMS LOUDSPEAKER	
		Rev. / Date of issue 2022-09-12 / Lang. / Sheet 2/3	

A3