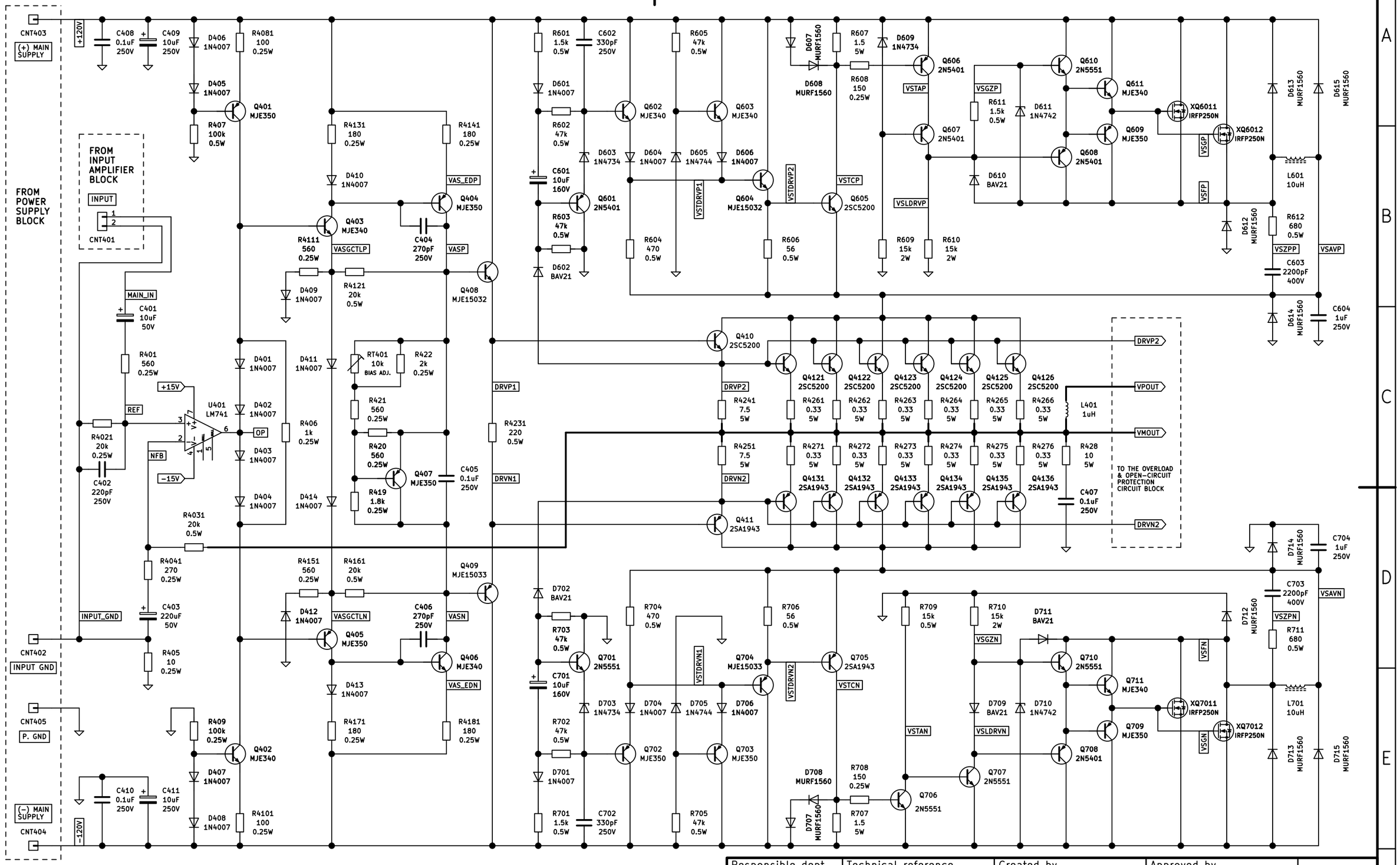

BSD-1K3L4-DEV5

Responsible dept.	Technical reference	Created by	Approved by	
BSD POWER AMP		Document type	Document status	
		Title, Supplementary title 1300 WATTS RMS CLASS-TD AUDIO POWER AMPLIFIER FOR 4-OHMS LOUDSPEAKER	Rev. / Date of issue: 2022-10-11 / Lang. / Sheet: 2/3	

A3