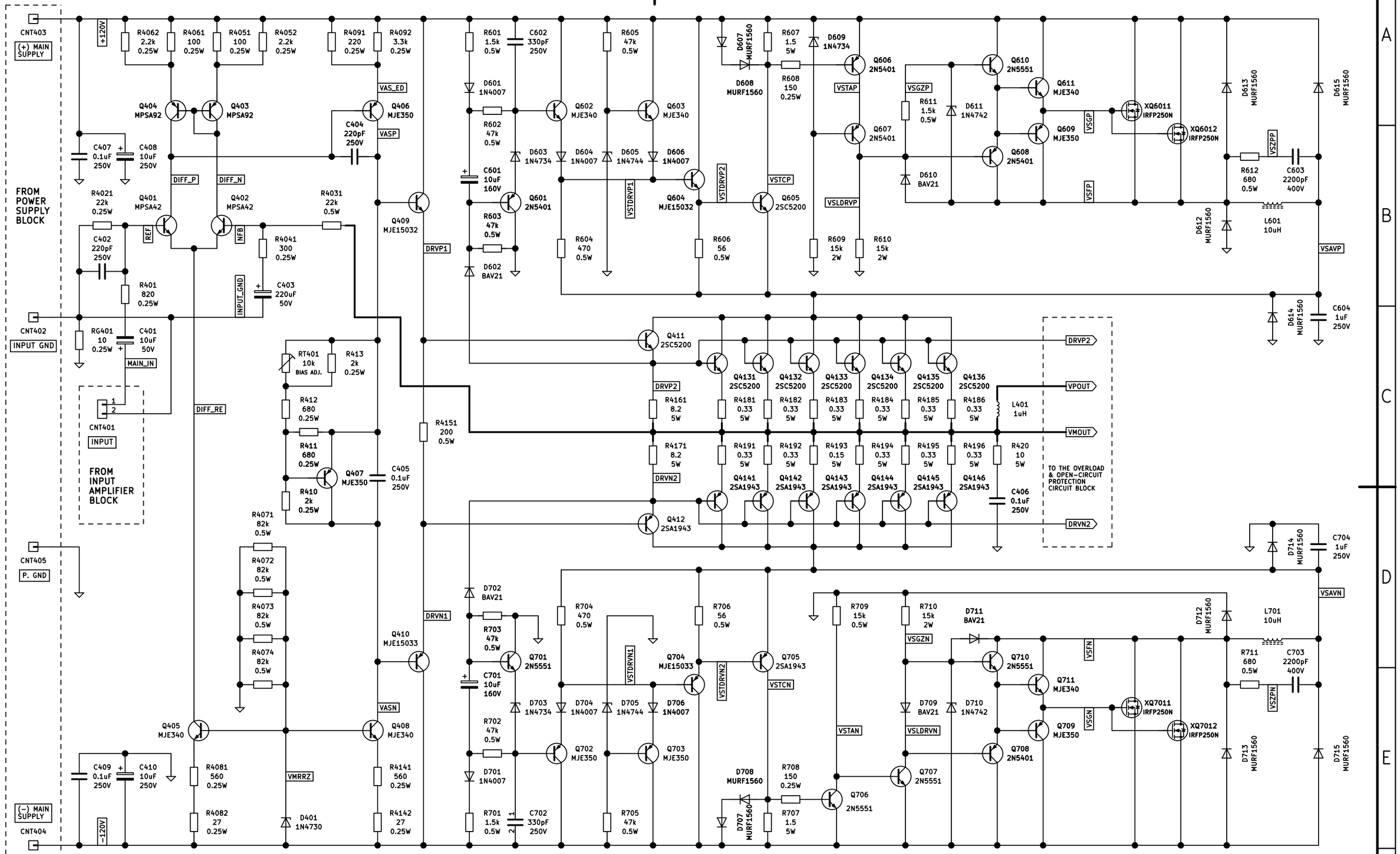

Responsible dept.	Technical reference	Created by	Approved by	
BSD POWER AMP		Document type	Document status	
		Title, Supplementary title 1300 WATTS RMS CLASS-TD AUDIO POWER AMPLIFIER FOR 4-OHMS LOUDSPEAKER		
			Rev.	Date of issue: 2022-09-25 · Lang. · Sheet 2/3

A3