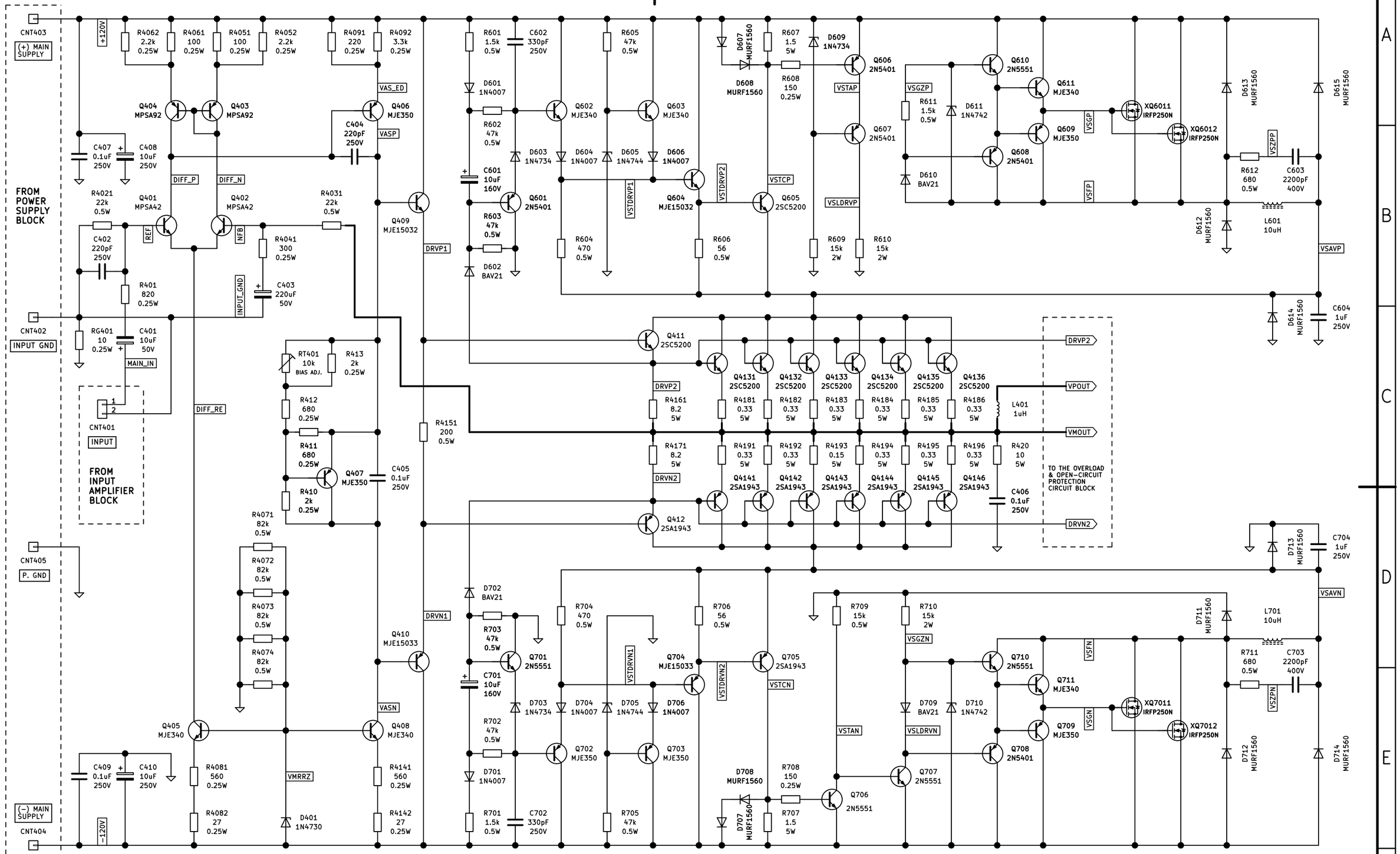

Responsible dept.	Technical reference	Created by	Approved by	
		Document type	Document status	
		Title, Supplementary title 1300 WATTS RMS CLASS-TD AUDIO POWER AMPLIFIER FOR 4-OHMS LOUDSPEAKER		
		Rev.	Date of issue 2022-09-11	Lang. / Sheet 2/3

A3