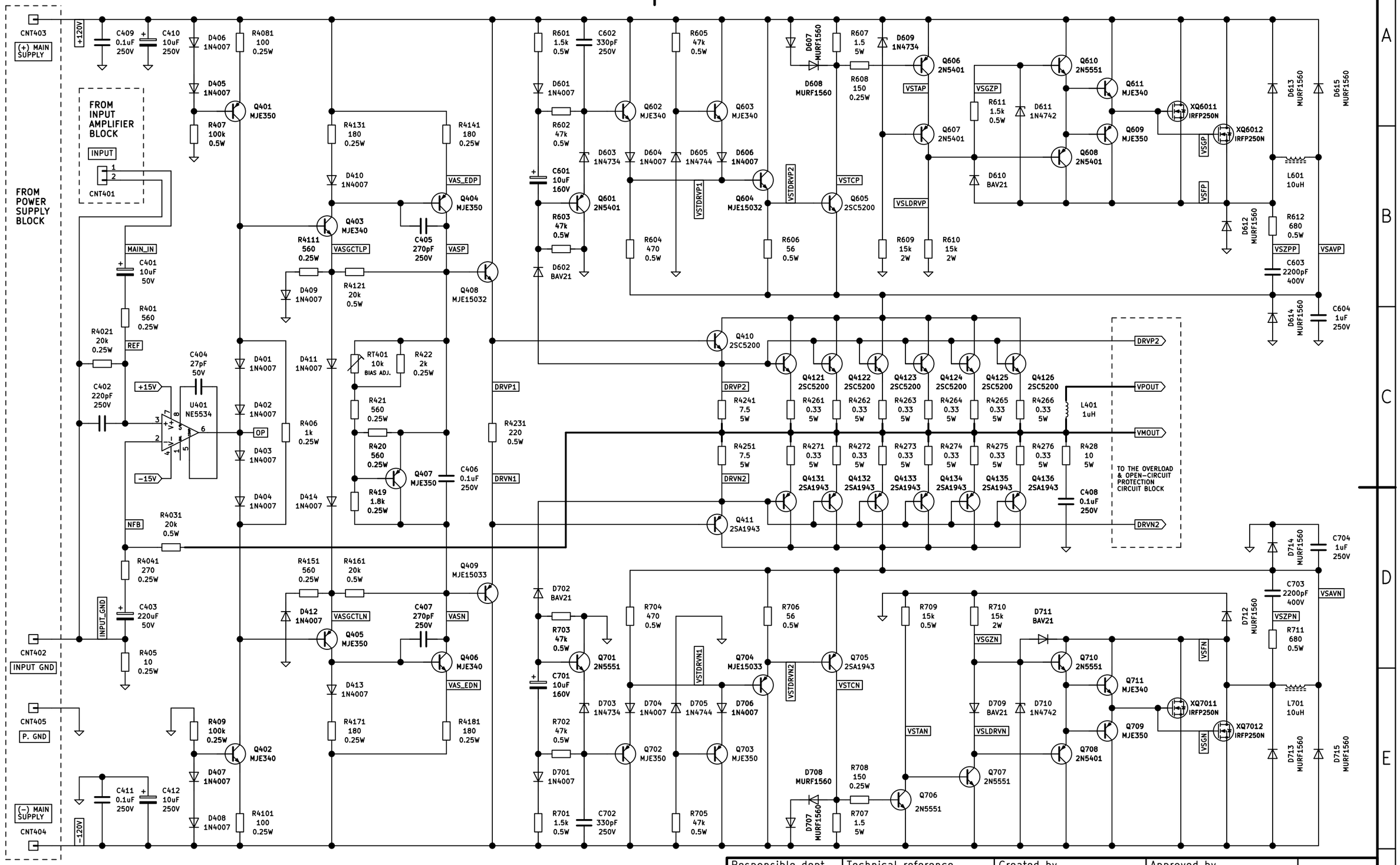

BSD-1K3L4-DEV6

Responsible dept.	Technical reference	Created by	Approved by	
BSD POWER AMP		Document type	Document status	
		Title, Supplementary title 1300 WATTS RMS CLASS-TD AUDIO POWER AMPLIFIER FOR 4-OHMS LOUDSPEAKER		
		Rev.	Date of issue 2022-10-12	Lang. / Sheet 2/3

A3