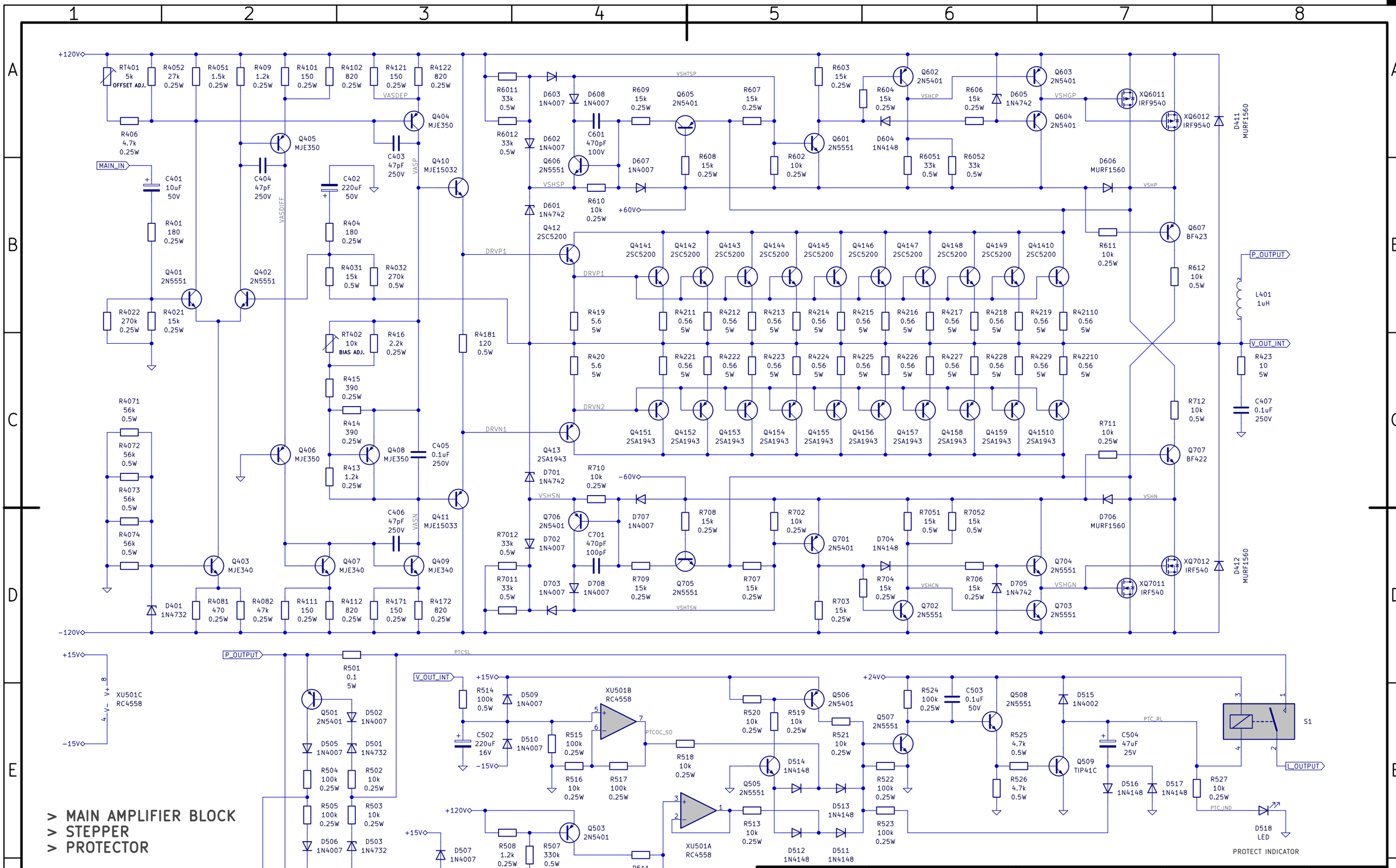

> MAIN AMPLIFIER BLOCK
> STEPPER
> PROTECTOR

Responsible dept.	Technical reference	Created by	Approved by	
MATRIX 1.4 IV T13		Document type	Document status	
		Title, Supplementary title 1400 WATTS RMS CLASS H AUDIO POWER AMPLIFIER FOR 4-OHMS LOUDSPEAKER		
			Rev. / Date of issue 2022-06-13 / Lang. / Sheet 2/2	

A3