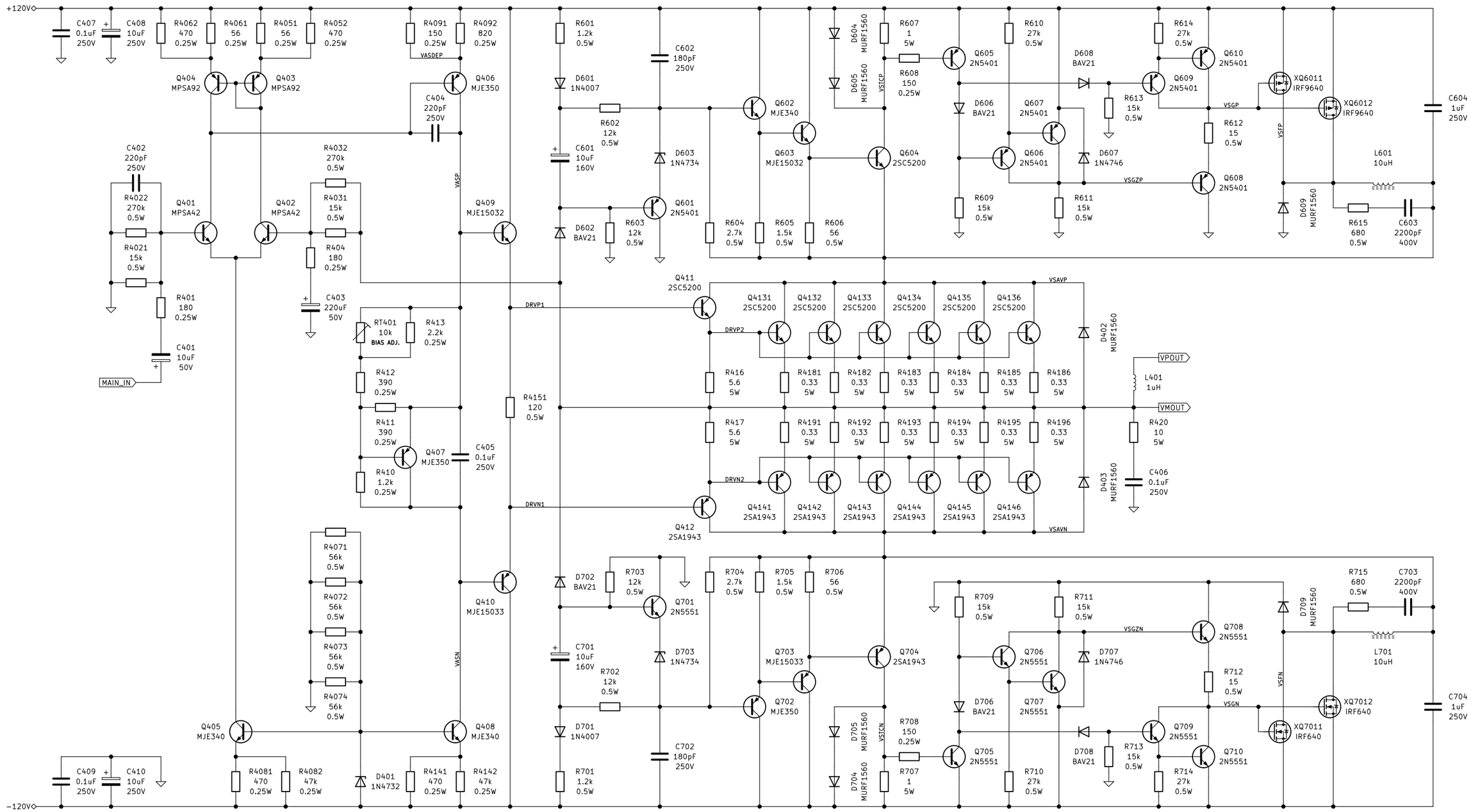

Responsible dept.	Technical reference	Created by	Approved by	
MATRIX 1.4 IV T13		Document type	Document status	
		Title, Supplementary title 1400 WATTS RMS CLASS-TD AUDIO POWER AMPLIFIER FOR 4-OHMS LOUDSPEAKER		
		Rev.	Date of issue: 2022-07-24	Lang. / Sheet: 2/2

A3