REVISIONS			
REV	DESCRIPTION	DATE	APPROVED
A	RELEASE/CHANGE PER ECO-R221710	SEE AGILE	SEE AGILE

ALL GRAPHICS FOR ILLUSTRATION PURPOSES ONLY
REFER TO ARTWORK P/NO. 10100904 [6]

SOLIDWORKS DRAWING: ALL CHANGES MUST BE DONE IN SOLIDWORKS DATABASE.

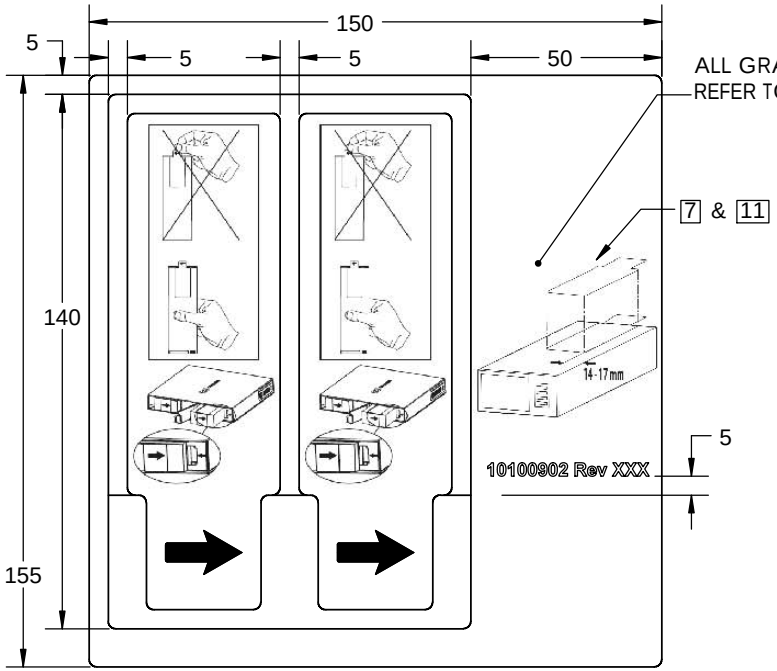

10100902 ASSEMBLY

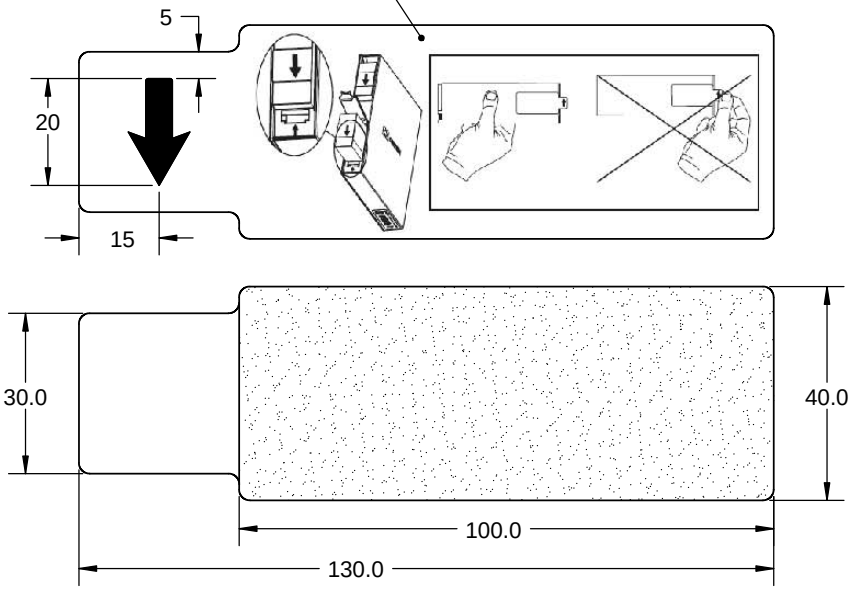

EXTRACTION TAB (TAB ONLY)

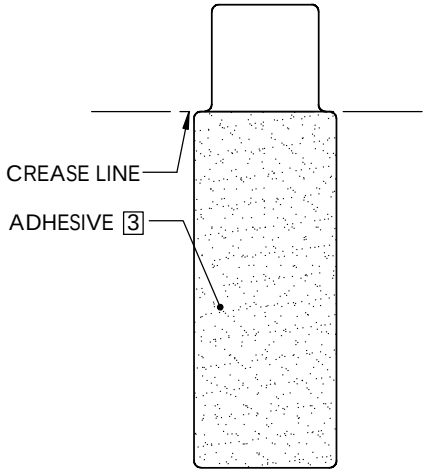

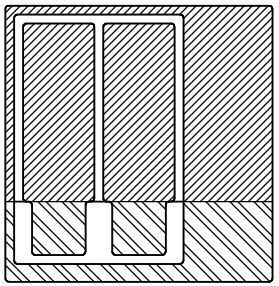

ADHESIVE BACKING BOUNDARY

POLYESTER MATERIAL WITH ADHESIVE BACKING

POLYESTER MATERIAL WITHOUT ADHESIVE BACKING

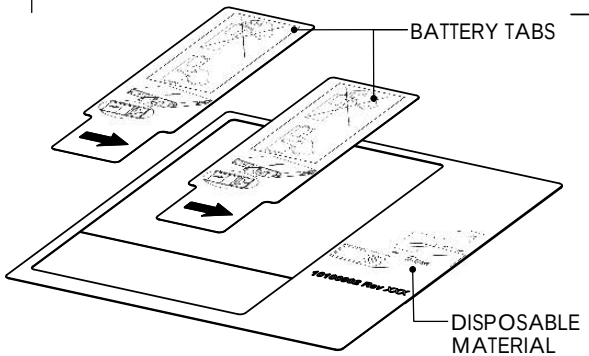

10100902 (EXPLODED VIEW)

NOTES: UNLESS OTHERWISE SPECIFIED.

1. APPLICABLE STANDARDS/SPECIFICATIONS:
   ASME Y14.3-2007, MULTIVIEW AND SECTIONAL VIEW DRAWINGS.
   ASME Y14.4M-2009, PICTORIAL DRAWINGS.
   ASME Y14.5M-2009, DIMENSIONS AND TOLERANCES.
   ASME Y14.38A.-2007, ABBREVIATIONS AND ACRONYMS.
2. ALL DIMENSIONS ARE IN MILLIMETRES.
3. PART/COMPONENTS TO BE RoHS COMPLIANT. [4]

[4]. CERTIFICATE OF CONFORMANCE REQUIRED

[5]. MATERIAL:
   - PLASTIC BACKING: 150MIC POLYESTER, CLEAR. [4]
   - ADHESIVE: D/S LSE (ONE SIDE ONLY). [4]
   - INK: TEXT AND PATTERNS: BLACK, RAL 9005, ALCOHOL RESISTANT, [4]
     BACKGROUND: WHITE, RAL 9003, ALCOHOL RESISTANT. [4]

6. ARTWORK: P/NO. 10100904 (REV A).
   ARTWORK ON THIS DRAWING IS FOR REFERENCE ONLY.
   ILLUSTRATIONS TO BE POSITIONED WHERE APPROXIMATELY SHOWN.

[7]. DRAWING NUMBER AND REVISION TO BE DETAILED ON LABEL FLASH FOR TRACEABILITY.

8. ALL RADII ARE 2.0mm
9. PACKAGING: THE OVERLAY MUST BE PROTECTED FROM DAMAGE AND SUBSEQUENT HANDLING / STORAGE AT COVIDIEN. IF PROTECTIVE FILM IS USED IT MUST BE READILY REMOVABLE AT COVIDIEN. THE PROTECTIVE FILM AND REMOVAL OF THE FILM SHOULD NOT DAMAGE THE OVERLAY.
10. PACKAGING TO LABELLED WITH COVIDIEN PART NUMBER AND REVISION.

[11]. REPLACE "XXX" WITH CURRENT ASSEMBLY REVISION. TEXT: SIZE 14 AERIAL BOLD. TEXT TO BE HORIZONTALLY CENTERED BETWEEN EDGE OF MATERIAL AND ADJACENT TAB.

GENERAL DIMENSIONAL TOLERANCES			
DEC.	DEC.	DEC.	DEC.
X. +/-	.x +/-	.xx +/-	.xxx +/-
1	.5	-	-
DEC.	HOLES	FRAC.	ANG.
.xxxx +/-	+/-	+/-	+/-
-	-	-	-

SCALE: SCALE

DO NOT SCALE DRAWING

THIRD ANGLE PROJECTION

PROPRIETARY & CONFIDENTIAL. THIS DOCUMENT MAY NOT BE COPIED, DISCLOSED, OR USED IN WHOLE OR IN PART WITHOUT THE CONSENT OF COVIDIEN.

TITLE:

TAB, EXTRACTION, PB500 SERIES BATTERY

COVIDIEN
6135 Gunbarrel Avenue
Boulder, CO 80301

© 2012 COVIDIEN ALL RIGHTS RESERVED.

DRAWN:	J. BURKE	DATE:	14 Nov 2012
CHECKED:	SEE AGILE	DATE:	SEE AGILE
APPROVED:	SEE AGILE	DATE:	SEE AGILE

SIZE: A3 | FILENAME: 10100902.SLDDRW

DRAWING NO.: 10100902 | REV: A

SHEET: 1 OF 1