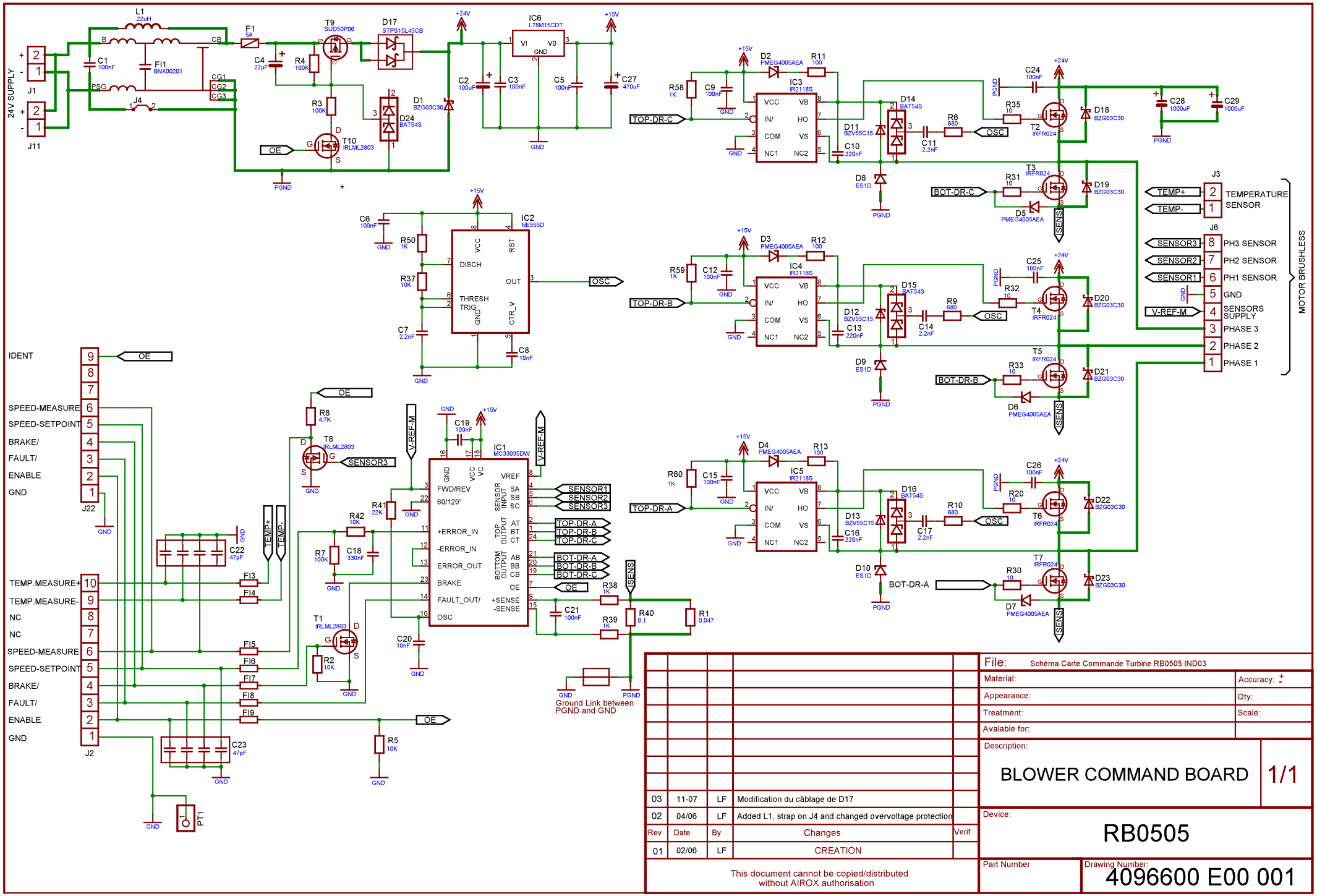

Rev	Date	By	Changes	Verif
03	11-07	LF	Modification du câblage de D17	
02	04/06	LF	Added L1, strap on J4 and changed overvoltage protection	
01	02/06	LF	CREATION	

This document cannot be copied/distributed without AIROX authorisation

File: Schéma Carte Commande Turbine RB0505 IND03

Material:

Accuracy: ±

Appearance:

Qty:

Treatment:

Scale:

Avalable for:

Description:

BLOWER COMMAND BOARD

1/1

Device:

RB0505

Part Number

Drawing Number:

4096600 E00 001