ØLTRONIX

OWNER'S MANUAL

REGULATED POWER SUPPLY

LABPAC B602 D B603 D

Serial No .....

ØLTRONIX

LABPAC B602D B603D

UIL-1(4)
1977-03-28

USERS INSTRUCTIONAL LEAFLET

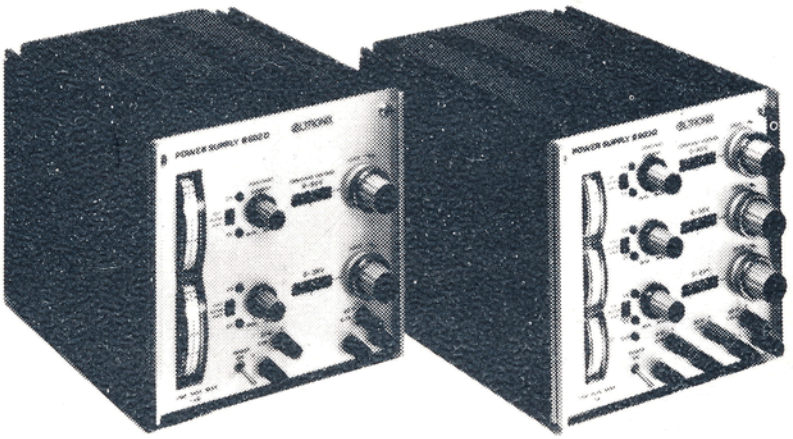

RATING DATA [1]

		B602D	B603D
Source voltage	U_S	220V±10%, 240V±10% [2], 48-63Hz	
Output voltage/current			
output 1	U_{ex}/I_{ex}	0-60V/0,7A	0-60V/0,65A
-"- 2		0-30V/1,4A	0-30V/1A
-"- 3		—	0-6V/3A
Ambient temperature, operating	t_{amb}	0-40°C	

PERFORMANCE RATINGS [1] (Data subject to Change)

Source current, max	I_{Sm}	$0{,}85A_{rms}$
Load effect, all outputs (load regulation) I_{ex}=0-100%	U_{erL}	<15mV
Source effect, all outputs (line regulation) $U_{Snom}=U_S\pm10\%$	U_{erS}	<1mV or 0,01%
Temperature coefficient t_{amb}=0-40°C	α	$<0{,}01\%\,°C^{-1}$
PARD (ripple and noise) f_B=20Hz-20MHz	U_{PARD}	$<1{,}5mV_{p-p}$

		B602D	B603D
Drift (stability) τ=8h, f_B=0-20Hz	U_{erD}	<0,05%	
Load transient recovery time I_{ex}=0-100% Trans. rec.band=±50mV	τ_R	<50µs	
Setting range, output 1	U/I	0-70V/0,04-0,74A	0-70V/0,03-0,68A
-"- -"- -"- 2		0-36V/0,07-1,47A	0-36V/0,05-1,05A
-"- -"- -"- 3		—	0-7V/0,15-3,15A
Control ranges	-	See Output Chart	
Control deviation, max of rated voltage	Δ_m	±0,3%	
Crossover area, max	$(U/I)_{const}$	100mV/50mA	
Reverse current protection, max	I_{Rm}	1A	3A on output 3
Reverse voltage protection, max	U_{Rm}	1V (One diode voltage forward drop)	
Isolation voltage, max on output terminals relative to the chassis	U_{isol}	±500V	
Insulating resistance, min U_{test}=500V	R_{insul}	>100Mohm	
Transformer OTP, automatic	t_{OTP}	110°C	
Storage temperature	t_{stor}	-40°C to 85°C	
Overall dimensions	height	176mm	
	width	176mm	
	depth	255mm	
Mass	m	5,0kg	5,3kg
Mains fuse	F_{10}	1,6A slowblow at the rear	
Mains cable (see Mains, page 3)	-	Fixed, 1,8m with 10-16A/250V, earthed EUR-connector.	

[1]) Rating Data and Performance Ratings are expressed in accordance with international recommendations, notably IEC-478.

[2]) Connected for U_{Snom}=240V on order or changed at Service Center.

To make the best use of your new LABPAC, follow these instructions!
(Applicable to both models, unless otherwise indicated).

MAINS

The unit has a fixed mains cable with earthed 10-16A/250V EUR-connector, fitted at the rear. Adjacent is the mains fuse. The unit is thermally protected by an automatic cut-out in the mains transformer.

As an option, mains filter may be provided with a single detachable mains cable using CEE22/4 (6A)-connector.

For 220/240V mains tap-changing, see Service Instruction LPB602/3D-1.

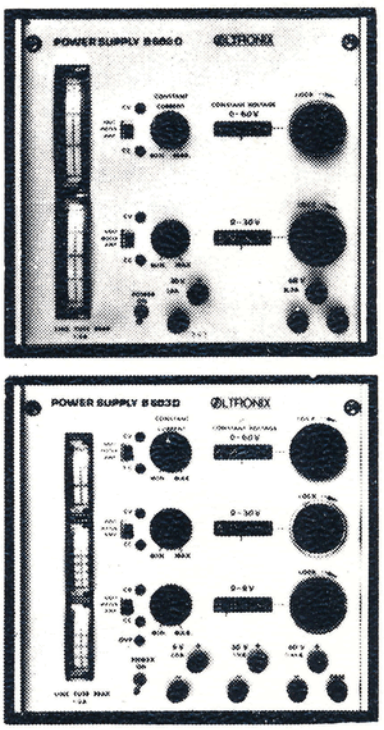

Figure 1

VOLTAGE ADJUSTMENT (Figure 1)

The output level is set by means of the "CONSTANT VOLTAGE" potentiometer. The set value is displayed in the adjacent window to within ±0.3% of the rated output voltage.
A mechanical brake "LOCK" provides for a secure setting against unintentional turning.

CURRENT ADJUSTMENT (Figure 1)

The max output current is controlled by the "CONSTANT CURRENT" potentiometer. It can be set to any current between the max rated and down to 5% thereof.

CONSTANT VOLTAGE / CONSTANT CURRENT (Figure 2)

The cross-over area of the CV/CC is determined by the setting of the two parameters and is less than 100mV for a 50 mA change.

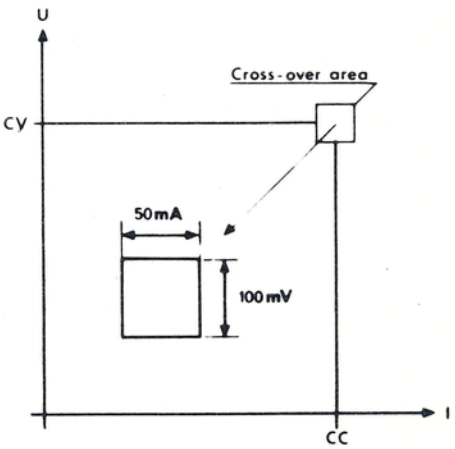

Figure 2

MONITORING (Figure 1)

The operating mode for each output is indicated by two light emitting diodes "CV" and "CC". The output voltage or current are indicated on the meter as selected by the "VOLT-AMP" switch.

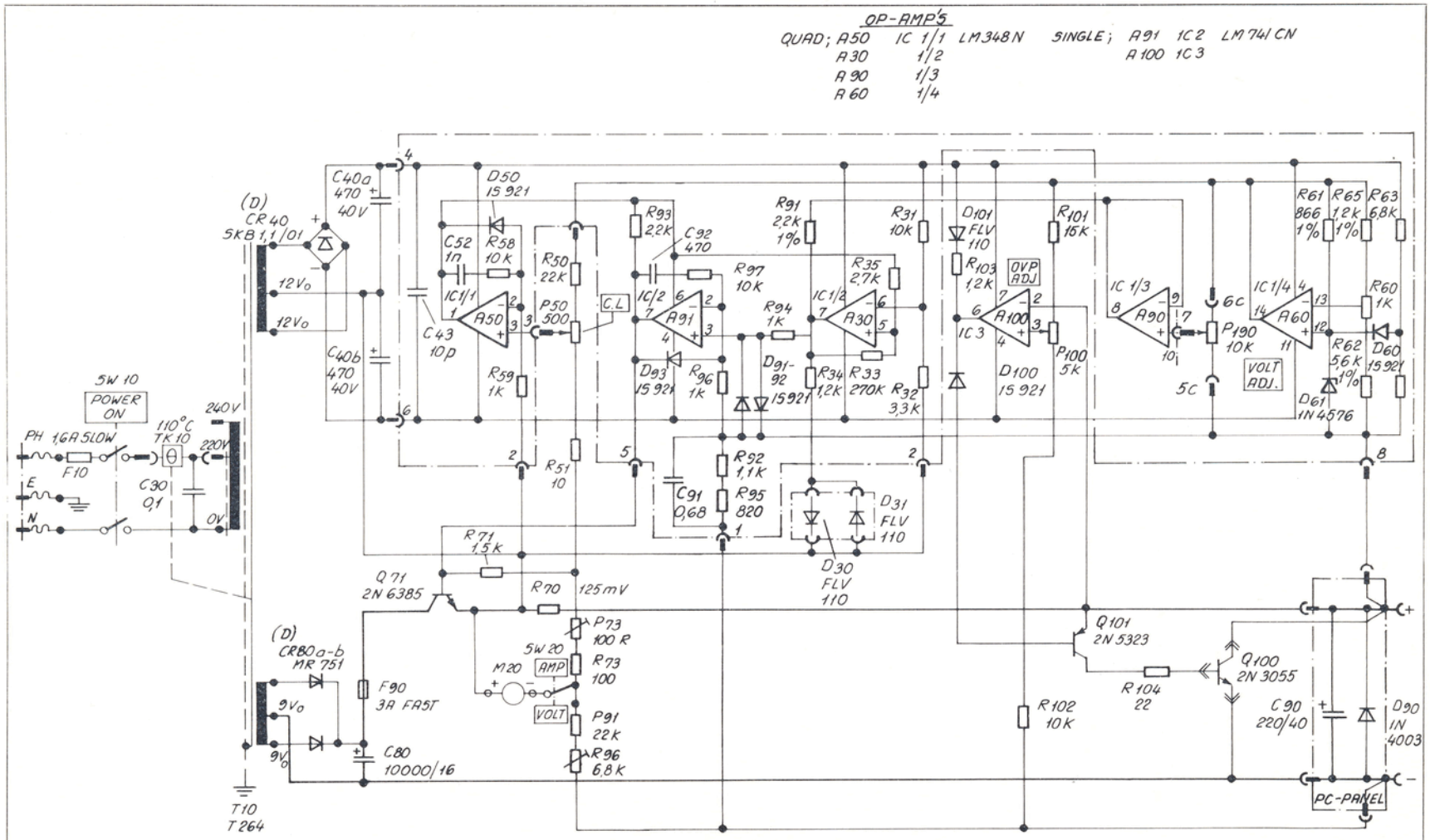

NB. ALL RESISTOR VALUES IN OHMS, UNLESS OTHERWISE SPEC.
ALL CAPACITOR -"- µF -"- -"- -"-

PART NO PCB Reg: M10 5700	SCALE	ØLTRONIX	NAME 0-6V 3A VERSION B
MTRL NO			FAMILY LABPAC MODEL B603D
SURF. TREAT.		X AB / AG / BV / GmbH	DRWG NO 260 – 73 – 1/1
DRAWN DATE 77.05.09 SIGN DA/BB	FREEZE DATE SIGN		

No	REVISION	DATE	APPD

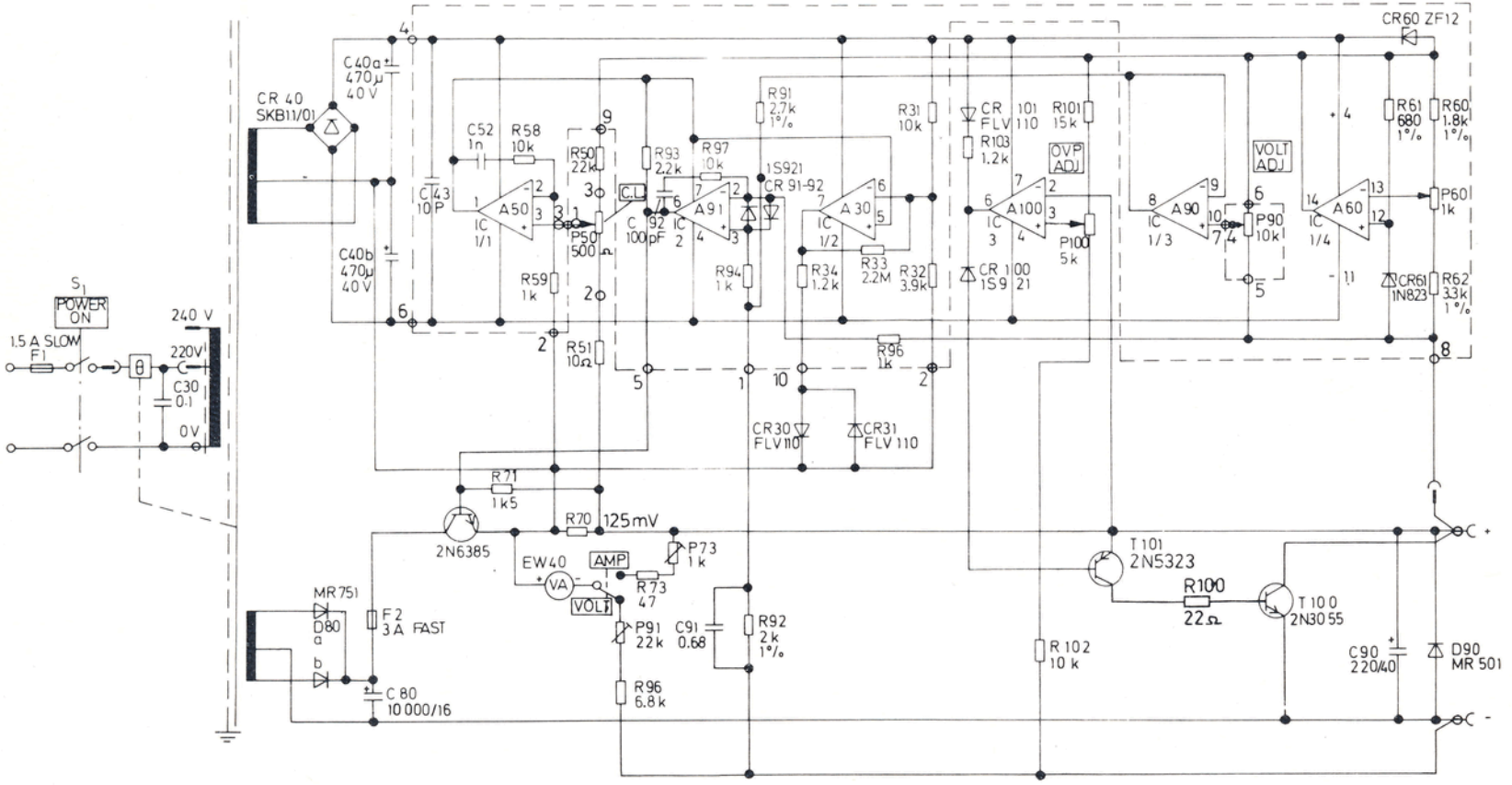

MODEL	MATERIAL	FINISH

MODEL LABPAC 603 D	MATERIAL	FINISH	
OLTRONIX	LABPAC B 603 D 0-6 V 3 A VERSION A	PART NO.	SCALE
		DR 1976-02-16 BF	APPD
	PCB Reg: M10 4918	260 – 73 – 1	REV

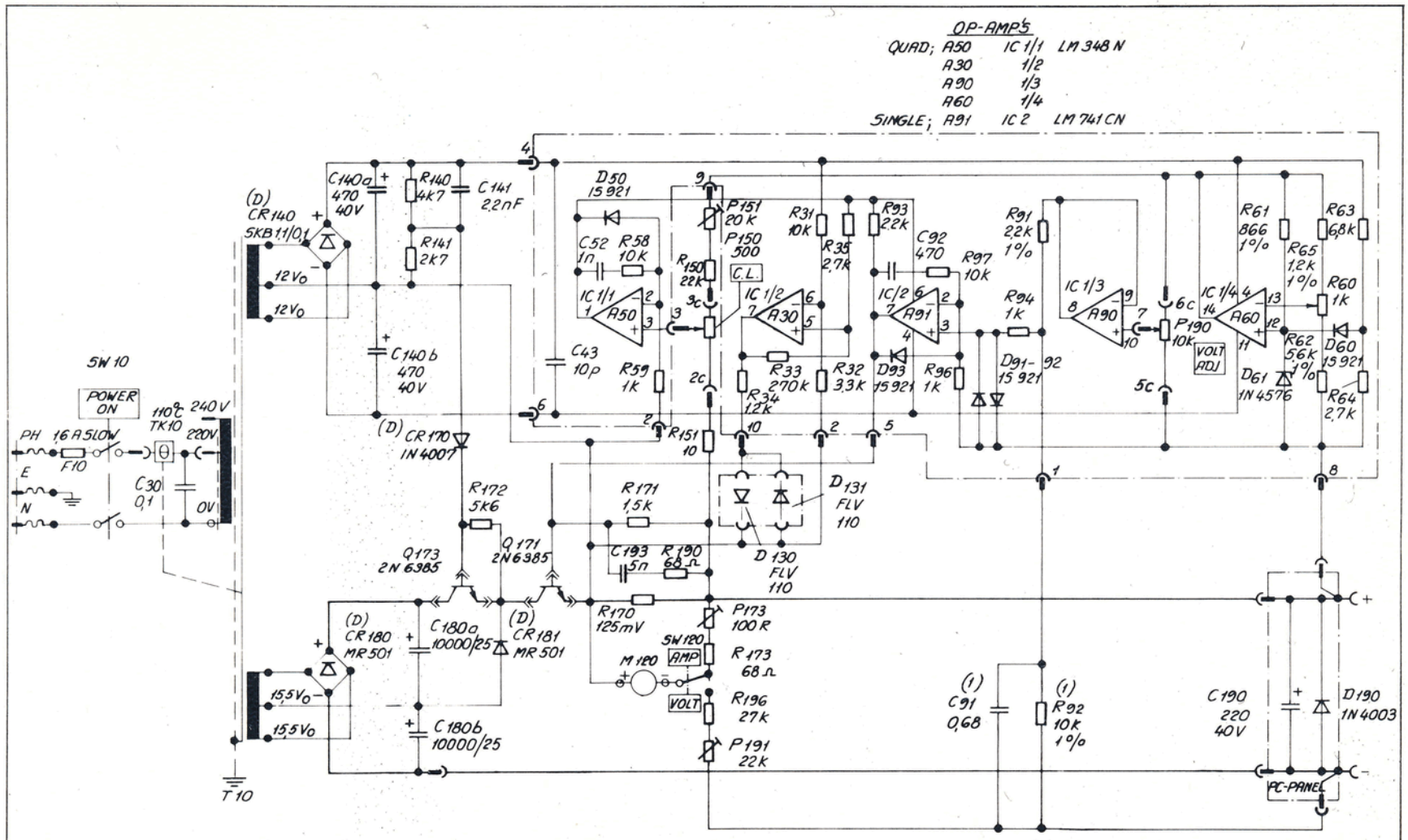

N.B. ALL RESISTOR VALUES IN OHMS, UNLESS OTHERWISE SPEC.
ALL CAPACITOR -"- µF -"- -"- -"-

VERSION B

(1) ON PC REG. BOARD IN B603D

PART NO PCB Reg: M105700	SCALE	OLTRONIX	NAME 0-30V 1,4 A B602D 0-30V 1,0A B603D
MTRL NO			
SURF. TREAT		X AB ☐ AG ☐ BV ☐ GmbH	FAMILY LABPAC MODEL 602-603
DRAWN DATE SIGN 77.04.21 Sc/BB	FREEZE DATE SIGN		DRWG NO 260 – 73 – 2/1

No.	REVISION	DATE	APPD

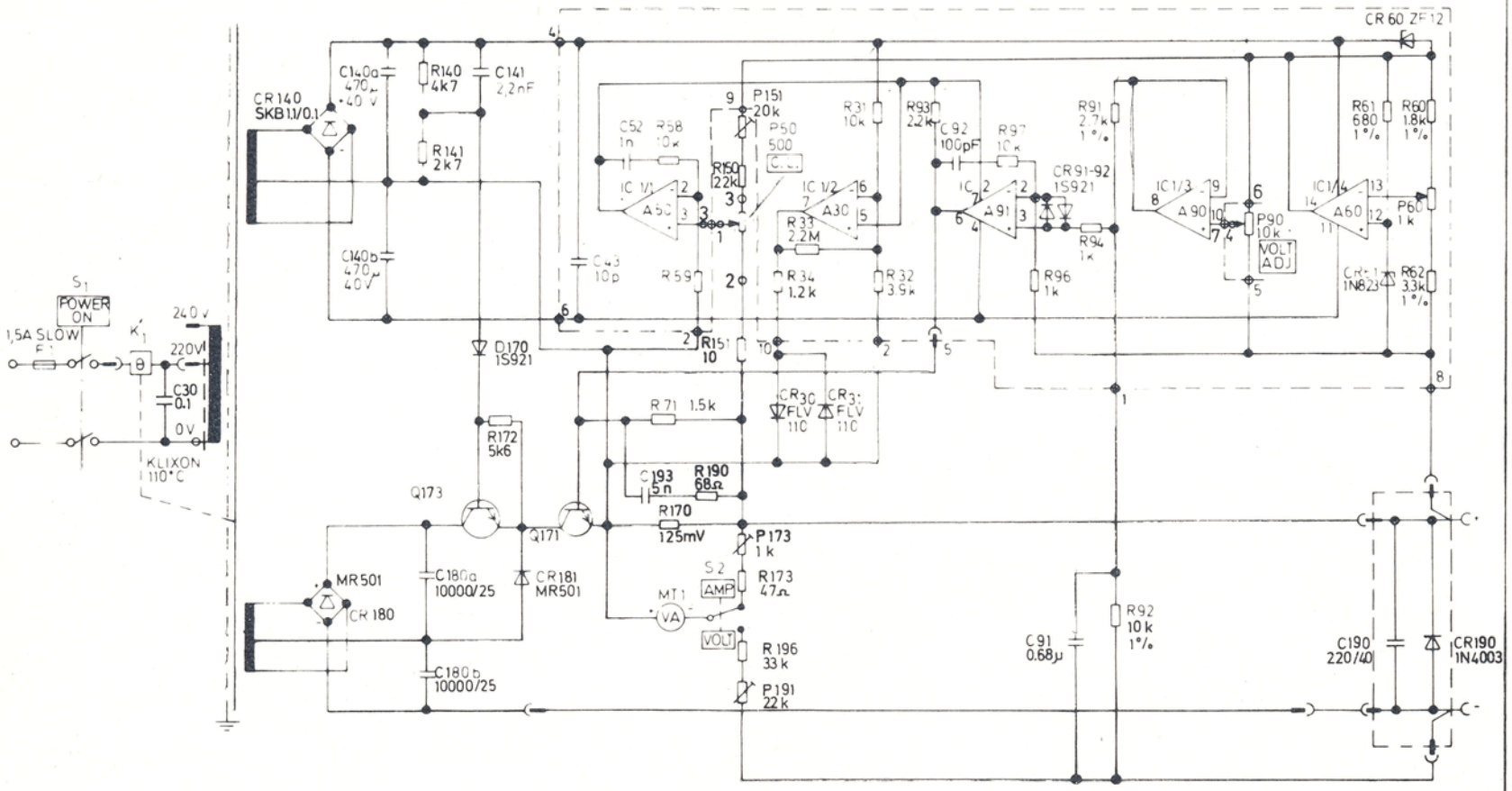

MODEL	MATERIAL	FINISH

MODEL LABPAC 602-3	MATERIAL	FINISH	
OLTRONIX	0-30 V 1.4 A B 602D 0-30 V 1.0 A B 603D VERSION A PCB Reg: M10 4918	PART NO.	SCALE
		DR 1976-02-13 BF	APPD
		260 – 73 – 2	REV

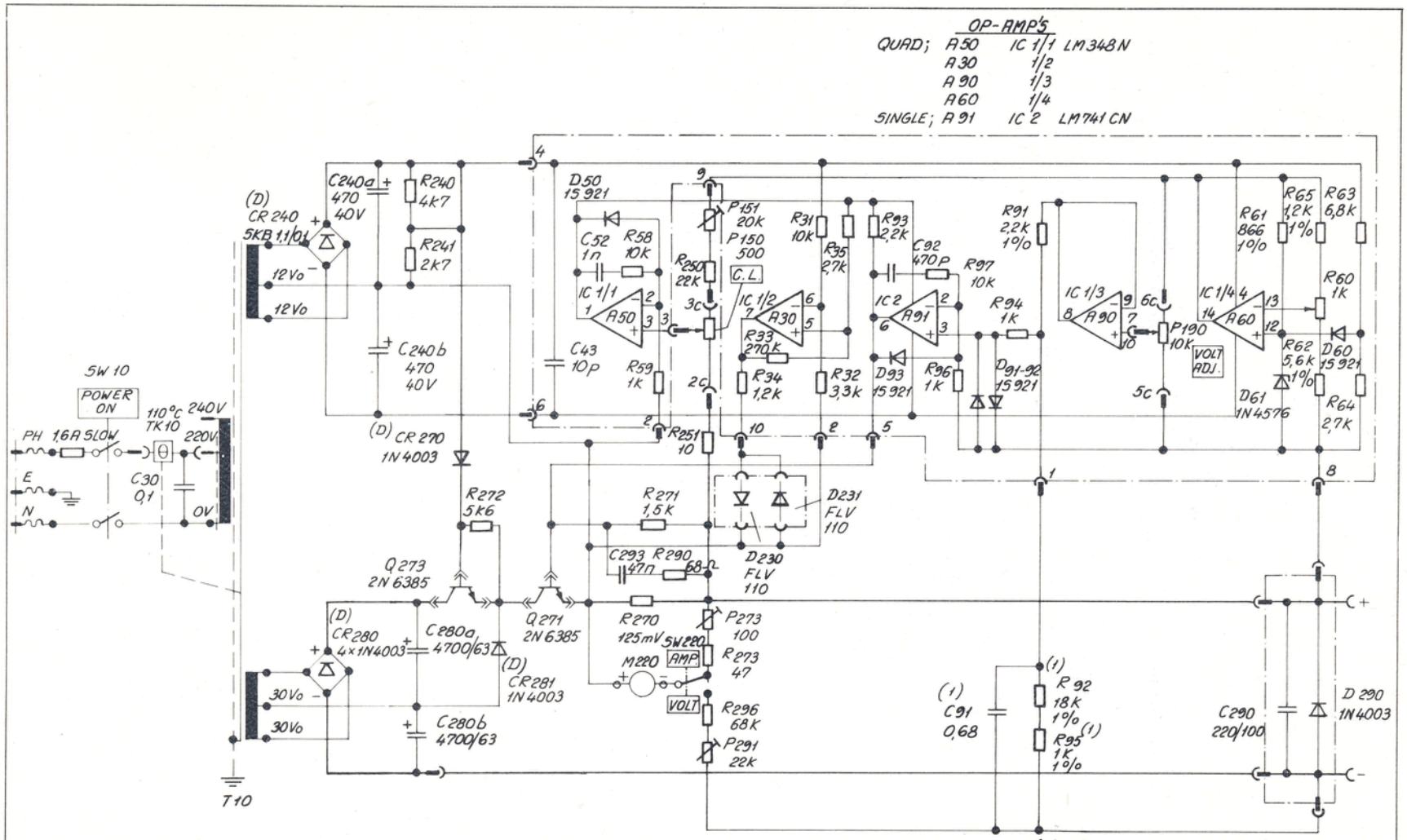

N.B. ALL RESISTOR VALUES IN OHM'S, UNLESS OTHERWISE SPEC.
ALL CAPACITOR -"- µF -"- -"- -"-

VERSION B

(1) On PC REG. BOARD IN B603D

PART NO PCB Reg: M105700	SCALE	OLTRONIX	NAME 0-60V 0,7A B602 D 0-60V 0,65A B603 D
MTRL NO			FAMILY LABPAC MODEL 602-603
SURF. TREAT.		X AB / AG / BV / GmbH	DRWG NO 260- 73- 3/1
DRAWN DATE 77.04.25 SIGN Sc/BB	FREEZE DATE SIGN		

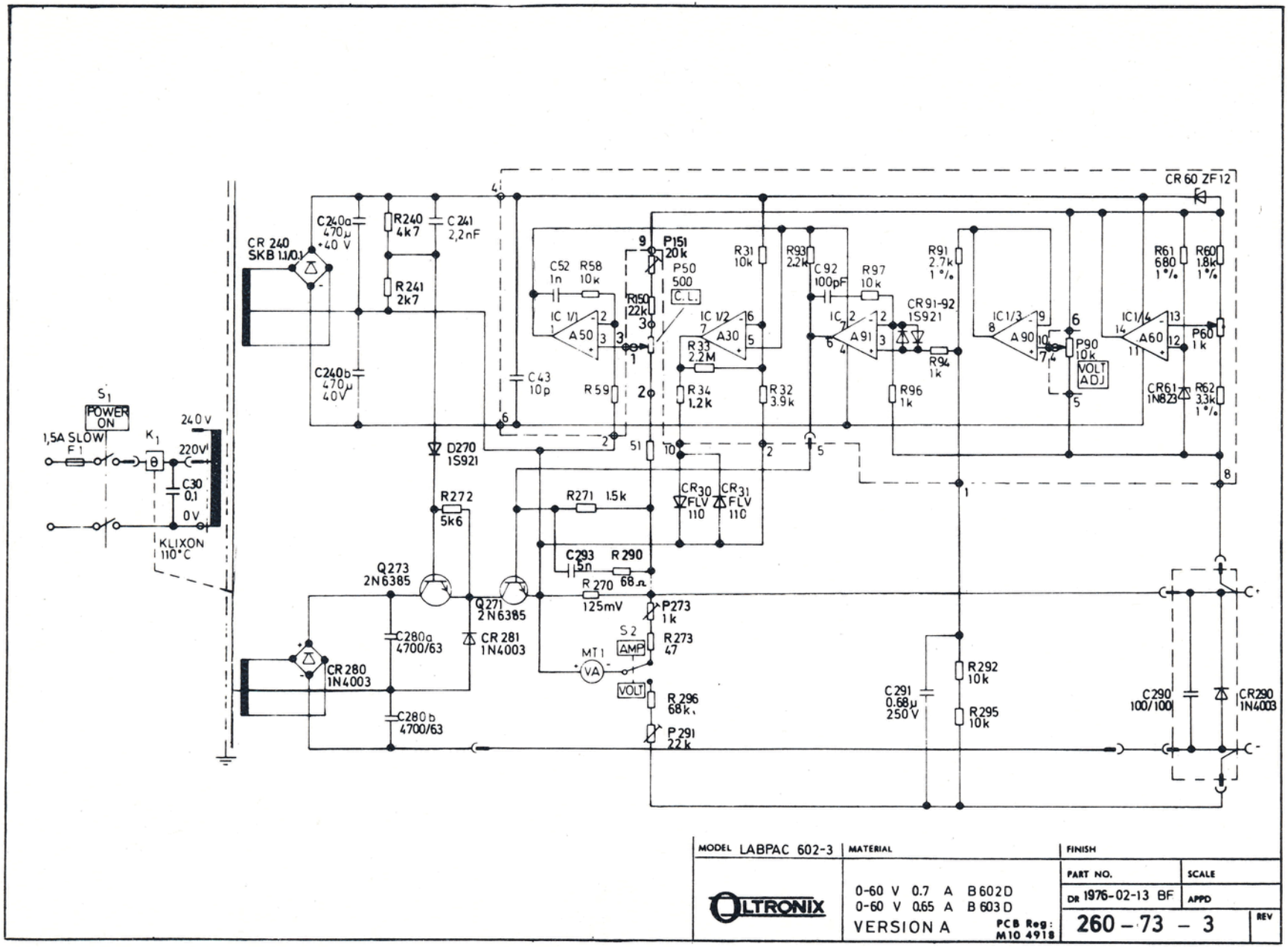

MODEL LABPAC 602-3	MATERIAL	FINISH	
OLTRONIX	0-60 V 0.7 A B 602 D 0-60 V 0.65 A B 603 D VERSION A PCB Reg: M10 4918	PART NO.	SCALE
		DR 1976-02-13 BF	APPD
		260 – 73 – 3	REV

OLTRONIX LABOR AG
Rüschlistrasse 21
CH 2502 BIEL
Switzerland
Tel: 032/23 8103
Tlx: 34637

OLTRONIX GMBH
Postfach 2011
D 757 BADEN B OOS
West Germany
Tel: 07221/61653
Tlx: 781110

POWER ELECTRONICS BV
Euroweg 15
LEEK (Gr)
Holland
Tel: 05945/2700, 2784
Tlx: 53301

OLTRONIX AB
Jämtlandsgatan 125
S-162 29 VÄLLINGBY
Sweden
Tel: 08/87 03 30
Tlx: 10738