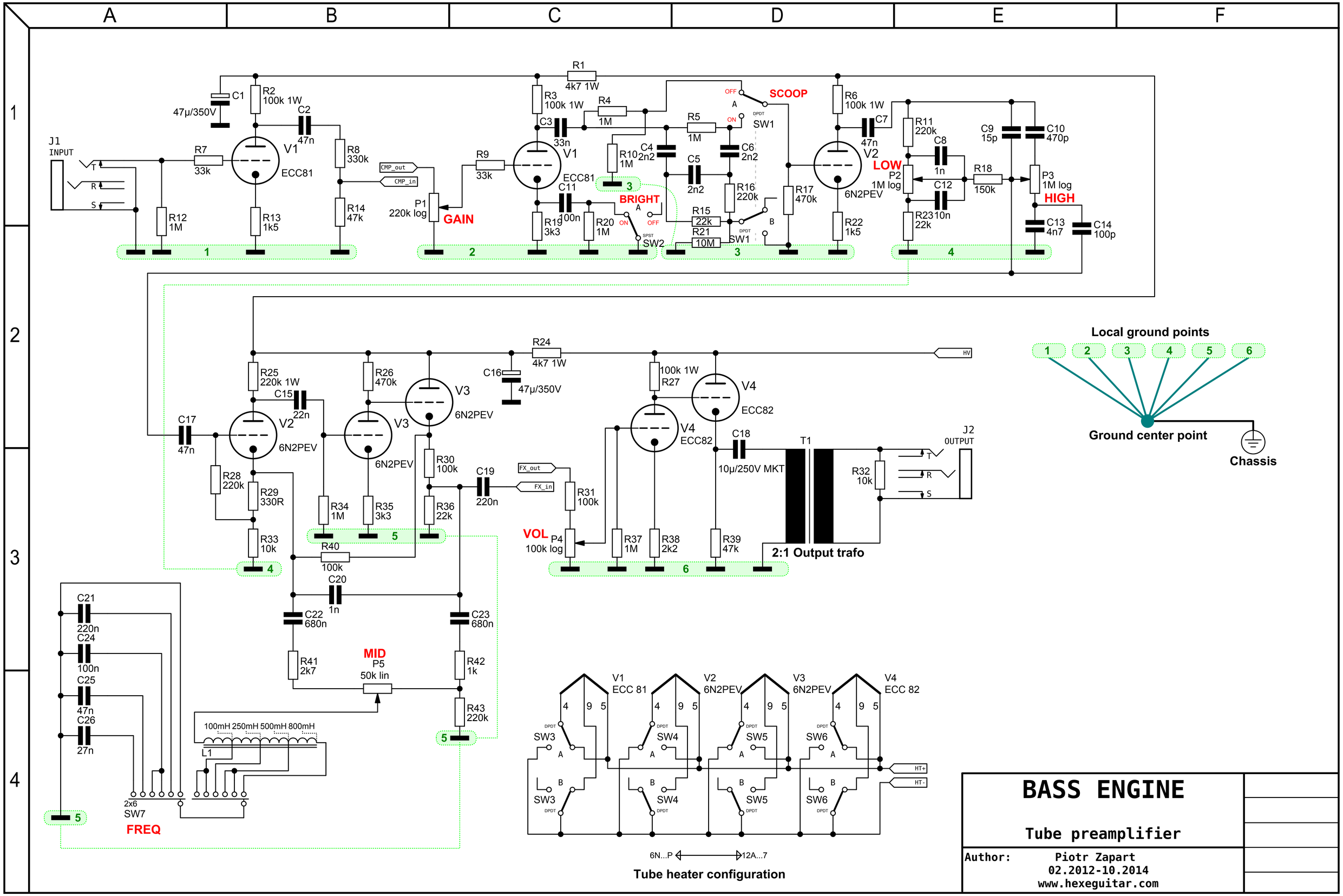
A
B
C
D
E
F
1
2
3
4
J1
INPUT
T
R
S
C1
47µ/350V
R2
100k 1W
C2
47n
V1
ECC81
R7
33k
R12
1M
R13
1k5
R8
330k
R14
47k
CMP_out
CMP_in
P1
220k log
GAIN
R9
33k
R1
4k7 1W
R3
100k 1W
C3
33n
R4
1M
V1
ECC81
C11
100n
R19
3k3
R20
1M
R10
1M
BRIGHT
SW2
SPST
ON
OFF
C4
2n2
C5
2n2
R5
1M
C6
2n2
R16
220k
R15
22k
R21
10M
SW1
DPDT
SCOOP
SW1
DPDT
OFF
ON
A
B
R17
470k
R6
100k 1W
C7
47n
V2
6N2PEV
R22
1k5
LOW
P2
1M log
R11
220k
C8
1n
C12
10n
R23
22k
R18
150k
C9
15p
C10
470p
P3
1M log
HIGH
C13
4n7
C14
100p
R24
4k7 1W
HV
C16
47µ/350V
R25
220k 1W
C15
22n
C17
47n
V2
6N2PEV
R26
470k
V3
6N2PEV
V3
6N2PEV
R28
220k
R29
330R
R33
10k
R34
1M
R35
3k3
R30
100k
R36
22k
R40
100k
C19
220n
FX_out
FX_in
R31
100k
VOL
P4
100k log
100k 1W
R27
V4
ECC82
V4
ECC82
C18
10µ/250V MKT
T1
2:1 Output trafo
R37
1M
R38
2k2
R39
47k
R32
10k
J2
OUTPUT
T
R
S
C20
1n
C22
680n
C23
680n
R41
2k7
MID
P5
50k lin
R42
1k
R43
220k
C21
220n
C24
100n
C25
47n
C26
27n
100mH 250mH 500mH 800mH
L1
2x6
SW7
FREQ
Local ground points
1
2
3
4
5
6
Ground center point
Chassis
V1
ECC 81
V2
6N2PEV
V3
6N2PEV
V4
ECC 82
SW3
SW4
SW5
SW6
DPDT
HT+
HT-
6N...P
12A...7
Tube heater configuration
BASS ENGINE
Tube preamplifier
Author:
Piotr Zapart
02.2012-10.2014
www.hexeguitar.com

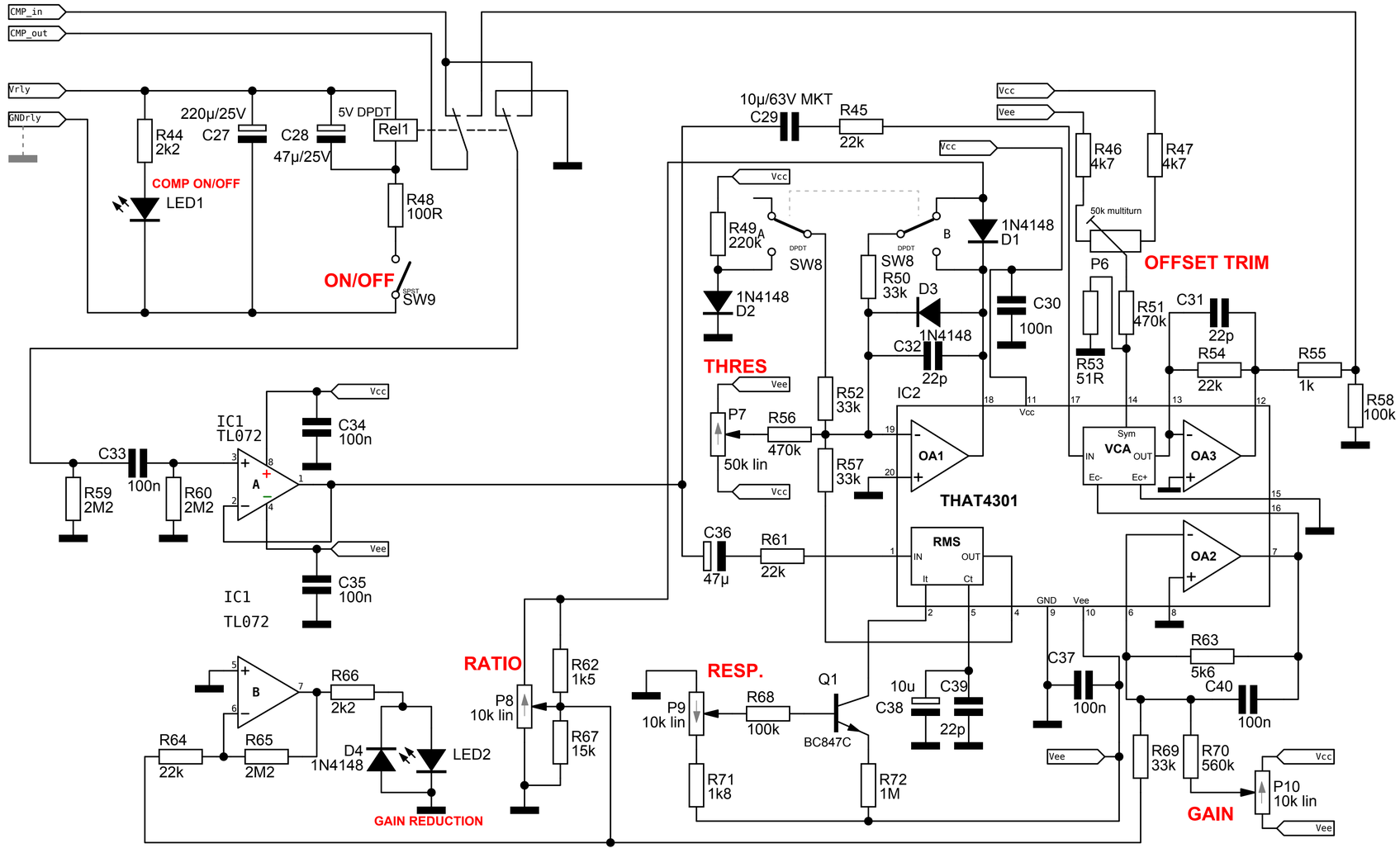

BASS ENGINE

Compressor

Author: Piotr Zapart
02.2012-10.2014
www.hexeguitar.com

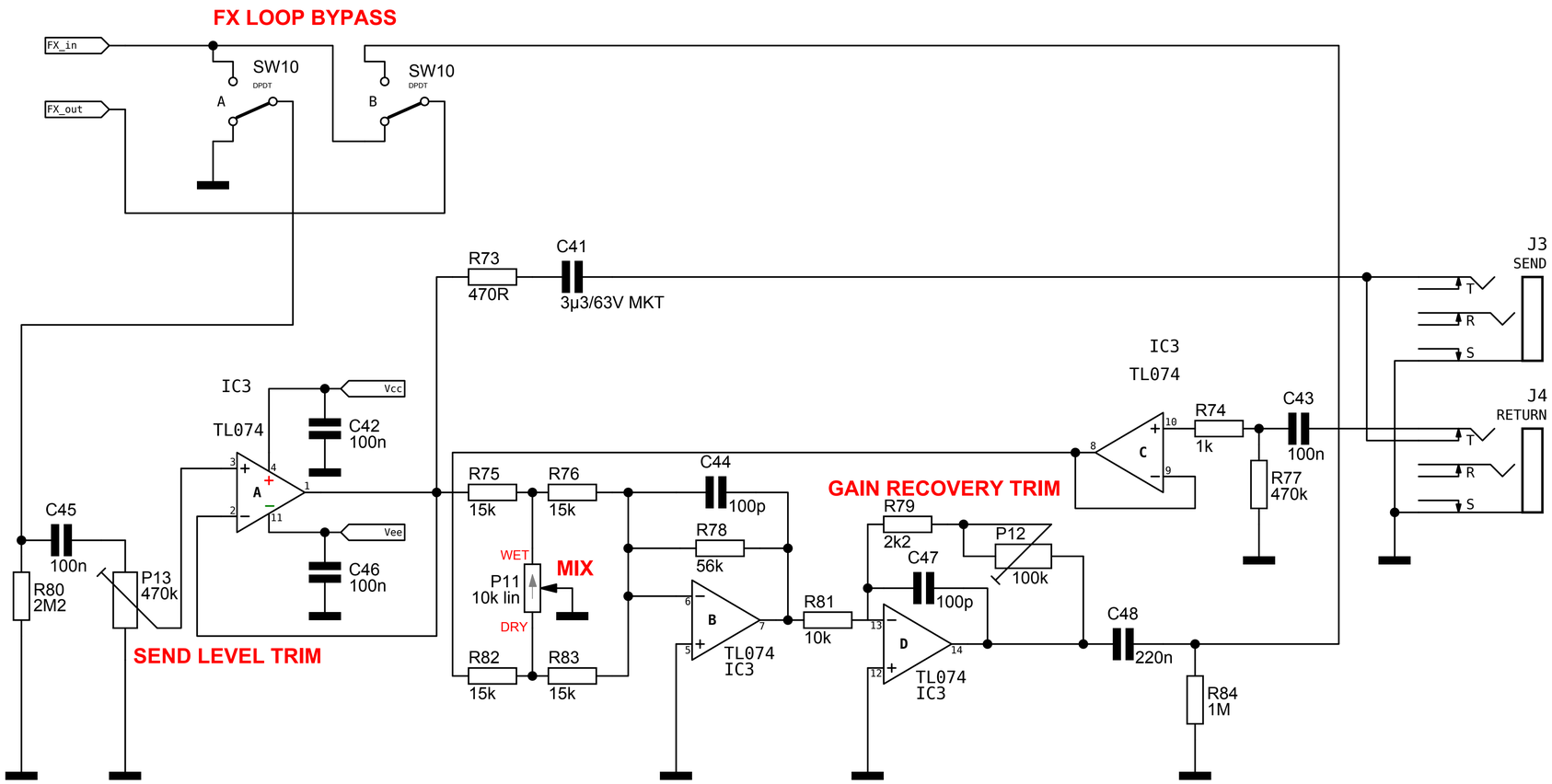

BASS ENGINE

FX Loop

Author: Piotr Zapart
02.2012-10.2014
www.hexeguitar.com

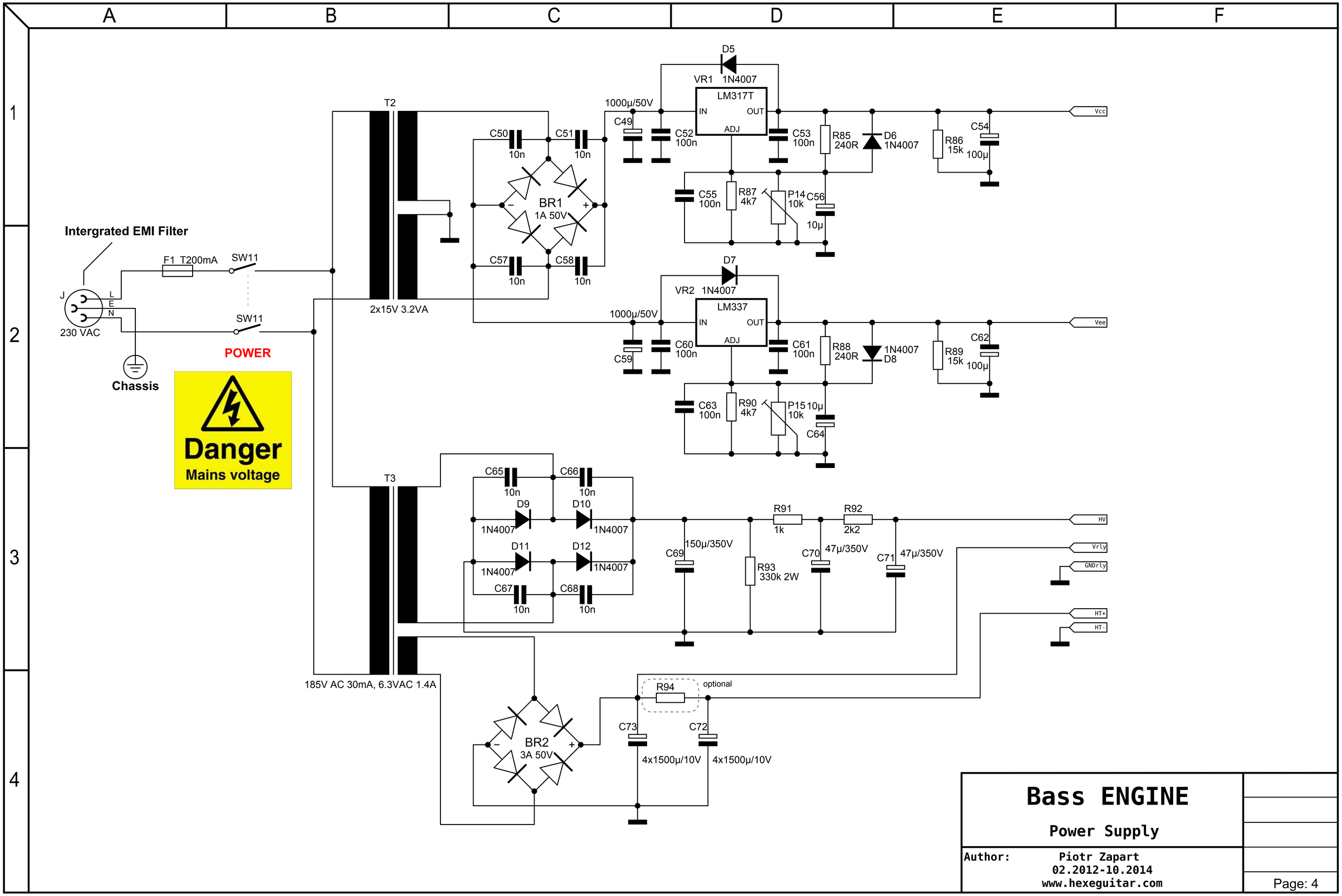

Bass ENGINE

Power Supply

Author: Piotr Zapart
02.2012-10.2014
www.hexeguitar.com