Id	Designator	Package	Quantity	Designation	Supplier and ref
1	C9,C14,C1,C6,C8,C12	Capacitor 0603	6	1u/25V MLCC	
2	C11,C13,C2,C7,C10,C3,C4,C5	Capacitor 0603	8	100n/25V MLCC	
3	D1	DO-214-AC SMA	1	SS14	
4	F1	PolyFuse 1206	1	50mA	
5	F2	PolyFuse 1206	1	100mA	
6	IC1	RpiZero GPIO connector	1	RPi_Zero (W)	
7	IC2,IC3,IC4,IC5	SOT23-5	4	SN74LV1T125DBVR	https://www.mouser.com/ProductDetail/Texas-Instruments/SN74LV1T125DBVR
8	IC6	SOP65P490X110-8AN	1	PCA9617ADPJ	http://www.mouser.com/search/ProductDetail.aspx?R=PCA9617ADPJ
9	IC7	DIP-8	1	precision socket	
10	IC8	SOT-23	1	MCP1700T-1802E/TT	
11	P1,P2	100mil pin header 01x06	2	CONN_01X06	
12	R1,R2,R7,R8	Resistor 0603	4	1k5	
13	R3,R4,R5,R6	Resistor 0603	4	33R	
14	SW1,SW2	SLB1470_1P4T_slideSW	2	APEM SLB1470	http://www.mouser.com/search/ProductDetail.aspx?r=642-SLB1470

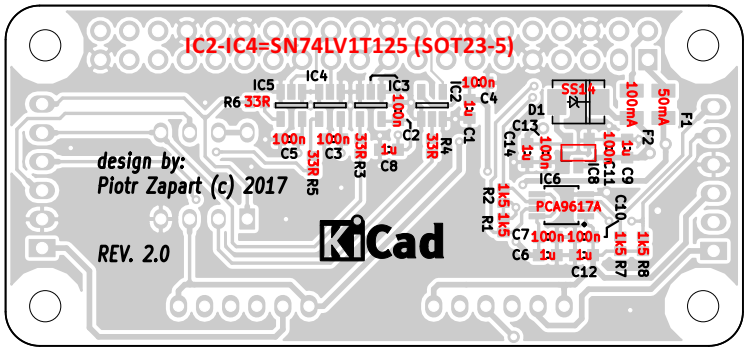

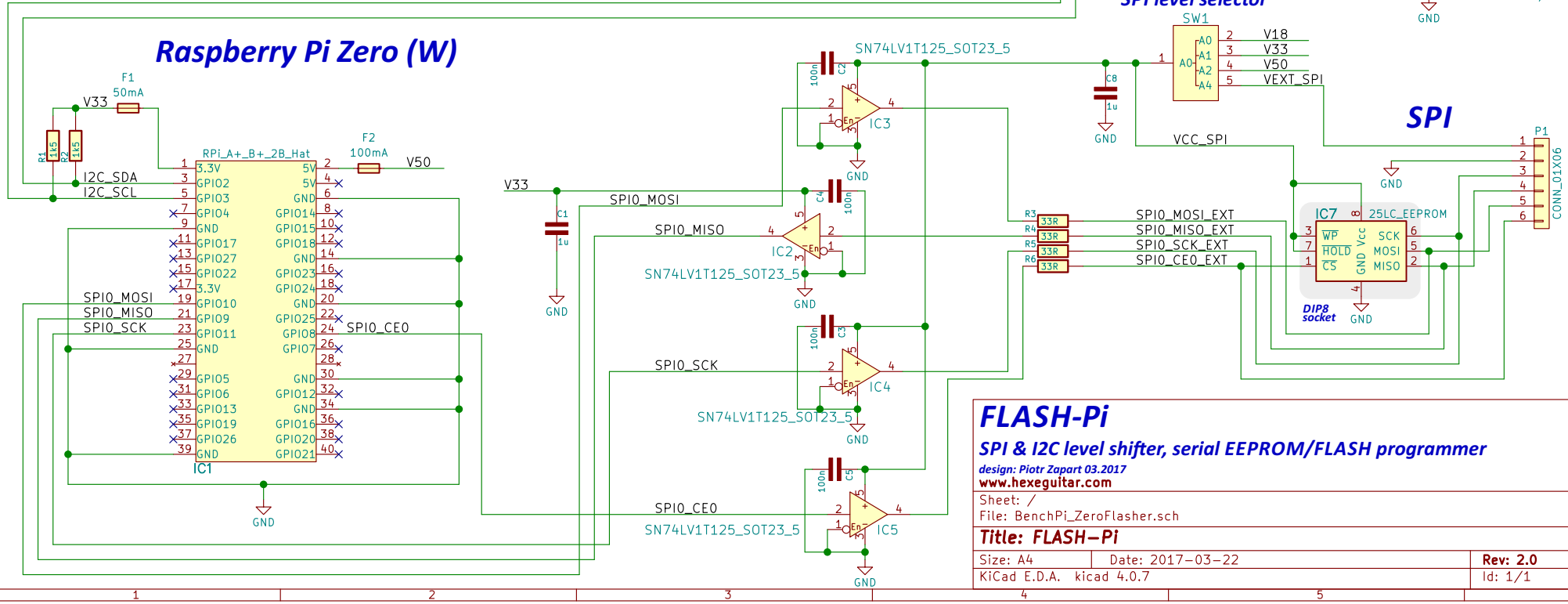

FLASH-Pi

SPI & I2C level shifter, serial EEPROM/FLASH programmer

design: Piotr Zapart 03.2017

www.hexeguitar.com

Sheet: /

File: BenchPi_ZeroFlasher.sch

Title: FLASH–Pi

Size: A4	Date: 2017–03–22	Rev: 2.0
KiCad E.D.A. kicad 4.0.7		Id: 1/1