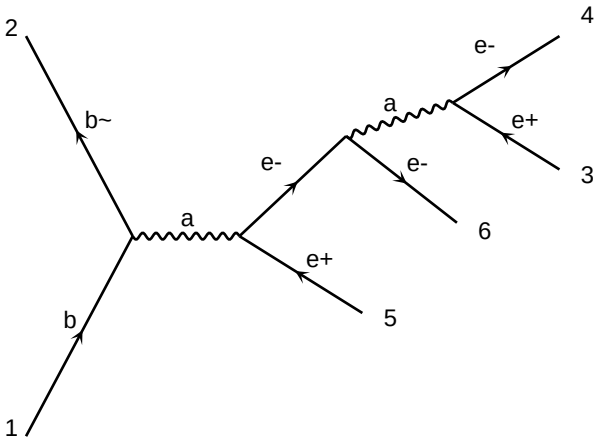

diagram 1 NP=0, NPcG=0, NPcGtil=0, NPcH=0, NPcHB=0, NPcHBtil=0, NPcHDD=0, NPcHG=0, NPcHGtil=0, NP

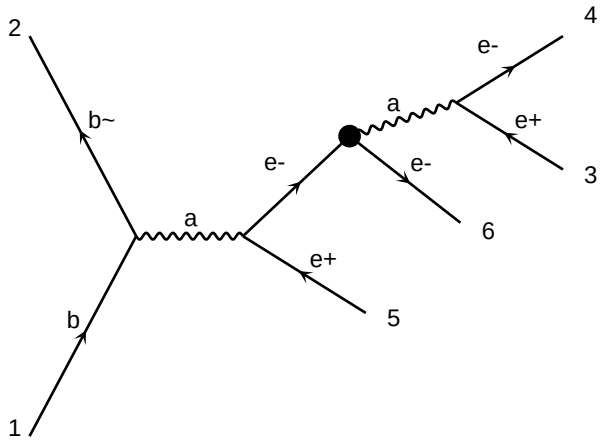

diagram 2 NP=1, NPcG=0, NPcGtil=0, NPcH=0, NPcHB=0, NPcHBtil=0, NPcHDD=0, NPcHG=0, NPcHGtil=0, NP

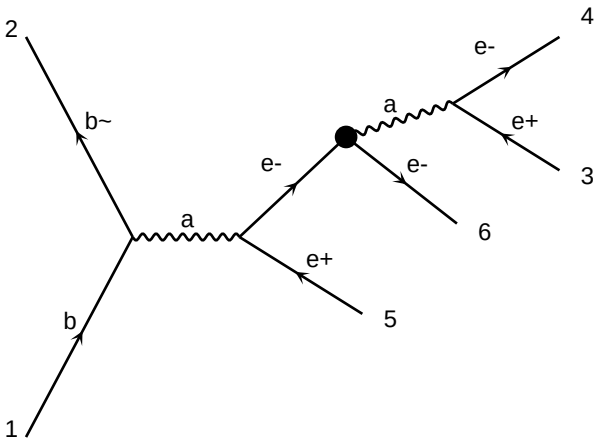

diagram 3 NP=1, NPcG=0, NPcGtil=0, NPcH=0, NPcHB=0, NPcHBtil=0, NPcHDD=0, NPcHG=0, NPcHGtil=0, NP

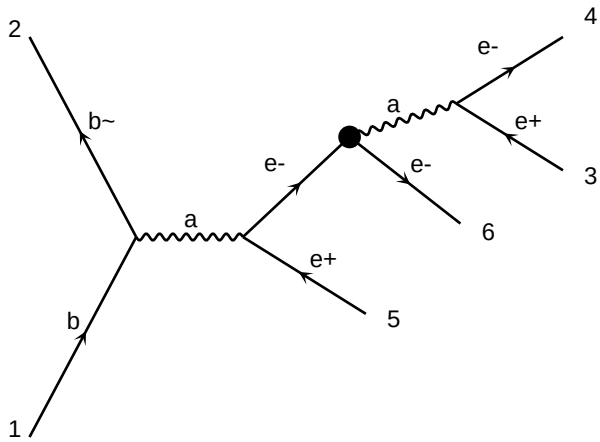

diagram 4 NP=1, NPcG=0, NPcGtil=0, NPcH=0, NPcHB=0, NPcHBtil=0, NPcHDD=0, NPcHG=0, NPcHGtil=0, NP

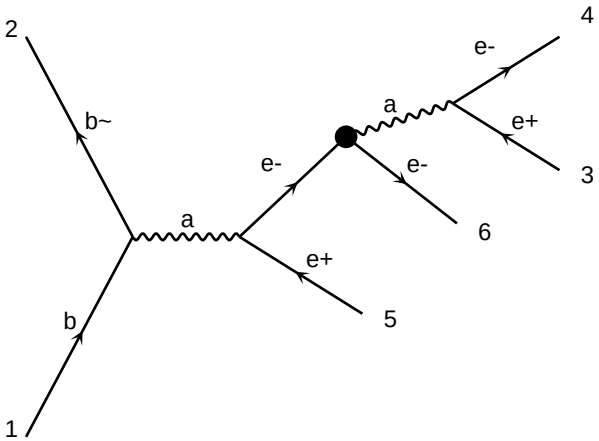

diagram 5 NP=1, NPcG=0, NPcGtil=0, NPcH=0, NPcHB=0, NPcHBtil=0, NPcHDD=0, NPcHG=0, NPcHGtil=0, NP

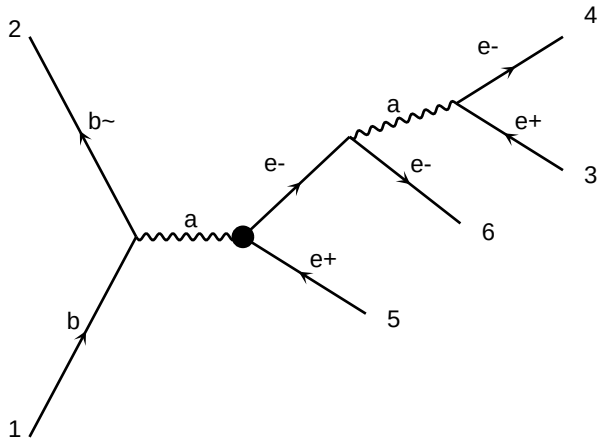

diagram 6 NP=1, NPcG=0, NPcGtil=0, NPcH=0, NPcHB=0, NPcHBtil=0, NPcHDD=0, NPcHG=0, NPcHGtil=0, NP

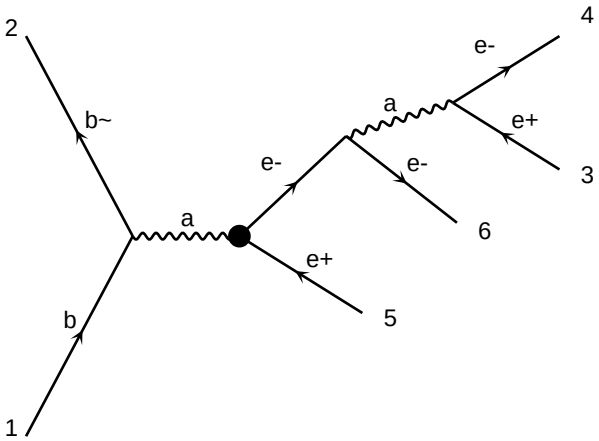

diagram 7 NP=1, NPcG=0, NPcGtil=0, NPcH=0, NPcHB=0, NPcHBtil=0, NPcHDD=0, NPcHG=0, NPcHGtil=0, NP

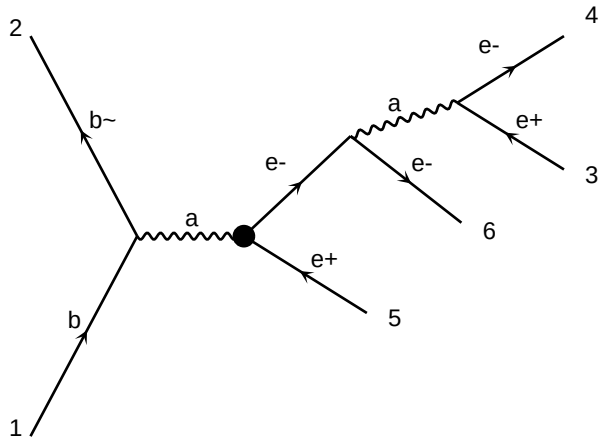

diagram 8 NP=1, NPcG=0, NPcGtil=0, NPcH=0, NPcHB=0, NPcHBtil=0, NPcHDD=0, NPcHG=0, NPcHGtil=0, NP

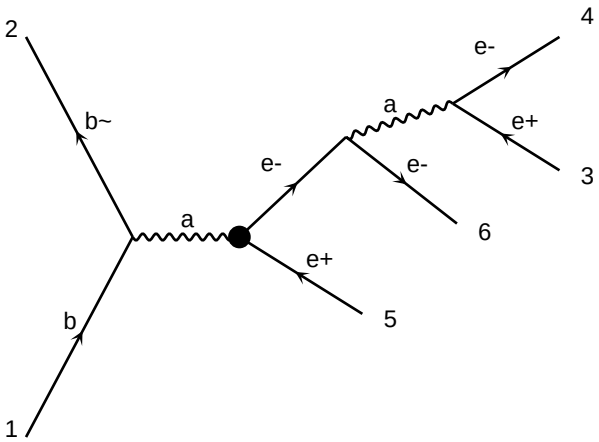

diagram 9 NP=1, NPcG=0, NPcGtil=0, NPcH=0, NPcHB=0, NPcHBtil=0, NPcHDD=0, NPcHG=0, NPcHGtil=0, NP

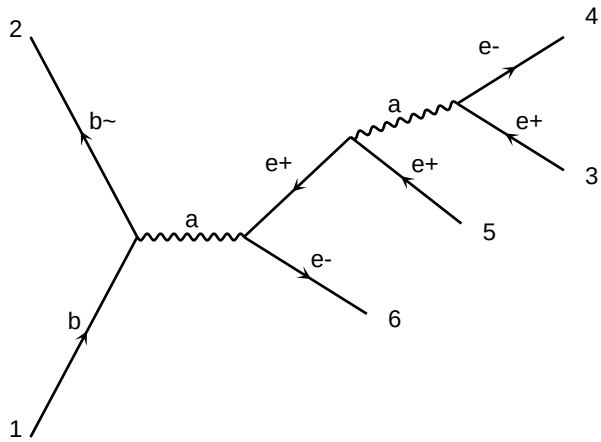

diagram 10 NP=1, NPcG=0, NPcGtil=0, NPcH=0, NPcHB=0, NPcHBtil=0, NPcHDD=0, NPcHG=0, NPcHGtil=0, NP

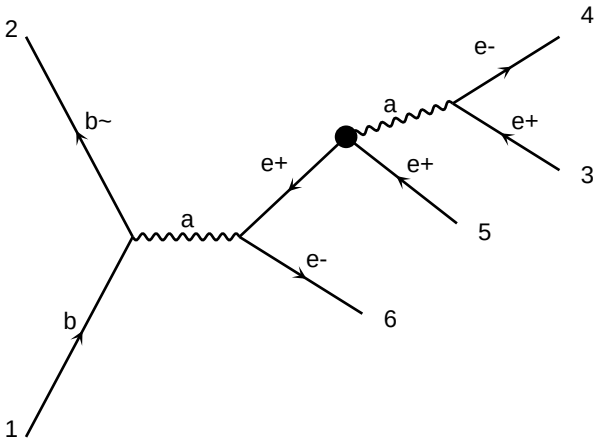

diagram 11 NP=1, NPcG=0, NPcGtil=0, NPcH=0, NPcHB=0, NPcHBtil=0, NPcHDD=0, NPcHG=0, NPcHGtil=0, NP

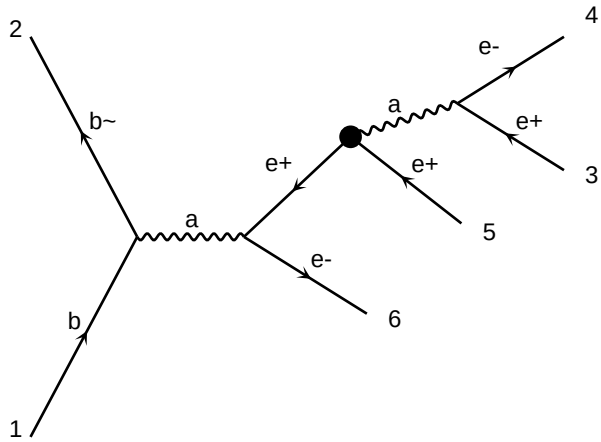

diagram 12 NP=1, NPcG=0, NPcGtil=0, NPcH=0, NPcHB=0, NPcHBtil=0, NPcHDD=0, NPcHG=0, NPcHGtil=0, NP

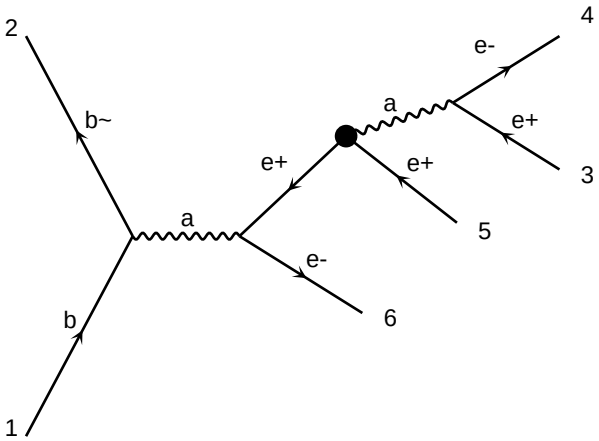

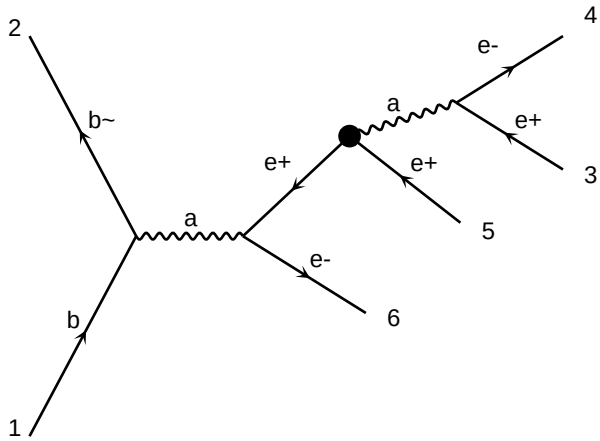

diagram 13 NP=1, NPcG=0, NPcGtil=0, NPcH=0, NPcHB=0, NPcHBtil=0, NPcHDD=0, NPcHG=0, NPcHGtil=0, NP

diagram 14 NP=1, NPcG=0, NPcGtil=0, NPcH=0, NPcHB=0, NPcHBtil=0, NPcHDD=0, NPcHG=0, NPcHGtil=0, NP

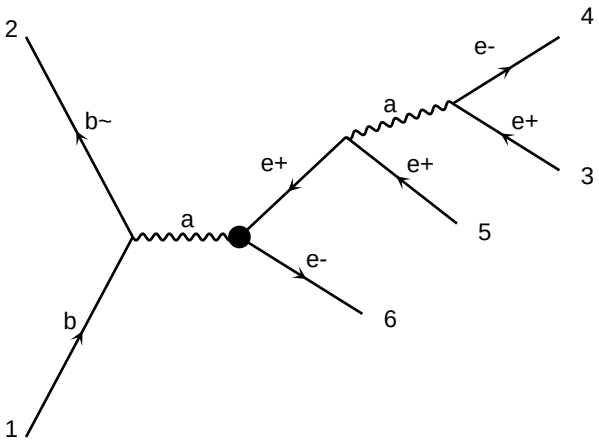

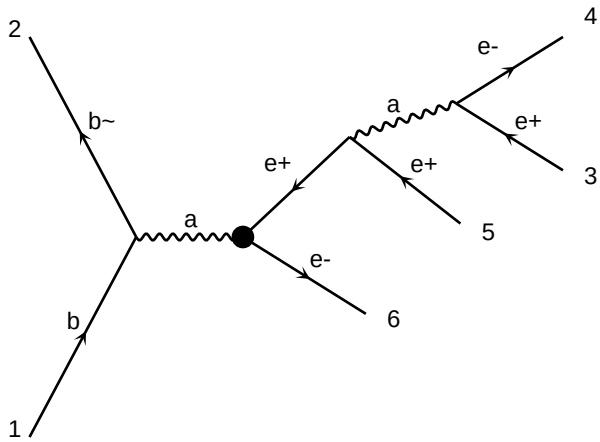

diagram 15 NP=1, NPcG=0, NPcGtil=0, NPcH=0, NPcHB=0, NPcHBtil=0, NPcHDD=0, NPcHG=0, NPcHGtil=0, NP

diagram 16 NP=1, NPcG=0, NPcGtil=0, NPcH=0, NPcHB=0, NPcHBtil=0, NPcHDD=0, NPcHG=0, NPcHGtil=0, NP

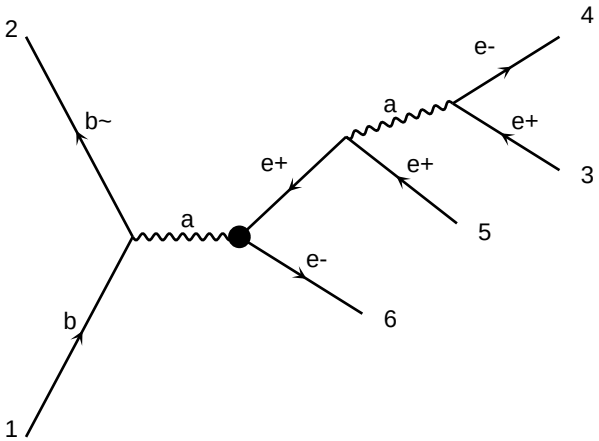

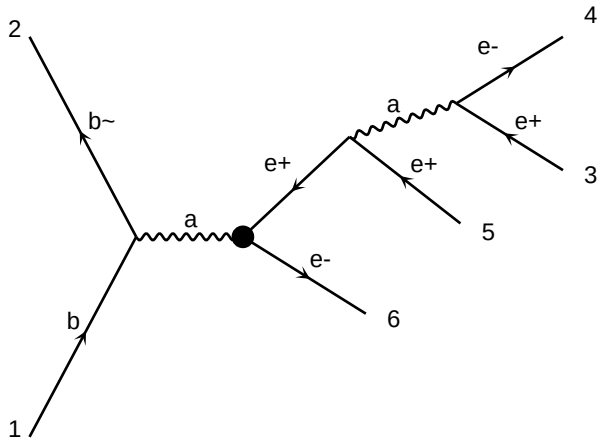

diagram 17 NP=1, NPcG=0, NPcGtil=0, NPcH=0, NPcHB=0, NPcHBtil=0, NPcHDD=0, NPcHG=0, NPcHGtil=0, NP

diagram 18 NP=1, NPcG=0, NPcGtil=0, NPcH=0, NPcHB=0, NPcHBtil=0, NPcHDD=0, NPcHG=0, NPcHGtil=0, NP

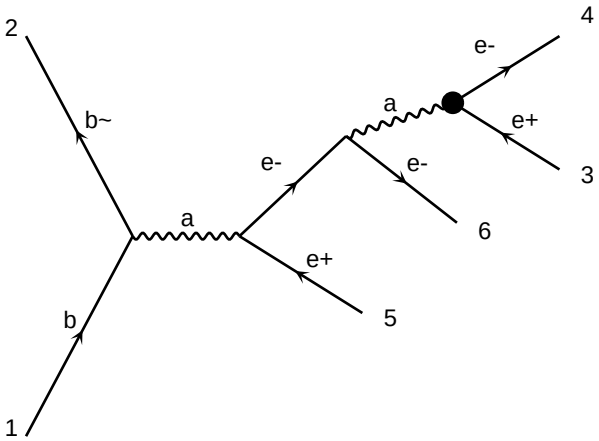

diagram 19 NP=1, NPcG=0, NPcGtil=0, NPcH=0, NPcHB=0, NPcHBtil=0, NPcHDD=0, NPcHG=0, NPcHGtil=0, NP

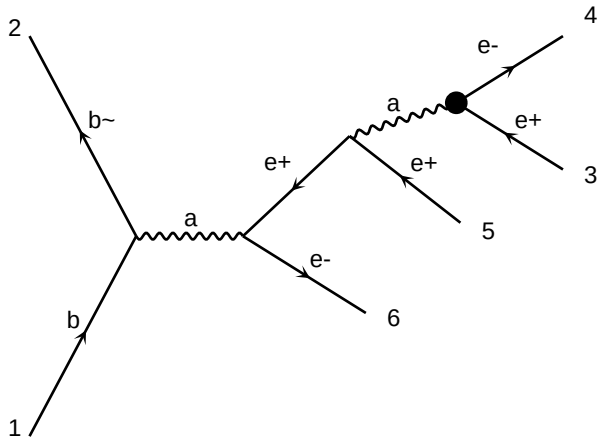

diagram 20 NP=1, NPcG=0, NPcGtil=0, NPcH=0, NPcHB=0, NPcHBtil=0, NPcHDD=0, NPcHG=0, NPcHGtil=0, NP

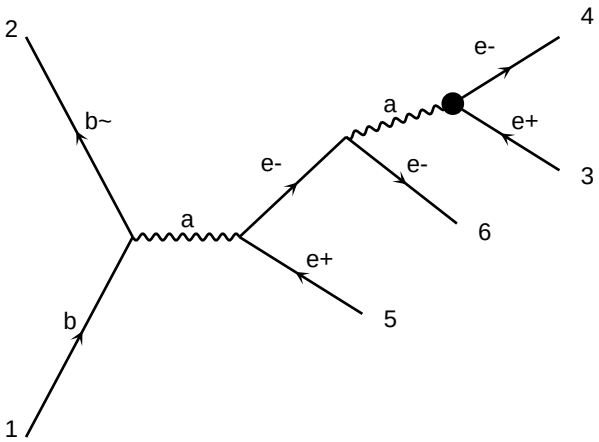

diagram 21 NP=1, NPcG=0, NPcGtil=0, NPcH=0, NPcHB=0, NPcHBtil=0, NPcHDD=0, NPcHG=0, NPcHGtil=0, NP

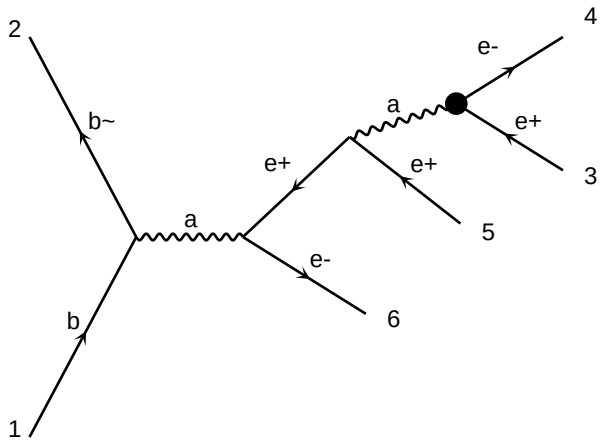

diagram 22 NP=1, NPcG=0, NPcGtil=0, NPcH=0, NPcHB=0, NPcHBtil=0, NPcHDD=0, NPcHG=0, NPcHGtil=0, NP

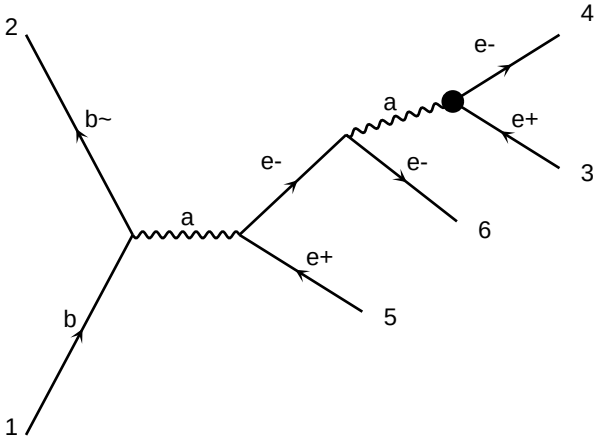

diagram 23 NP=1, NPcG=0, NPcGtil=0, NPcH=0, NPcHB=0, NPcHBtil=0, NPcHDD=0, NPcHG=0, NPcHGtil=0, NP

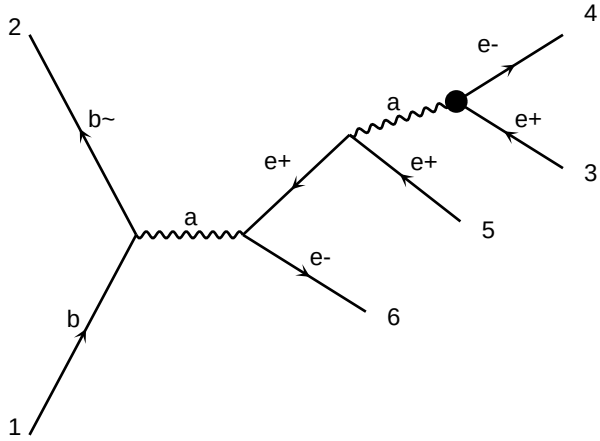

diagram 24 NP=1, NPcG=0, NPcGtil=0, NPcH=0, NPcHB=0, NPcHBtil=0, NPcHDD=0, NPcHG=0, NPcHGtil=0, NP

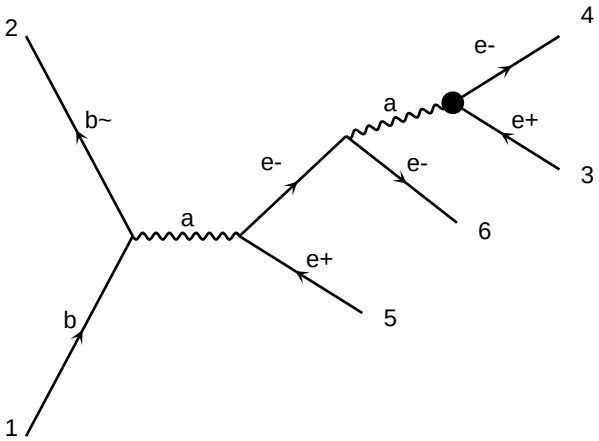

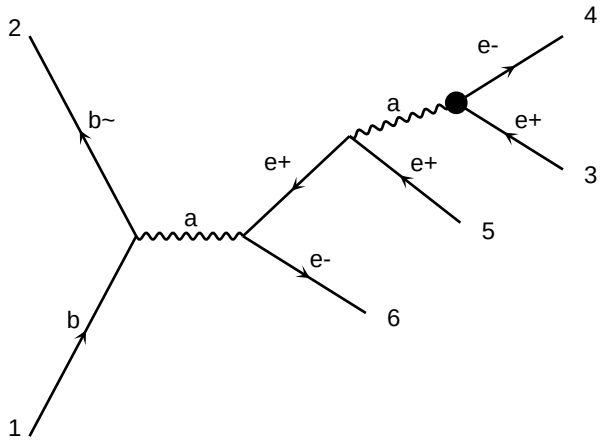

diagram 25 NP=1, NPcG=0, NPcGtil=0, NPcH=0, NPcHB=0, NPcHBtil=0, NPcHDD=0, NPcHG=0, NPcHGtil=0, NP

diagram 26 NP=1, NPcG=0, NPcGtil=0, NPcH=0, NPcHB=0, NPcHBtil=0, NPcHDD=0, NPcHG=0, NPcHGtil=0, NP

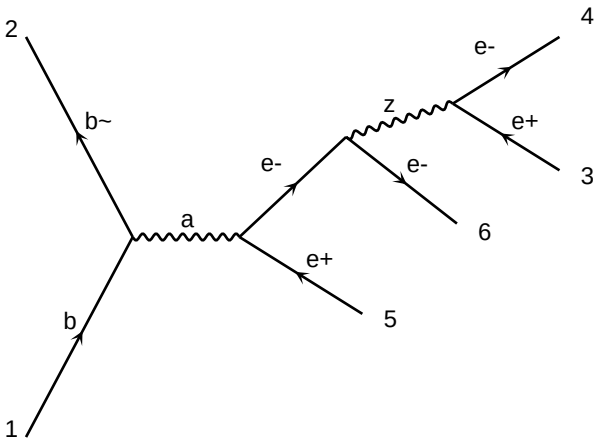

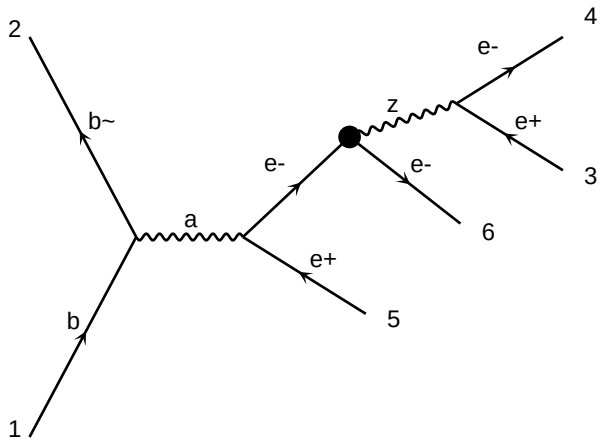

diagram 27 NP=0, NPcG=0, NPcGtil=0, NPcH=0, NPcHB=0, NPcHBtil=0, NPcHDD=0, NPcHG=0, NPcHGtil=0, NP

diagram 28 NP=1, NPcG=0, NPcGtil=0, NPcH=0, NPcHB=0, NPcHBtil=0, NPcHDD=0, NPcHG=0, NPcHGtil=0, NP

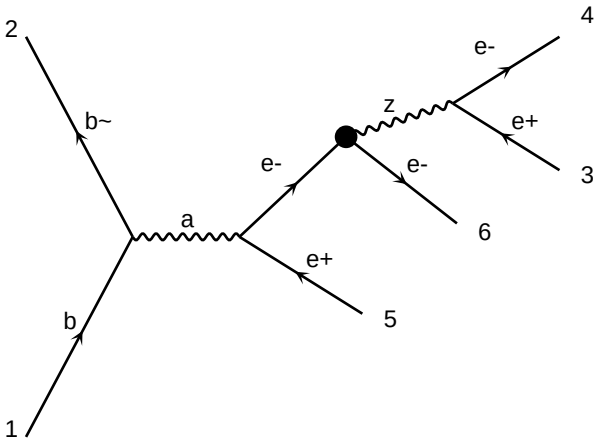

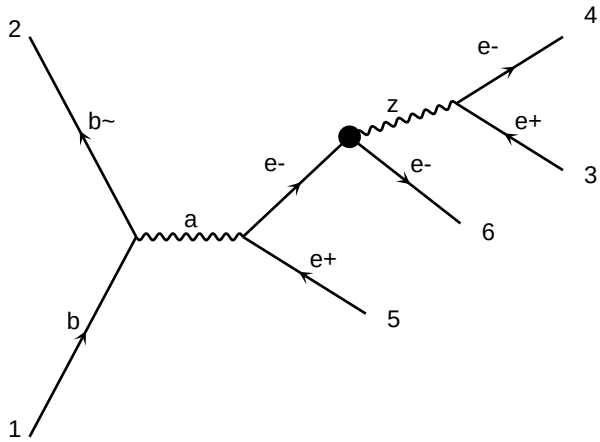

diagram 29 NP=1, NPcG=0, NPcGtil=0, NPcH=0, NPcHB=0, NPcHBtil=0, NPcHDD=0, NPcHG=0, NPcHGtil=0, NP

diagram 30 NP=1, NPcG=0, NPcGtil=0, NPcH=0, NPcHB=0, NPcHBtil=0, NPcHDD=0, NPcHG=0, NPcHGtil=0, NP

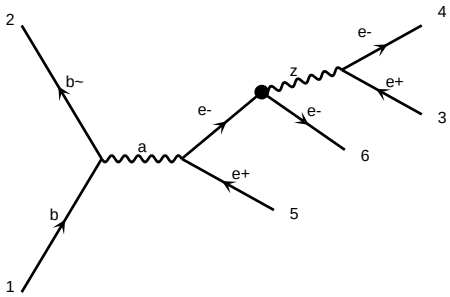

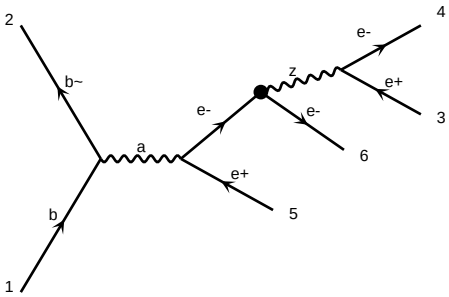

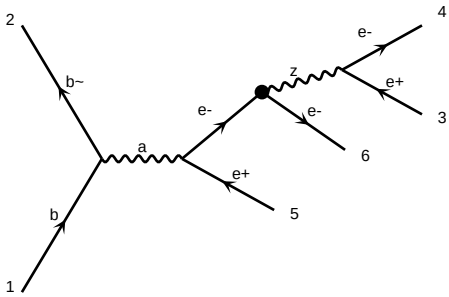

diagram 31 NP=1, NPcG=0, NPcGtil=0, NPcH=0, NPcHB=0, NPcHDD=1, NPcHW=0, NPcHWB=0, NPcW=0, NPdcHB=0, NPdcHW=0, NPeHB=0, NPeHW=0, NPeW=0, NPlH1=0, NPlH2=0, NPlHB=0, NPlHW=0, NPlW=0, NPqG=0, NPqGtil=0, NPqH=0, NPqHB=0, NPqHW=0, NPqW=0, NPuG=0, NPuH=0, NPuHB=0, NPuW=0, NPuuVR=0, NPuuVV=0

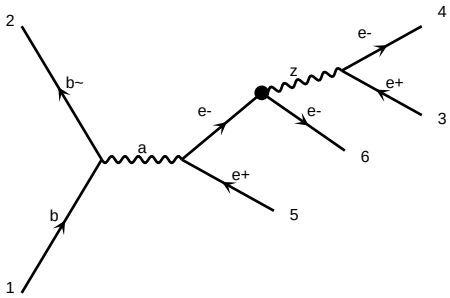

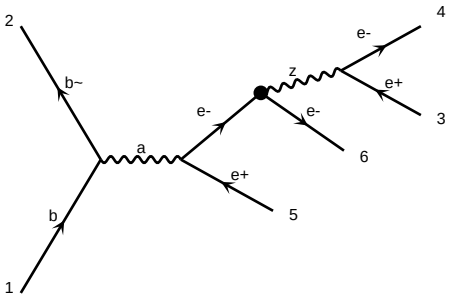

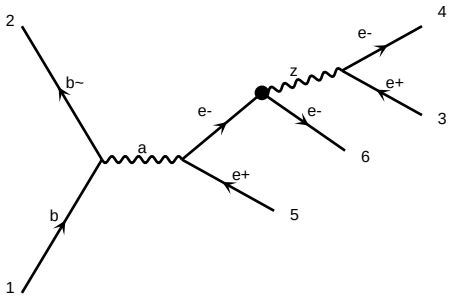

diagram 34 NP=1, NPcG=0, NPcGtil=0, NPcH=0, NPcHB=0, NPcHDD=1, NPcHW=0, NPcHWB=0, NPcW=0, NPdcHB=0, NPdcHW=0, NPeHB=0, NPeHW=0, NPeW=0, NPlH1=0, NPlH2=0, NPlHB=0, NPlHW=0, NPlW=0, NPqG=0, NPqGtil=0, NPqH=0, NPqHB=0, NPqHW=0, NPqW=0, NPuG=0, NPuH=0, NPuHB=0, NPuW=0, NPuuVR=0, NPuuVV=0

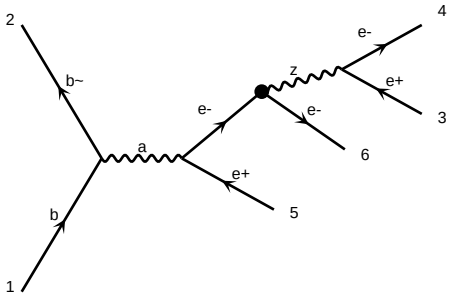

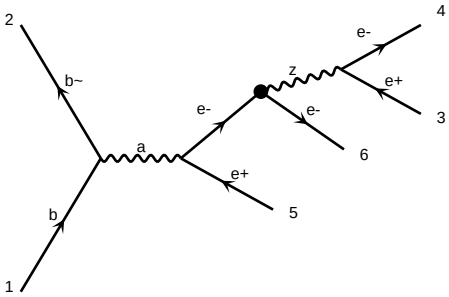

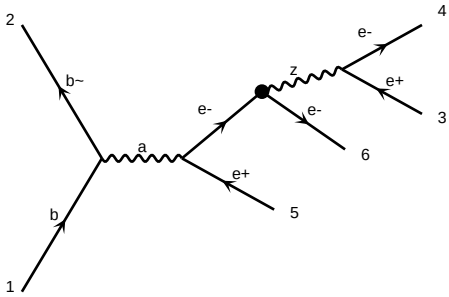

diagram 37 NP=1, NPcG=0, NPcGtil=0, NPcH=0, NPcHB=0, NPcHDD=1, NPcHW=0, NPcHWB=0, NPcW=0, NPdcHB=0, NPdcHW=0, NPeHB=0, NPeHW=0, NPeW=0, NPlH1=0, NPlH2=0, NPlHB=0, NPlHW=0, NPlW=0, NPqG=0, NPqGtil=0, NPqH=0, NPqHB=0, NPqHW=0, NPqW=0, NPuG=0, NPuH=0, NPuHB=0, NPuW=0, NPuuVR=0, NPuuVV=0

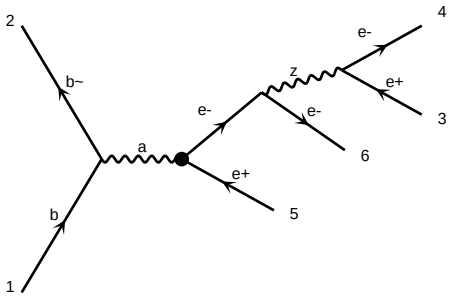

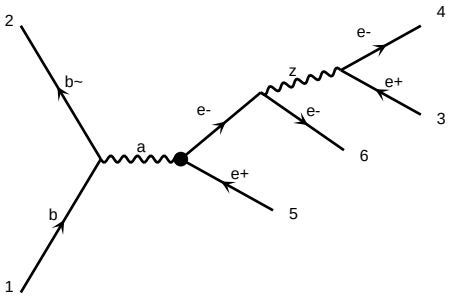

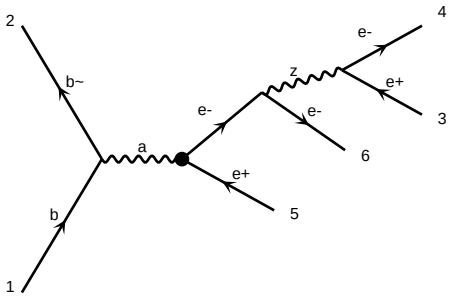

diagram 40 NP=1, NPcG=0, NPcGtil=0, NPcH=0, NPcHB=0, NPcHDD=1, NPcHW=0, NPcHWB=0, NPcW=0, NPdcHB=0, NPdcHW=0, NPeHB=0, NPeHW=0, NPeW=0, NPlH1=0, NPlH2=0, NPlHB=0, NPlHW=0, NPlW=0, NPqG=0, NPqGtil=0, NPqH=0, NPqHB=0, NPqHW=0, NPqW=0, NPuG=0, NPuH=0, NPuHB=0, NPuW=0, NPuuVR=0, NPuuVV=0

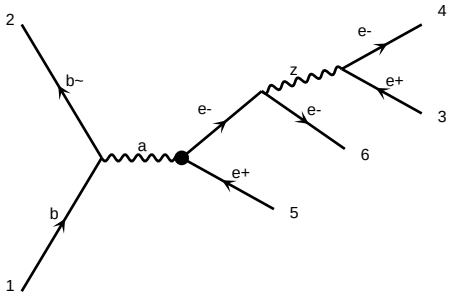

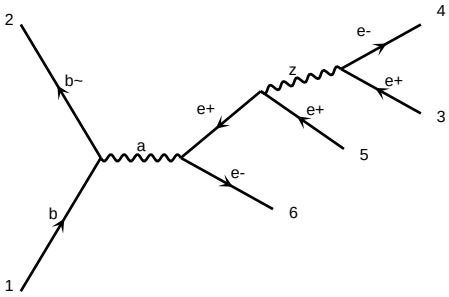

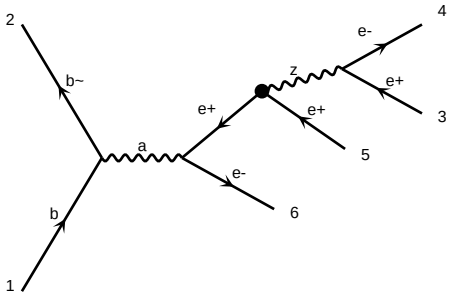

diagram 43 NP=1, NPcG=0, NPcGtil=0, NPcH=0, NPcHB=0, NPcHDD=1, NPcHW=0, NPcHWB=0, NPcW=0, NPdcHB=0, NPdcHW=0, NPeHB=0, NPeHW=0, NPeW=0, NPlH1=0, NPlH2=0, NPlHB=0, NPlHW=0, NPlW=0, NPqG=0, NPqGtil=0, NPqH=0, NPqHB=0, NPqHW=0, NPqW=0, NPuG=0, NPuH=0, NPuHB=0, NPuW=0, NPuuVR=0, NPuuVV=0

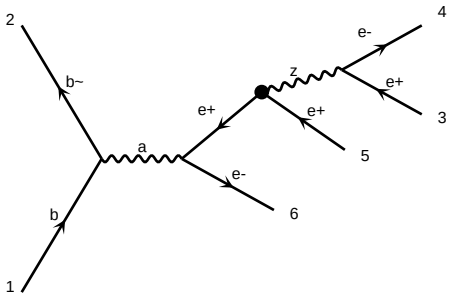

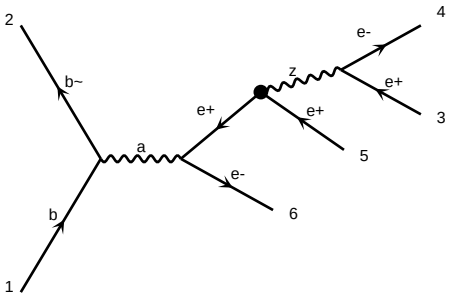

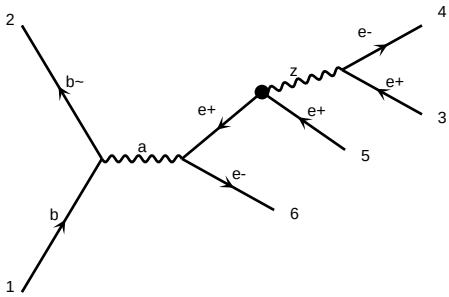

diagram 46 NP=1, NPcG=0, NPcGtil=0, NPcH=0, NPcHB=0, NPcHDD=0, NPcHW=0, NPcHWB=0, NPcW=0, NPcWtil=0, NPdcHW=0, NPdcHWtil=0, NPeHB=0, NPeHW=0, NPeW=0, NPlH1=0, NPlH2=0, NPlHDC=0, NPlL1=0, NPlL2=0, NPlLRL=0, NPlQ1=0, NPlQ3=0, NPlebH=0, NPledjQ=0, NPlelQ1=0, NPlelQ3=0, NPleu=0, NPlfu1=0, NPlfu2

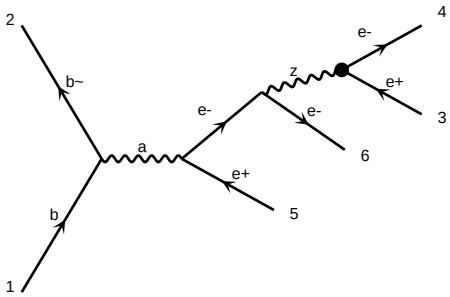

diagram 61 NP=1, NPcG=0, NPcGtil=0, NPcH=0, NPcHB=0, NPcHBtil=0, NPcHDD=0, NPcHW=0, NPcHWB=0, NPcHWtil=0, NPcHWtilB=0, NPcW=0, NPcWtil=0, NPdHB=0, NPdHW=0, NPeHB=0, NPeHW=0, NPeW=0, NPlH1=0, NPlH2=0, NPlHB=0, NPlHW=0, NPlW=0, NPuG=0, NPuH=0, NPuW=0

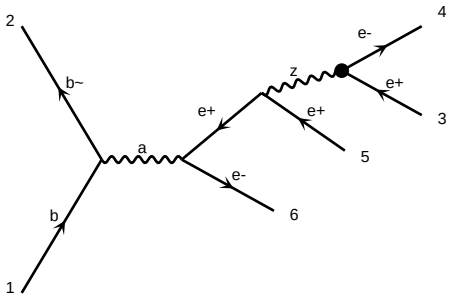

diagram 64 NP=1, NPcG=0, NPcGtil=0, NPcH=0, NPcHB=0, NPcHBtil=0, NPcHDD=0, NPcHW=0, NPcHWB=0, NPcHWtil=0, NPcHWtilB=0, NPcW=0, NPcWtil=0, NPdHB=0, NPdHW=0, NPeHB=0, NPeHW=0, NPeW=0, NPlH1=0, NPlH2=0, NPlHB=0, NPlHW=0, NPlW=0, NPuG=0, NPuH=0, NPuW=0

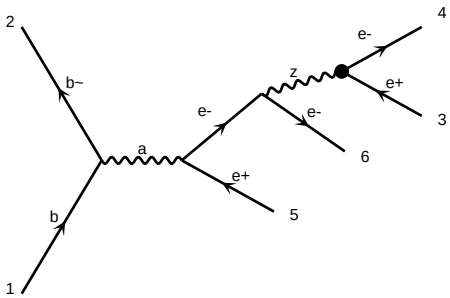

diagram 67 NP=1, NPcG=0, NPcGtil=0, NPcH=0, NPcHB=0, NPcHBtil=0, NPcHDD=0, NPcHW=0, NPcHWB=0, NPcHWtil=0, NPcHWtilB=0, NPcW=0, NPcWtil=0, NPdHB=0, NPdHW=0, NPeHB=0, NPeHW=0, NPeW=0, NPlH1=0, NPlH2=0, NPlHB=0, NPlHW=0, NPlW=0, NPuG=0, NPuH=0, NPuW=0

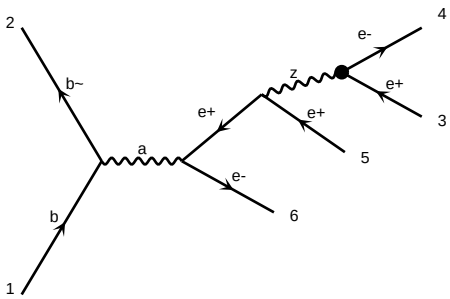

diagram 70 NP=1, NPcG=0, NPcGtil=0, NPcH=0, NPcHB=0, NPcHBtil=0, NPcHDD=0, NPcHW=0, NPcHWB=0, NPcHWtil=0, NPcHWtilB=0, NPcW=0, NPcWtil=0, NPdHB=0, NPdHW=0, NPeHB=0, NPeHW=0, NPeW=0, NPlH1=0, NPlH2=0, NPlHB=0, NPlHW=0, NPlW=0, NPuG=0, NPuH=0, NPuW=0

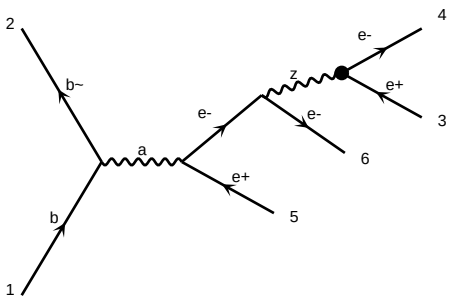

diagram 73 NP=1, NPcG=0, NPcGtil=0, NPcH=0, NPcHB=0, NPcHBtil=0, NPcHDD=0, NPcHW=0, NPcHWB=0, NPcHWtil=0, NPcHWtilB=0, NPcW=0, NPcWtil=0, NPdHB=0, NPdHW=0, NPeHB=0, NPeHW=0, NPeW=0, NPlH1=0, NPlH2=0, NPlHB=0, NPlHW=0, NPlW=0, NPuG=0, NPuH=0, NPuW=0

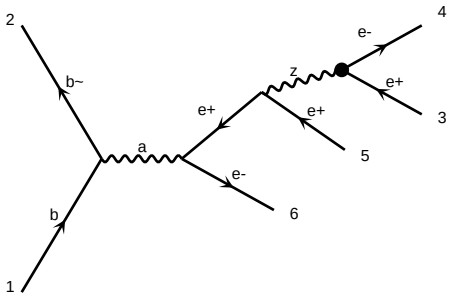

diagram 76 NP=1, NPcG=0, NPcGtil=0, NPcH=0, NPcHB=0, NPcHDD=0, NPcHW=0, NPcHWB=0, NPcW=0, NPcWtil=0, NPlq1=0, NPlq3=0, NPqe=0, NPqu1=0, NPqu8=0, NPuB=0, NPuW=0, NPuu1=0

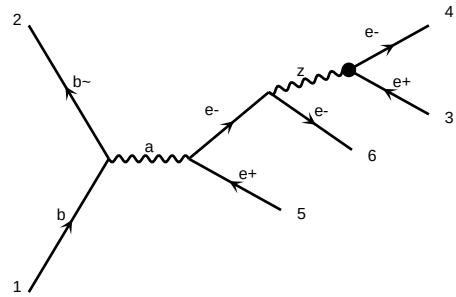

diagram 77 NP=1, NPcG=0, NPcGtil=0, NPcH=0, NPcHB=0, NPcHDD=0, NPcHW=0, NPcHWB=0, NPcW=0, NPcWtil=0, NPlq1=0, NPlq3=0, NPqe=0, NPqu1=0, NPqu8=0, NPuB=0, NPuW=0, NPuu1=0

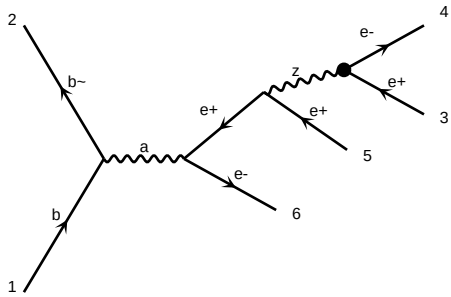

diagram 78 NP=1, NPcG=0, NPcGtil=0, NPcH=0, NPcHB=0, NPcHDD=0, NPcHW=0, NPcHWB=0, NPcW=0, NPcWtil=0, NPlq1=0, NPlq3=0, NPqe=0, NPqu1=0, NPqu8=0, NPuB=0, NPuW=0, NPuu1=0

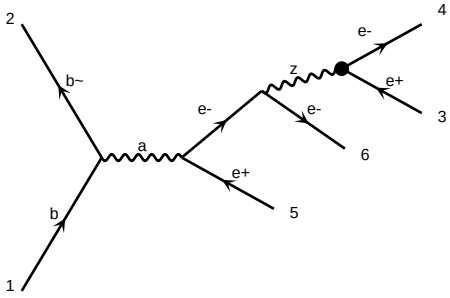

diagram 79 NP=1, NPcG=0, NPcGtil=0, NPcH=0, NPcHB=0, NPcHDD=0, NPcHW=0, NPcHWB=0, NPcW=0, NPcWtil=0, NPlq1=0, NPlq3=0, NPqe=0, NPqu1=0, NPqu8=0, NPuB=0, NPuW=0, NPuu1=0

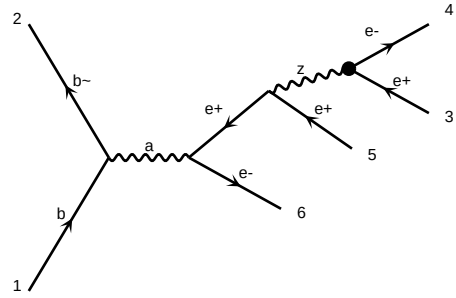

diagram 80 NP=1, NPcG=0, NPcGtil=0, NPcH=0, NPcHB=0, NPcHDD=0, NPcHW=0, NPcHWB=0, NPcW=0, NPcWtil=0, NPlq1=0, NPlq3=0, NPqe=0, NPqu1=0, NPqu8=0, NPuB=0, NPuW=0, NPuu1=0

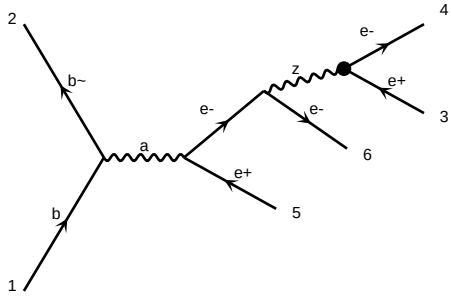

diagram 81 NP=1, NPcG=0, NPcGtil=0, NPcH=0, NPcHB=0, NPcHDD=0, NPcHW=0, NPcHWB=0, NPcW=0, NPcWtil=0, NPlq1=0, NPlq3=0, NPqe=0, NPqu1=0, NPqu8=0, NPuB=0, NPuW=0, NPuu1=0

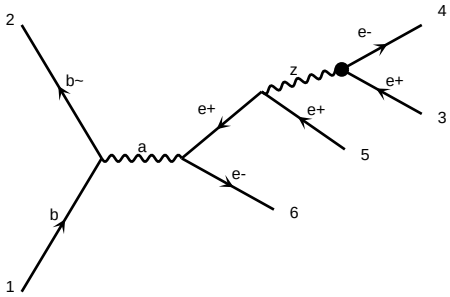

diagram 82 NP=1, NPcG=0, NPcGtil=0, NPcH=0, NPcHB=0, NPcHDD=0, NPcHW=0, NPcHWB=0, NPcW=0, NPcWtil=0, NPlq1=0, NPlq3=0, NPqe=0, NPqu1=0, NPqu8=0, NPuB=0, NPuW=0, NPuu1=0

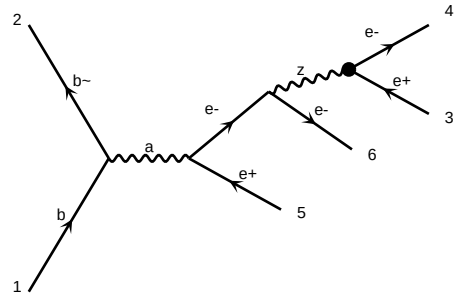

diagram 83 NP=1, NPcG=0, NPcGtil=0, NPcH=0, NPcHB=0, NPcHDD=0, NPcHW=0, NPcHWB=0, NPcW=0, NPcWtil=0, NPlq1=0, NPlq3=0, NPqe=0, NPqu1=0, NPqu8=0, NPuB=0, NPuW=0, NPuu1=0

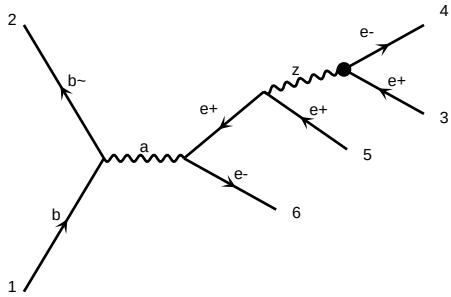

diagram 84 NP=1, NPcG=0, NPcGtil=0, NPcH=0, NPcHB=0, NPcHDD=0, NPcHW=0, NPcHWB=0, NPcW=0, NPcWtil=0, NPlq1=0, NPlq3=0, NPqe=0, NPqu1=0, NPqu8=0, NPuB=0, NPuW=0, NPuu1=0

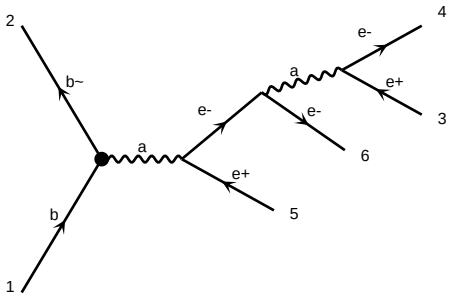

diagram 85 NP=1, NPcG=0, NPcGtil=0, NPcH=0, NPcHB=0, NPcHDD=0, NPcHW=0, NPcHWB=0, NPcW=0, NPcWtil=0, NPlq1=0, NPlq3=0, NPqe=0, NPqu1=0, NPqu8=0, NPuB=0, NPuW=0, NPuu1=0

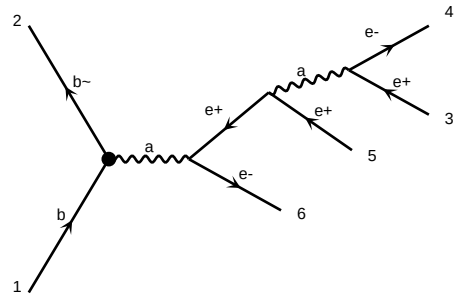

diagram 86 NP=1, NPcG=0, NPcGtil=0, NPcH=0, NPcHB=0, NPcHDD=0, NPcHW=0, NPcHWB=0, NPcW=0, NPcWtil=0, NPlq1=0, NPlq3=0, NPqe=0, NPqu1=0, NPqu8=0, NPuB=0, NPuW=0, NPuu1=0

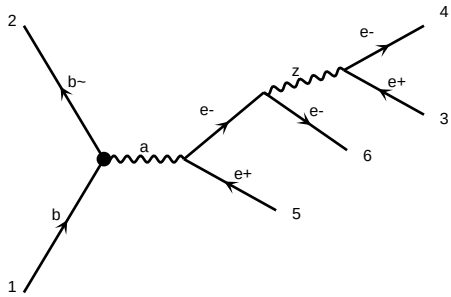

diagram 87 NP=1, NPcG=0, NPcGtil=0, NPcH=0, NPcHB=0, NPcHDD=0, NPcHW=0, NPcHWB=0, NPcW=0, NPcWtil=0, NPlq1=0, NPlq3=0, NPqe=0, NPqu1=0, NPqu8=0, NPuB=0, NPuW=0, NPuu1=0

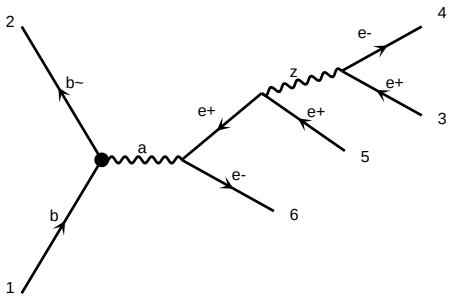

diagram 88 NP=1, NPcG=0, NPcGtil=0, NPcH=0, NPcHB=0, NPcHDD=0, NPcHW=0, NPcHWB=0, NPcW=0, NPcWtil=0, NPlq1=0, NPlq3=0, NPqe=0, NPqu1=0, NPqu8=0, NPuB=0, NPuW=0, NPuu1=0

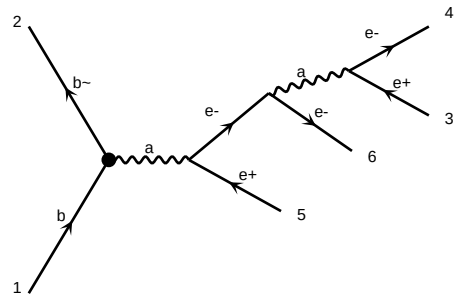

diagram 89 NP=1, NPcG=0, NPcGtil=0, NPcH=0, NPcHB=0, NPcHDD=0, NPcHW=0, NPcHWB=0, NPcW=0, NPcWtil=0, NPlq1=0, NPlq3=0, NPqe=0, NPqu1=0, NPqu8=0, NPuB=0, NPuW=0, NPuu1=0

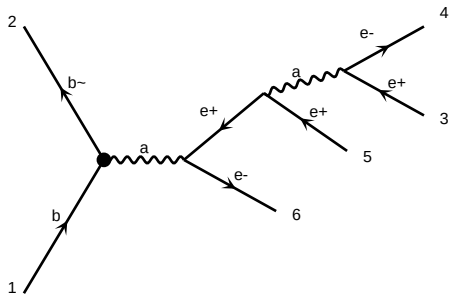

diagram 90 NP=1, NPcG=0, NPcGtil=0, NPcH=0, NPcHB=0, NPcHDD=0, NPcHW=0, NPcHWB=0, NPcW=0, NPcWtil=0, NPlq1=0, NPlq3=0, NPqe=0, NPqu1=0, NPqu8=0, NPuB=0, NPuW=0, NPuu1=0

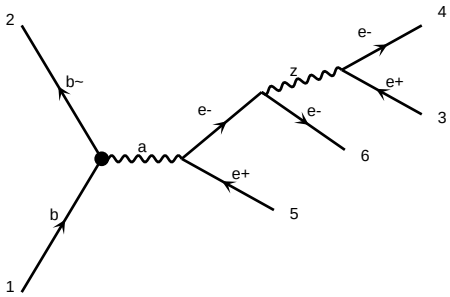

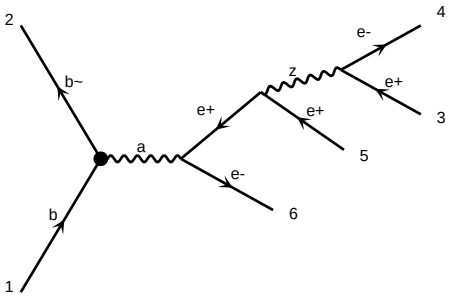

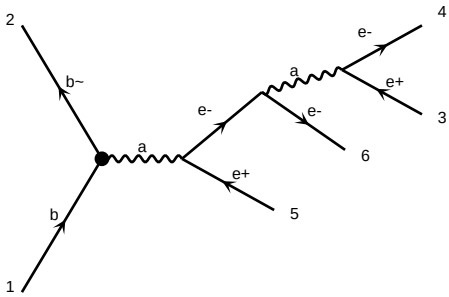

diagram 91 NP=1, NPcG=0, NPcGtil=0, NPcH=0, NPcHB=0, NPcHDD=0, NPcHW=0, NPcHWB=0, NPcW=0, NPdcHB=0, NPdcHW=0, NPeHB=0, NPeHW=0, NPlH1=0, NPlH2=0, NPlHB=0, NPlHW=0, NPlebH=0, NPlebHB=0, NPlebHW=0, NPlebW=0, NPlequ1H=0, NPlequ3H=0, NPqH=0, NPqHB=0, NPqHW=0, NPquH=0, NPquHB=0, NPquHW=0, NPuH=0, NPuHB=0, NPuHW=0, NPuW=0, NPW=0

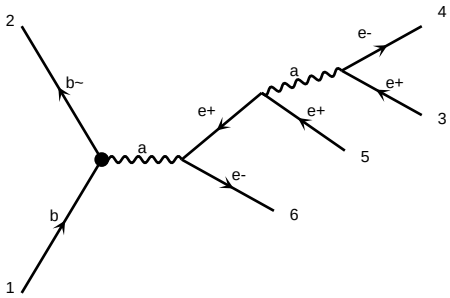

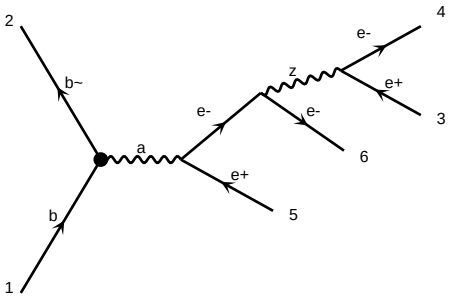

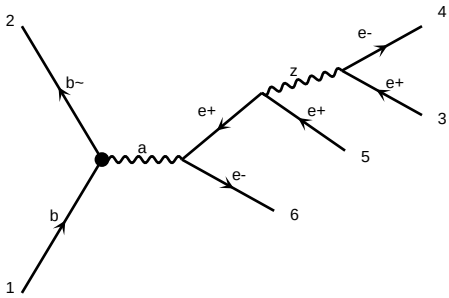

diagram 94 NP=1, NPcG=0, NPcGtil=0, NPcH=0, NPcHB=0, NPcHDD=0, NPcHW=0, NPcHWB=0, NPcW=0, NPdcHB=0, NPdcHW=0, NPeHB=0, NPeHW=0, NPlH1=0, NPlH2=0, NPlHB=0, NPlHW=0, NPlebH=0, NPlebHB=0, NPlebHW=0, NPlebW=0, NPlequ1H=0, NPlequ3H=0, NPqH=0, NPqHB=0, NPqHW=0, NPquH=0, NPquHB=0, NPquHW=0, NPuH=0, NPuHB=0, NPuHW=0, NPuW=0, NPW=0

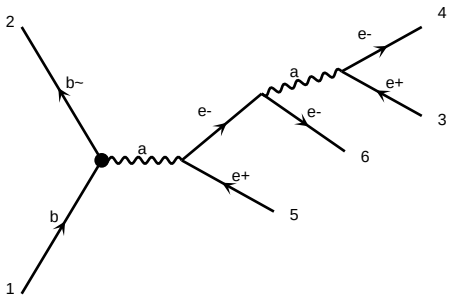

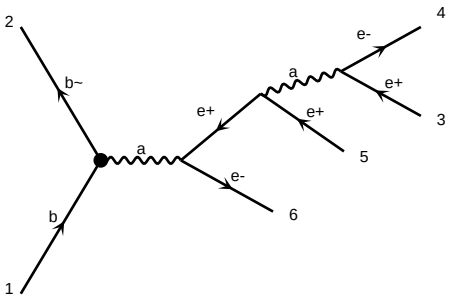

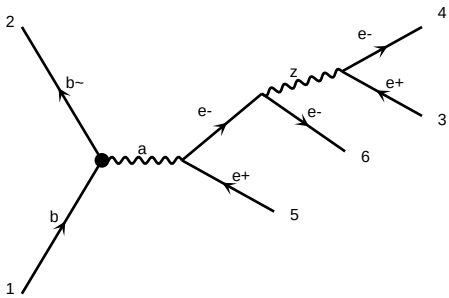

diagram 97 NP=1, NPcG=0, NPcGtil=0, NPcH=0, NPcHB=0, NPcHDD=0, NPcHW=0, NPcHWB=0, NPcW=0, NPdcHB=0, NPdcHW=0, NPeHB=0, NPeHW=0, NPlH1=0, NPlH2=0, NPlHB=0, NPlHW=0, NPlebH=0, NPlebHB=0, NPlebHW=0, NPlebW=0, NPlequ1H=0, NPlequ3H=0, NPqH=0, NPqHB=0, NPqHW=0, NPquH=0, NPquHB=0, NPquHW=0, NPuH=0, NPuHB=0, NPuHW=0, NPuW=0, NPW=0

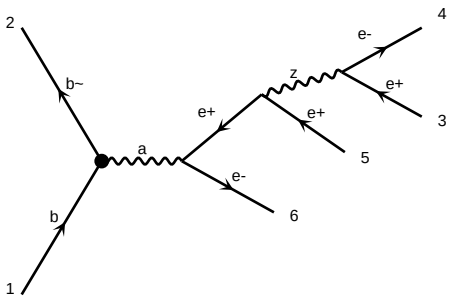

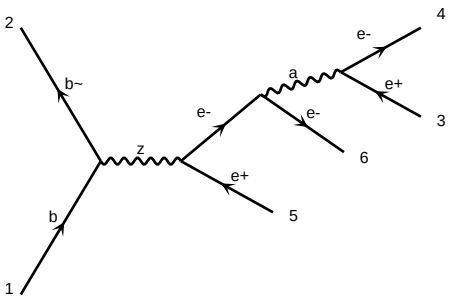

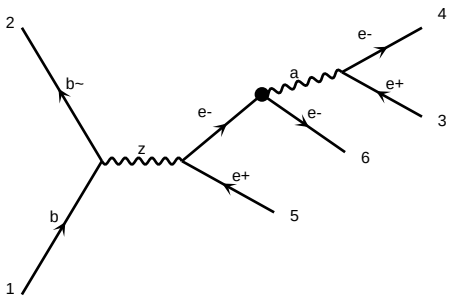

diagram 100 NP=1, NPcG=0, NPcGtil=0, NPcH=0, NPcHB=0, NPcHDD=0, NPcHW=0, NPcHWB=0, NPcW=0, NPdcHB=0, NPdcHW=0, NPeHB=0, NPeHW=0, NPlH1=0, NPlH2=0, NPlHB=0, NPlHW=0, NPlebH=0, NPlebHB=0, NPlebHW=0, NPlebW=0, NPlequ1H=0, NPlequ3H=0, NPqH=0, NPqHB=0, NPqHW=0, NPquH=0, NPquHB=0, NPquHW=0, NPuH=0, NPuHB=0, NPuHW=0, NPuW=0, NPW=0

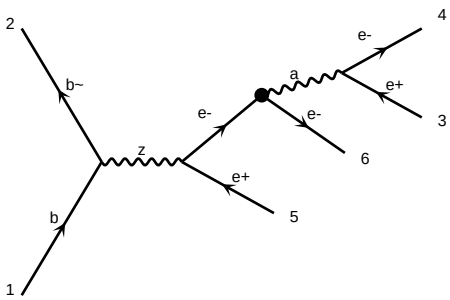

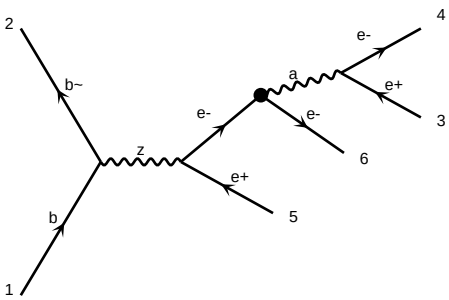

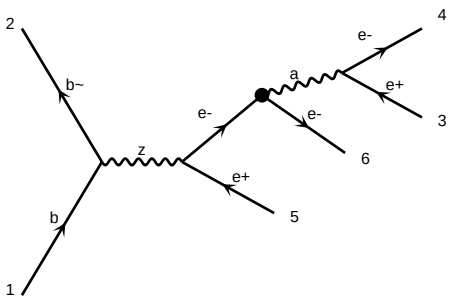

diagram 103 NP=1, NPcG=0, NPcGtil=0, NPcH=0, NPcHB=0, NPcHDD=0, NPcHW=0, NPcHWB=0, NPcW=0, NPdcHB=0, NPdcHW=0, NPeHB=0, NPeHW=0, NPlH1=0, NPlH2=0, NPlHB=0, NPlHW=0, NPlebH=0, NPlebHB=0, NPlebHW=0, NPlebW=0, NPlequ1H=0, NPlequ3H=0, NPqH=0, NPqHB=0, NPqHW=0, NPquH=0, NPquHB=0, NPquHW=0, NPuH=0, NPuHB=0, NPuHW=0, NPuW=0, NPW=0

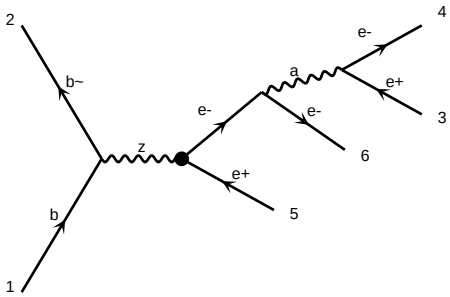

diagram 106 NP=1, NPcG=0, NPcGtil=0, NPcH=0, NPcHB=0, NPcHDD=0, NPcHW=0, NPcHWB=0, NPcW=0, NPdcHBtil=0, NPdcHW=0, NPdcHWtil=0, NPdcW=0, NPlambda=0, NPlq1=0, NPlq3=0, NPqe=0, NPqu1=0, NPqu8=0, NPuG=0, NPuH=0

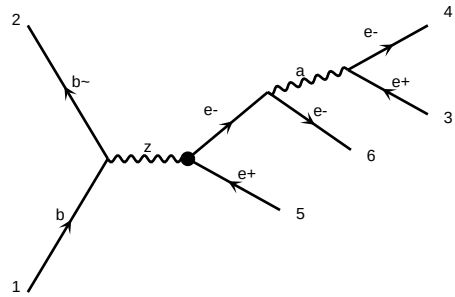

diagram 107 NP=1, NPcG=0, NPcGtil=0, NPcH=0, NPcHB=0, NPcHDD=0, NPcHW=0, NPcHWB=0, NPcW=0, NPdcHBtil=0, NPdcHW=0, NPdcHWtil=0, NPdcW=0, NPlambda=0, NPlq1=0, NPlq3=0, NPqe=0, NPqu1=0, NPqu8=0, NPuG=0, NPuH=0

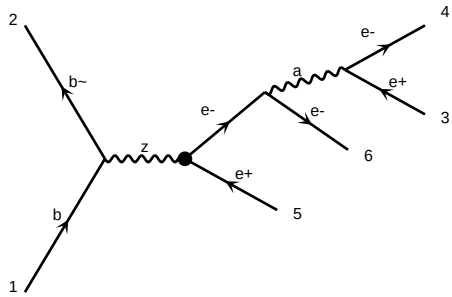

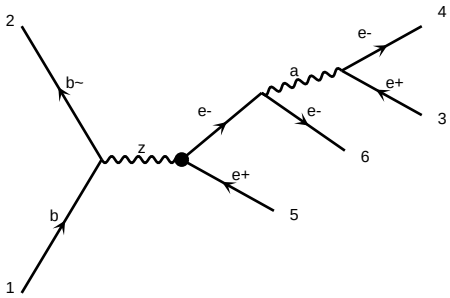

diagram 109 NP=1, NPcG=0, NPcGtil=0, NPcH=0, NPcHB=0, NPcHDD=0, NPcHW=0, NPcHWB=0, NPcW=0, NPdcHBtil=0, NPdcHW=0, NPdcHWtil=0, NPdcW=0, NPlambda=0, NPlq1=0, NPlq3=0, NPqe=0, NPqu1=0, NPqu8=0, NPuG=0, NPuH=0

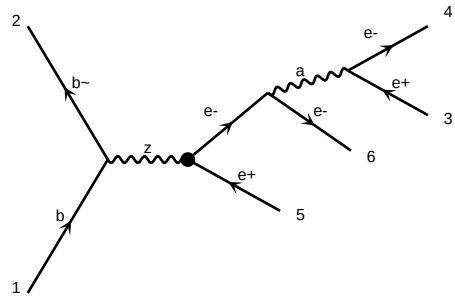

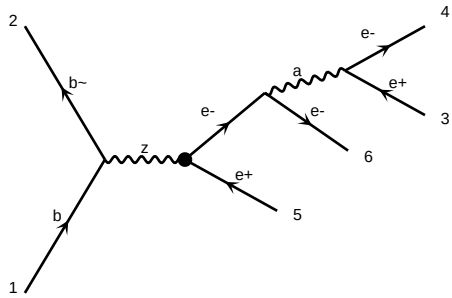

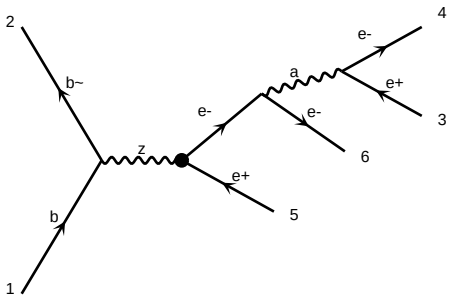

diagram 112 NP=1, NPcG=0, NPcGtil=0, NPcH=0, NPcHB=0, NPcHDD=0, NPcHW=0, NPcHWB=0, NPcW=0, NPdcHBtil=0, NPdcHW=0, NPdcHWtil=0, NPdcW=0, NPlambda=0, NPlq1=0, NPlq3=0, NPqe=0, NPqu1=0, NPqu8=0, NPuG=0, NPuH=0

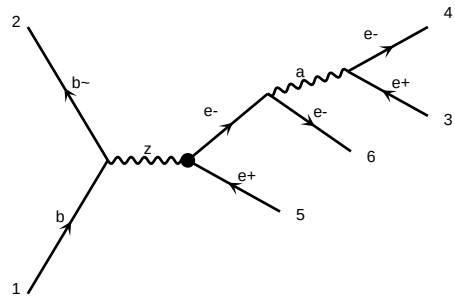

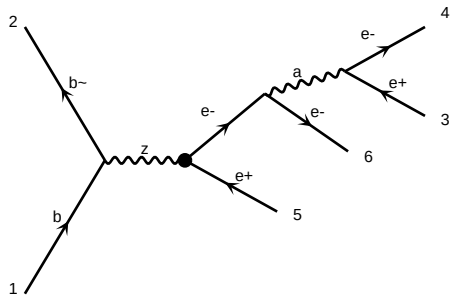

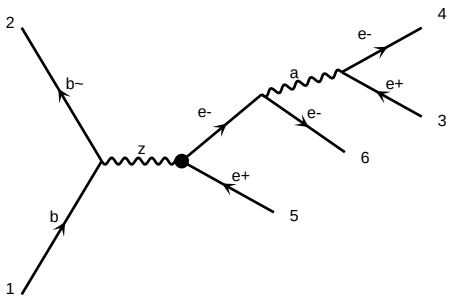

diagram 115 NP=1, NPcG=0, NPcGtil=0, NPcH=0, NPcHB=0, NPcHDD=0, NPcHW=0, NPcHWB=0, NPcW=0, NPdcHBtil=0, NPdcHW=0, NPdcHWtil=0, NPdcW=0, NPlambda=0, NPlq1=0, NPlq3=0, NPqe=0, NPqu1=0, NPqu8=0, NPuG=0, NPuH=0

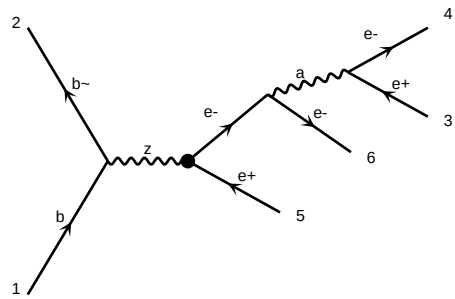

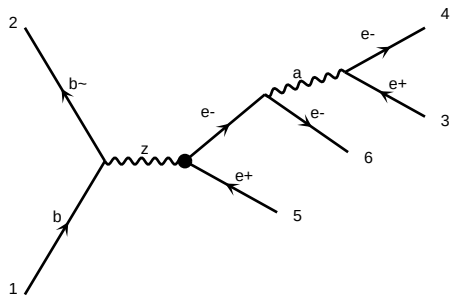

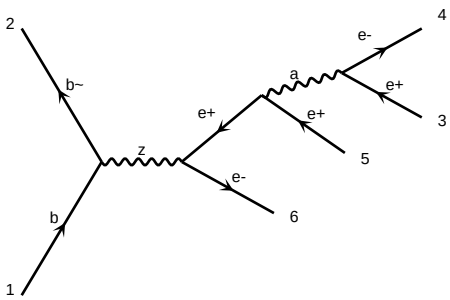

diagram 118 NP=0, NPcG=0, NPcGtil=0, NPcH=0, NPcHB=0, NPcHDD=0, NPcHW=0, NPcHWB=0, NPcW=0, NPdcHBtil=0, NPdcHW=0, NPdcHWtil=0, NPdcW=0, NPlambda=0, NPlq1=0, NPlq3=0, NPqe=0, NPqu1=0, NPqu8=0, NPuG=0, NPuH=0

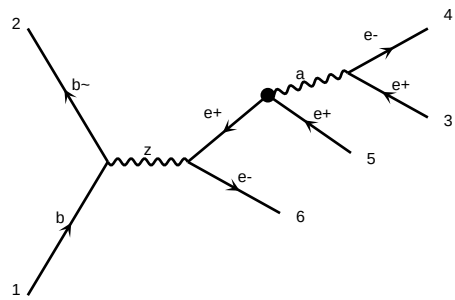

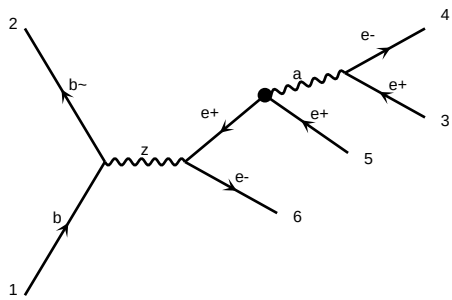

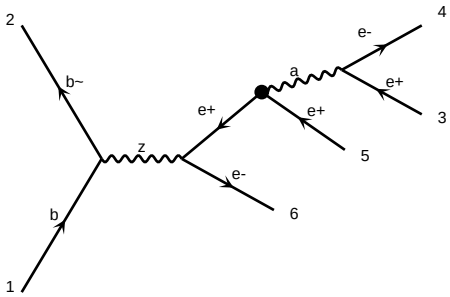

diagram 121 NP=1, NPcG=0, NPcGtil=0, NPcH=0, NPcHB=0, NPcHDD=0, NPcHW=0, NPcHWB=0, NPcW=0, NPcWtil=0, NPdeltaB=0, NPdeltaW=0, NPlamb=0, NPll1=0, NPlq1=0, NPlq3=0, NPqq1=0, NPqq3=0, NPtG=0, NPtW=0, NPuG=0, NPuW=0

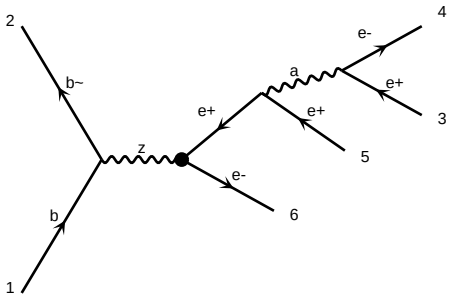

diagram 124 NP=1, NPcG=0, NPcGtil=0, NPcH=0, NPcHB=0, NPcHDD=0, NPcHW=0, NPcHWB=0, NPcW=0, NPcWtil=0, NPdeltaB=0, NPdeltaW=0, NPlamb=0, NPll1=0, NPlq1=0, NPlq3=0, NPqq1=0, NPqq3=0, NPtG=0, NPtW=0, NPuG=0, NPuW=0

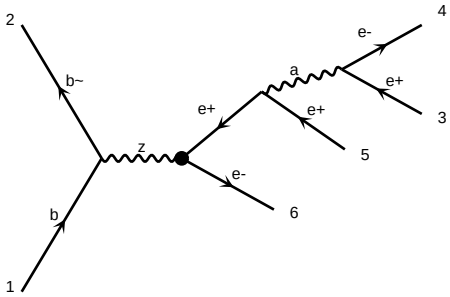

diagram 127 NP=1, NPcG=0, NPcGtil=0, NPcH=0, NPcHB=0, NPcHDD=0, NPcHW=0, NPcHWB=0, NPcW=0, NPcWtil=0, NPdeltaB=0, NPdeltaW=0, NPlamb=0, NPll1=0, NPlq1=0, NPlq3=0, NPqq1=0, NPqq3=0, NPtG=0, NPtW=0, NPuG=0, NPuW=0

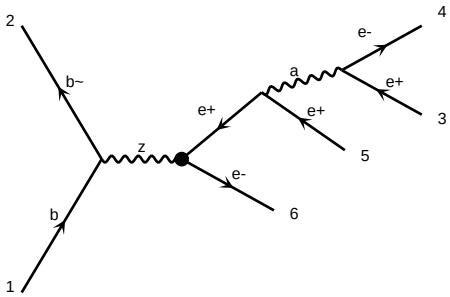

diagram 130 NP=1, NPcG=0, NPcGtil=0, NPcH=0, NPcHB=0, NPcHDD=0, NPcHW=0, NPcHWB=0, NPcW=0, NPcWtil=0, NPdeltaB=0, NPdeltaW=0, NPlamb=0, NPll1=0, NPlq1=0, NPlq3=0, NPqq1=0, NPqq3=0, NPtG=0, NPtW=0, NPuG=0, NPuW=0

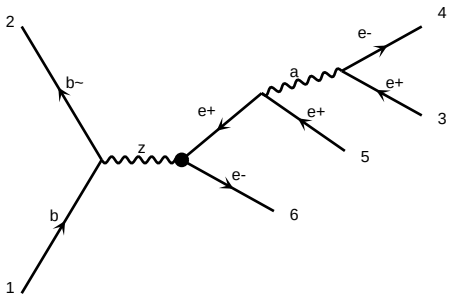

diagram 133 NP=1, NPcG=0, NPcGtil=0, NPcH=0, NPcHB=0, NPcHDD=0, NPcHW=0, NPcHWB=0, NPcW=0, NPcWtil=0, NPdeltaB=0, NPdeltaW=0, NPlamb=0, NPll1=0, NPlq1=0, NPlq3=0, NPqq1=0, NPqq3=0, NPtG=0, NPtW=0, NPuG=0, NPuW=0

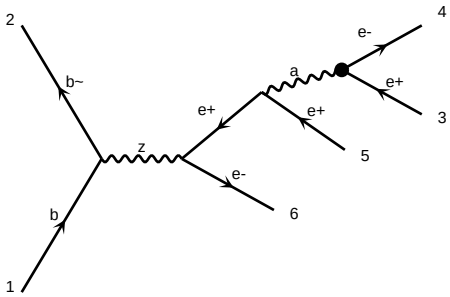

diagram 136 NP=1, NPcG=0, NPcGtil=0, NPcH=0, NPcHB=0, NPcHDD=0, NPcHW=0, NPcHWB=0, NPcW=0, NPcWtil=0, NPdB=0, NPdBtil=0, NPdG=0, NPdGtil=0, NPdW=0, NPdWtil=0, NPeB=0, NPeH=0, NPeW=0, NPlH1=0, NPlH2=0, NPlHDD=0, NPlHWB=0, NPlL1=0, NPlL2=0, NPlQ1=0, NPlQ3=0, NPlW=0, NPqB=0, NPqG=0, NPqH=0, NPqW=0, NPuB=0, NPuG=0, NPuH=0, NPuW=0

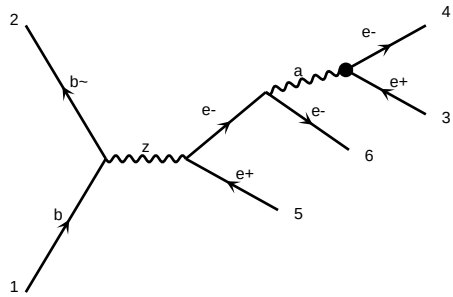

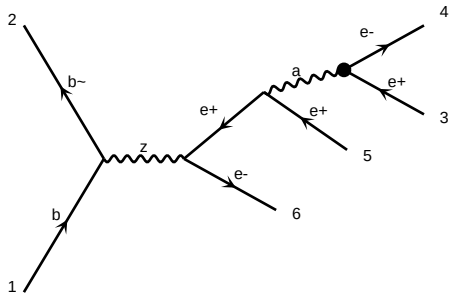

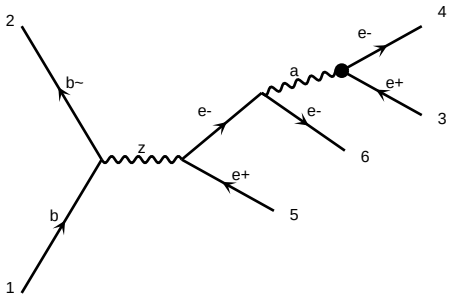

diagram 139 NP=1, NPcG=0, NPcGtil=0, NPcH=0, NPcHB=0, NPcHDD=0, NPcHW=0, NPcHWB=0, NPcW=0, NPcWtil=0, NPdB=0, NPdBtil=0, NPdG=0, NPdGtil=0, NPdW=0, NPdWtil=0, NPeB=0, NPeH=0, NPeW=0, NPlH1=0, NPlH2=0, NPlHDD=0, NPlHWB=0, NPlL1=0, NPlL2=0, NPlQ1=0, NPlQ3=0, NPlW=0, NPqB=0, NPqG=0, NPqH=0, NPqW=0, NPuB=0, NPuG=0, NPuH=0, NPuW=0

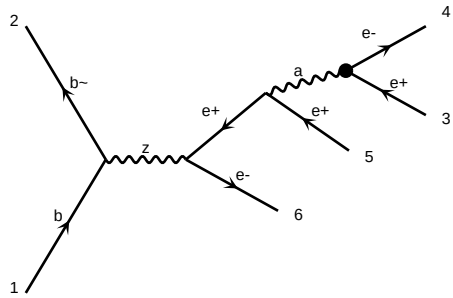

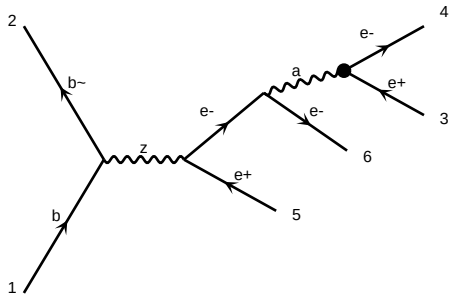

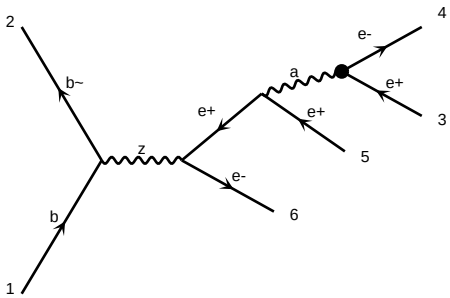

diagram 142 NP=1, NPcG=0, NPcGtil=0, NPcH=0, NPcHB=0, NPcHDD=0, NPcHW=0, NPcHWB=0, NPcW=0, NPcWtil=0, NPdB=0, NPdBtil=0, NPdG=0, NPdGtil=0, NPdW=0, NPdWtil=0, NPeB=0, NPeH=0, NPeW=0, NPlH1=0, NPlH2=0, NPlHDD=0, NPlHWB=0, NPlL1=0, NPlL2=0, NPlQ1=0, NPlQ3=0, NPlW=0, NPqB=0, NPqG=0, NPqH=0, NPqW=0, NPuB=0, NPuG=0, NPuH=0, NPuW=0

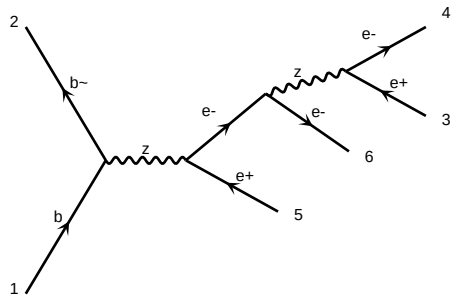

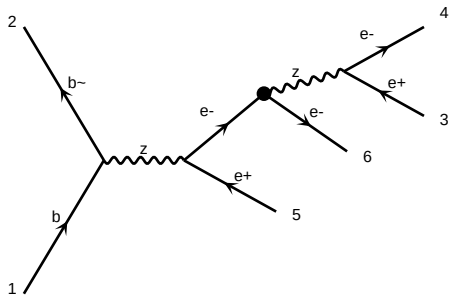

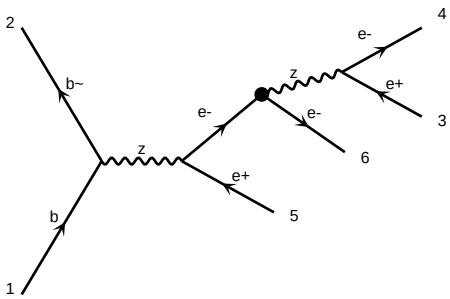

diagram 145 NP=1, NPcG=0, NPcGtil=0, NPcH=0, NPcHB=0, NPcHDD=0, NPcHW=0, NPcHWB=0, NPcW=0, NPcWtil=0, NPdB=0, NPdBtil=0, NPdG=0, NPdGtil=0, NPdW=0, NPdWtil=0, NPeB=0, NPeH=0, NPeW=0, NPlH1=0, NPlH2=0, NPlHDD=0, NPlHWB=0, NPlL1=0, NPlL2=0, NPlQ1=0, NPlQ3=0, NPlW=0, NPqB=0, NPqG=0, NPqH=0, NPqW=0, NPuB=0, NPuG=0, NPuH=0, NPuW=0

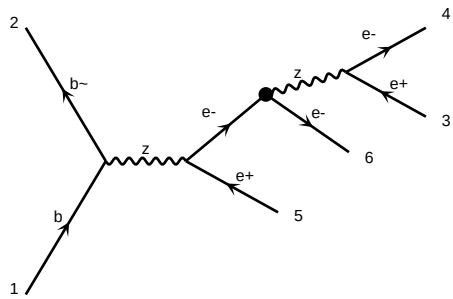

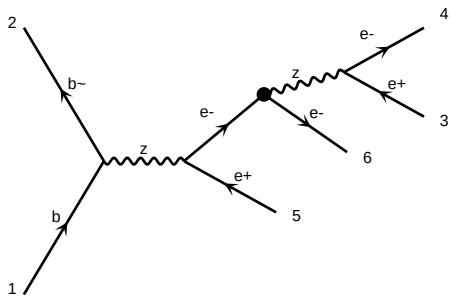

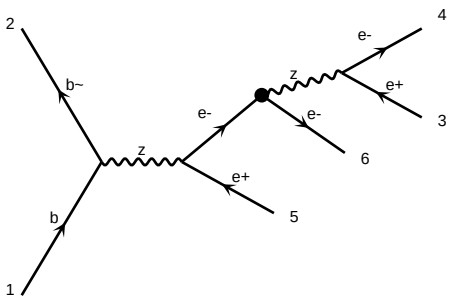

diagram 148 NP=1, NPcG=0, NPcGtil=0, NPcH=0, NPcHB=0, NPcHDD=0, NPcHW=0, NPcHWB=0, NPcW=0, NPcWtil=0, NPdB=0, NPdBtil=0, NPdG=0, NPdGtil=0, NPdW=0, NPdWtil=0, NPeB=0, NPeH=0, NPeW=0, NPlH1=0, NPlH2=0, NPlHDD=0, NPlHWB=0, NPlL1=0, NPlL2=0, NPlQ1=0, NPlQ3=0, NPlW=0, NPqB=0, NPqG=0, NPqH=0, NPqW=0, NPuB=0, NPuG=0, NPuH=0, NPuW=0

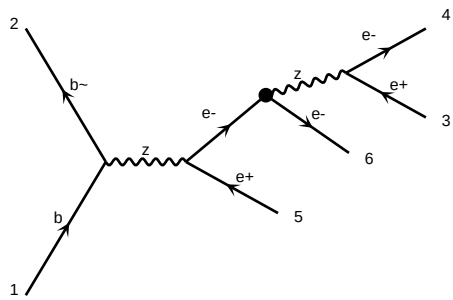

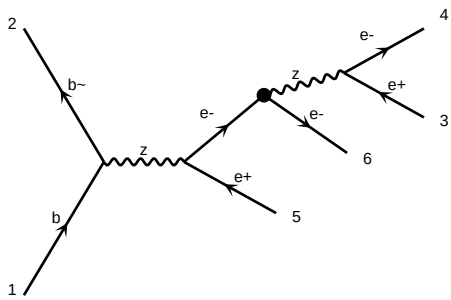

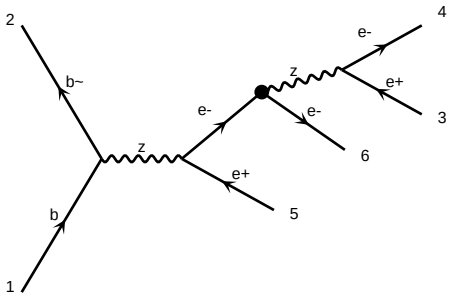

diagram 151 NP=1, NPcG=0, NPcGtil=0, NPcH=0, NPcHB=0, NPcHW=0, NPcHWB=0, NPcW=0, NPcWtil=0, NPdcHBtil=0, NPdcHWtil=0, NPeHB=0, NPeHW=0, NPeW=0, NPlH1=0, NPlH2=0, NPlHDC=0, NPlHDD=0, NPlHe=0, NPlHl=0, NPlHl3=0, NPlHq1=0, NPlHq3=0, NPlHu=0, NPlLedH=0, NPlLedHtil=0, NPlLeu=0, NPlLeu3=0, NPlLld=0, NPlLlu=0, NPlLlu3=0, NPlLqd1=0, NPlLqd3=0, NPlLqu1=0, NPlLqu3=0, NPlQd1=0, NPlQd3=0, NPlQe=0, NPlQq1=0, NPlQq3=0, NPlQu1=0, NPlQu3=0, NPlRed=0, NPlRld=0, NPlRlu=0, NPlRqd1=0, NPlRqu1=0, NPlRu=0, NPlRu3=0, NPlle=0, NPlle3=0, NPllq1=0, NPllq3=0, NPlld=0, NPlle=0, NPllu=0, NPllu3=0, NPlqd1=0, NPlqd3=0, NPlqe=0, NPlqq1=0, NPlqq3=0, NPlqu1=0, NPlqu3=0, NPlu1=0, NPlu3=0, NPqe=0, NPqq1=0, NPqq3=0, NPqu1=0, NPqu3=0, NPuu=0, NPuu3=0, NPuuu1=0, NPuuu3=0, NPwWWW=0, NPwWWWtil=0, NPwe=0, NPwl=0, NPwl3=0, NPwq1=0, NPwq3=0, NPwu=0, NPwu3=0, NPwuu1=0, NPwuu3=0, NPwud1=0, NPwud

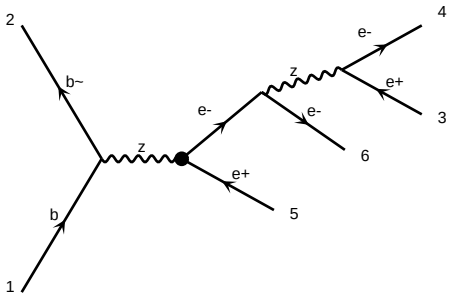

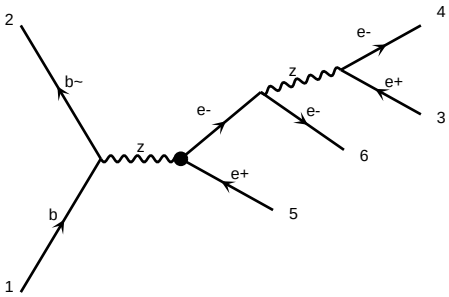

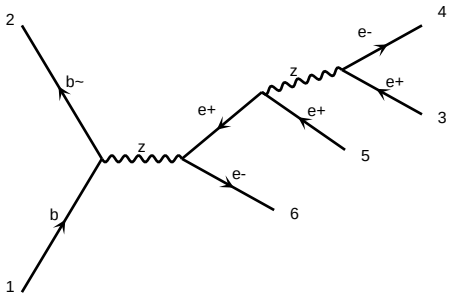

diagram 166 NP=1, NPcG=0, NPcGtil=0, NPcH=0, NPcHB=0, NPcHW=0, NPcHWB=0, NPcW=0, NPcWtil=0, NPHDD=0, NPHl1=0, NPHl3=0, NPHq1=0, NPHq3=0, NPHu=0, NPll=0, NPlq1=0, NPlq3=0, NPlu=0, NPqq1=0, NPqq3=0, NPqu=0, NPuu=0

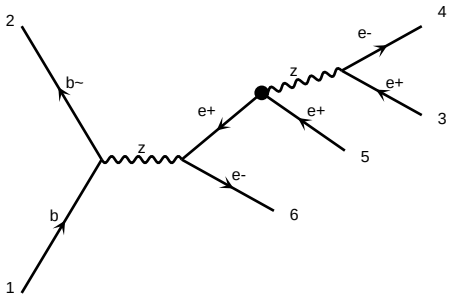

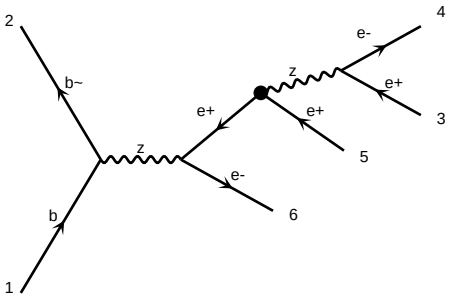

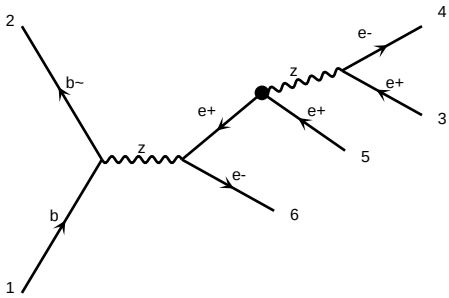

diagram 169 NP=1, NPcG=0, NPcGtil=0, NPcH=0, NPcHB=0, NPcHW=0, NPcHWB=0, NPcW=0, NPcWtil=0, NPHDD=0, NPHl1=0, NPHl3=0, NPHq1=0, NPHq3=0, NPHu=0, NPll=0, NPlq1=0, NPlq3=0, NPlu=0, NPqq1=0, NPqq3=0, NPqu=0, NPuu=0

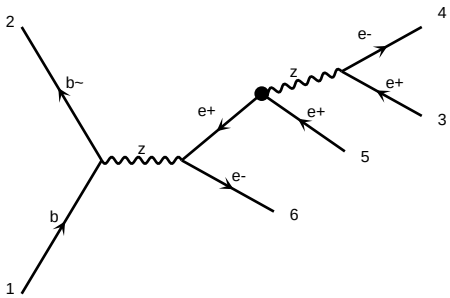

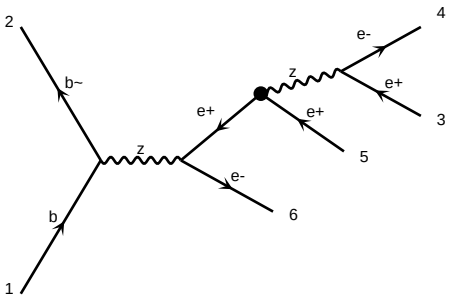

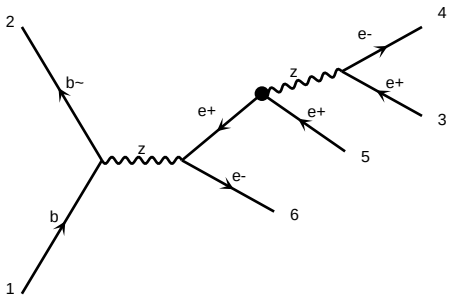

diagram 172 NP=1, NPcG=0, NPcGtil=0, NPcH=0, NPcHB=0, NPcHW=0, NPcHWB=0, NPcW=0, NPcWtil=0, NPHDD=0, NPHl1=0, NPHl3=0, NPHq1=0, NPHq3=0, NPHu=0, NPll=0, NPlq1=0, NPlq3=0, NPlu=0, NPqq1=0, NPqq3=0, NPqu=0, NPuu=0

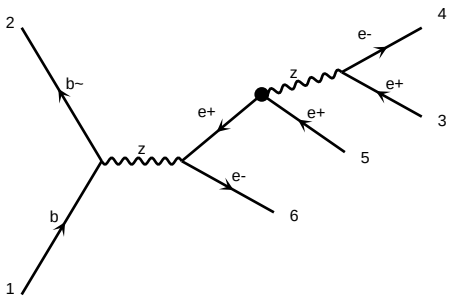

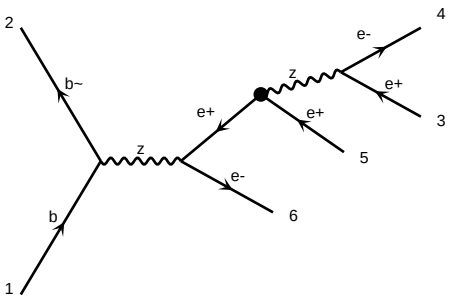

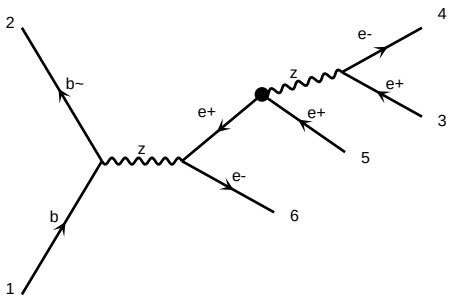

diagram 175 NP=1, NPcG=0, NPcGtil=0, NPcH=0, NPcHB=0, NPcHW=0, NPcHWB=0, NPcW=0, NPcWtil=0, NPHDD=0, NPHl1=0, NPHl3=0, NPHq1=0, NPHq3=0, NPHu=0, NPll=0, NPlq1=0, NPlq3=0, NPlu=0, NPqq1=0, NPqq3=0, NPqu=0, NPuu=0

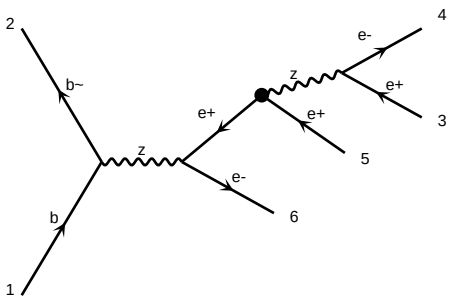

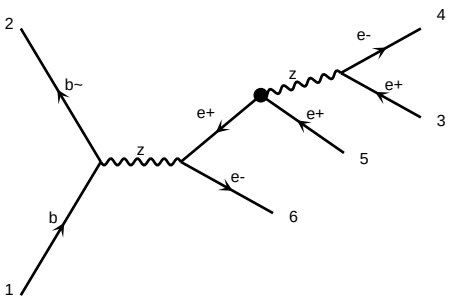

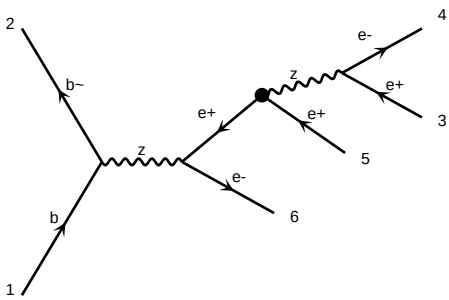

diagram 178 NP=1, NPcG=0, NPcGtil=0, NPcH=0, NPcHB=0, NPcHW=0, NPcHWB=0, NPcW=0, NPcWtil=0, NPHDD=0, NPHl1=0, NPHl3=0, NPHq1=0, NPHq3=0, NPHu=0, NPll=0, NPlq1=0, NPlq3=0, NPlu=0, NPqq1=0, NPqq3=0, NPqu=0, NPuu=0

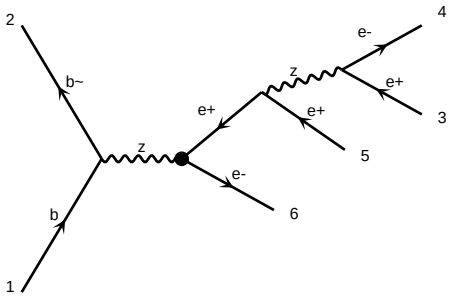

diagram 181 NP=1, NPcG=0, NPcGtil=0, NPcH=0, NPcHB=0, NPcHDD=0, NPcHW=0, NPcHWB=0, NPcW=0, NPlq1=0, NPlq3=0, NPqe=0, NPqu1=0, NPqu8=0, NPqd1=0, NPqd8=0, NPledq=0, NPlu=0, NPld=0, NPle=0, NPeu=0, NPed=0, NPll=0, NPll1

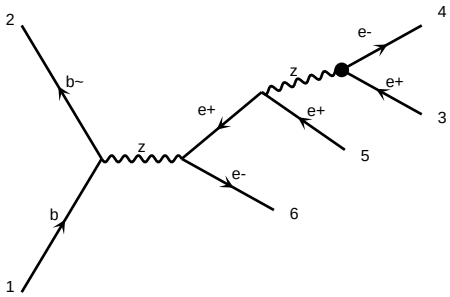

diagram 196 NP=1, NPcG=0, NPcGtil=0, NPcH=0, NPcHB=0, NPcHBtil=0, NPcHDD=0, NPcHW=0, NPcHWB=0, NPcHWtil=0, NPcHWtilB=0, NPcHl1=0, NPcHl3=0, NPcHq1=0, NPcHq3=0, NPcHu=0, NPcHud=0, NPcHWtil=0, NPcll1=0, NPcqq1=0, NPcqq11=0, NPcqq3=0, NPcqq31=0, NPcuu=0, NPcuu1=0, NPlq1=0, NPlq3=0, NPlu=0, NPld=0, NPqe=0, NPqu1=0, NPqd1=0, NPqu8=0, NPqd8=0, NPeu=0, NPed=0, QED=3, QNP=2, WEIGHTED=5

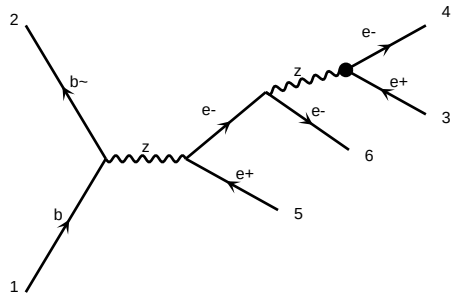

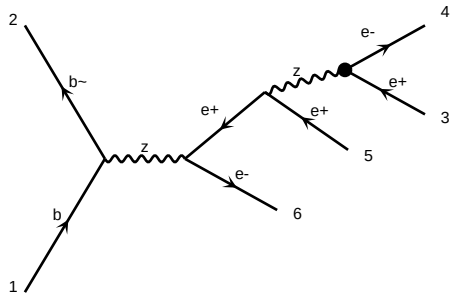

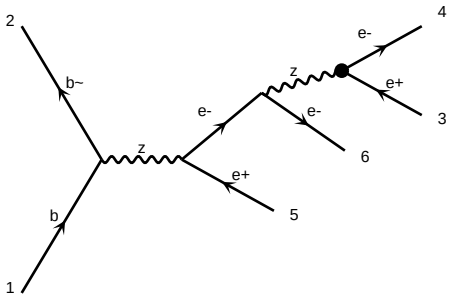

diagram 199 NP=1, NPcG=0, NPcGtil=0, NPcH=0, NPcHB=0, NPcHBtil=0, NPcHDD=0, NPcHW=0, NPcHWB=0, NPcHWtil=0, NPcHWtilB=0, NPcHl1=0, NPcHl3=0, NPcHq1=0, NPcHq3=0, NPcHu=0, NPcHud=0, NPcHWtil=0, NPcll1=0, NPcqq1=0, NPcqq11=0, NPcqq3=0, NPcqq31=0, NPcuu=0, NPcuu1=0, NPlq1=0, NPlq3=0, NPlu=0, NPld=0, NPqe=0, NPqu1=0, NPqd1=0, NPqu8=0, NPqd8=0, NPeu=0, NPed=0, QED=3, QNP=2, WEIGHTED=5

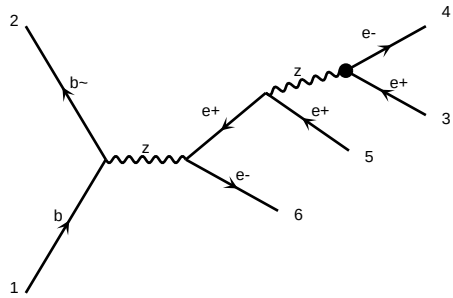

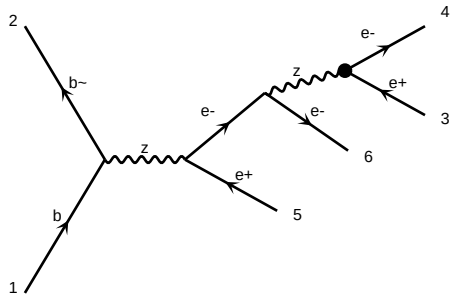

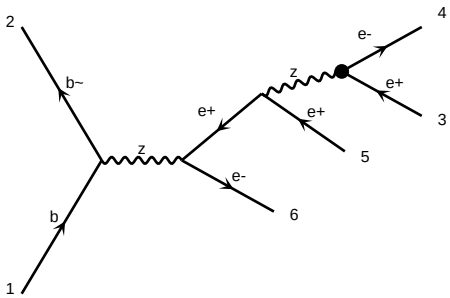

diagram 202 NP=1, NPcG=0, NPcGtil=0, NPcH=0, NPcHB=0, NPcHBtil=0, NPcHDD=0, NPcHW=0, NPcHWB=0, NPcHWtil=0, NPcHWtilB=0, NPcHl1=0, NPcHl3=0, NPcHq1=0, NPcHq3=0, NPcHu=0, NPcHud=0, NPcHWtil=0, NPcll1=0, NPcqq1=0, NPcqq11=0, NPcqq3=0, NPcqq31=0, NPcuu=0, NPcuu1=0, NPlq1=0, NPlq3=0, NPlu=0, NPld=0, NPqe=0, NPqu1=0, NPqd1=0, NPqu8=0, NPqd8=0, NPeu=0, NPed=0, QED=3, QNP=2, WEIGHTED=5

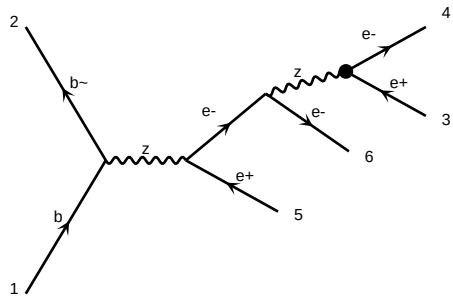

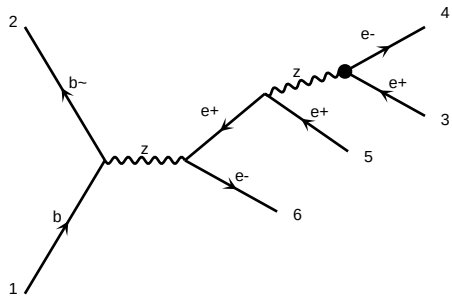

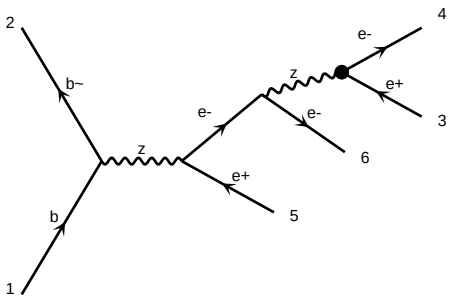

diagram 205 NP=1, NPcG=0, NPcGtil=0, NPcH=0, NPcHB=0, NPcHBtil=0, NPcHDD=0, NPcHW=0, NPcHWB=0, NPcHWtil=0, NPcHWtilB=0, NPcHl1=0, NPcHl3=0, NPcHq1=0, NPcHq3=0, NPcHu=0, NPcHud=0, NPcHWtil=0, NPcll1=0, NPcqq1=0, NPcqq11=0, NPcqq3=0, NPcqq31=0, NPcuu=0, NPcuu1=0, NPlq1=0, NPlq3=0, NPlu=0, NPld=0, NPqe=0, NPqu1=0, NPqd1=0, NPqu8=0, NPqd8=0, NPeu=0, NPed=0, QED=3, QNP=2, WEIGHTED=5

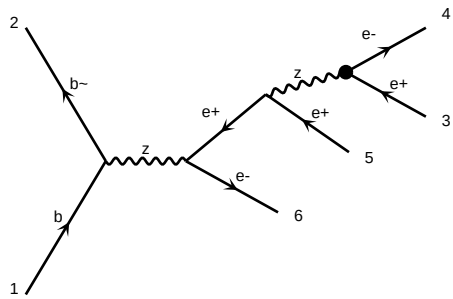

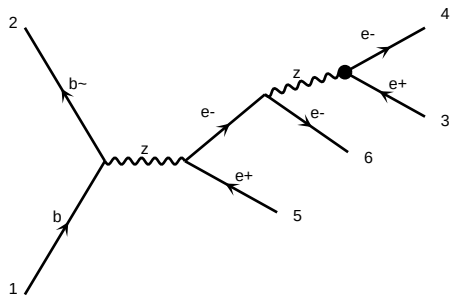

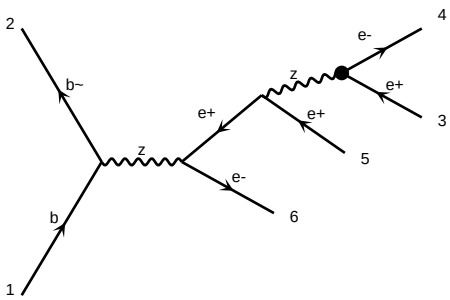

diagram 208 NP=1, NPcG=0, NPcGtil=0, NPcH=0, NPcHB=0, NPcHBtil=0, NPcHDD=0, NPcHW=0, NPcHWB=0, NPcHWtil=0, NPcHWtilB=0, NPcHl1=0, NPcHl3=0, NPcHq1=0, NPcHq3=0, NPcHu=0, NPcHud=0, NPcHWtil=0, NPcll1=0, NPcqq1=0, NPcqq11=0, NPcqq3=0, NPcqq31=0, NPcuu=0, NPcuu1=0, NPlq1=0, NPlq3=0, NPlu=0, NPld=0, NPqe=0, NPqu1=0, NPqd1=0, NPqu8=0, NPqd8=0, NPeu=0, NPed=0, QED=3, QNP=2, WEIGHTED=5

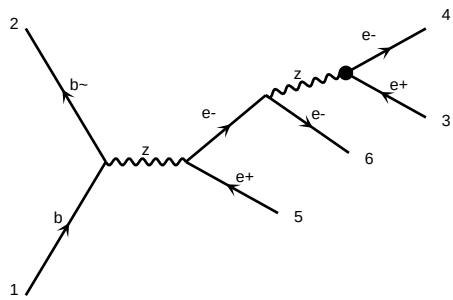

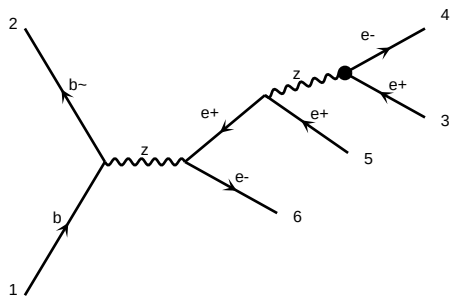

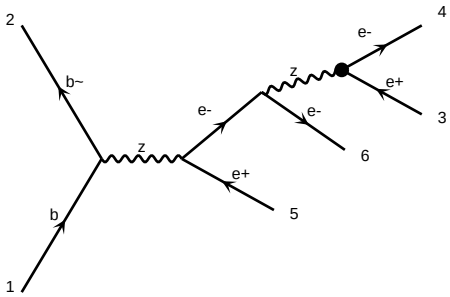

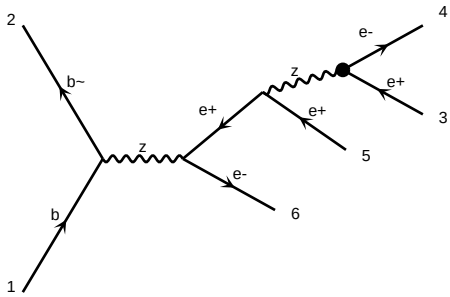

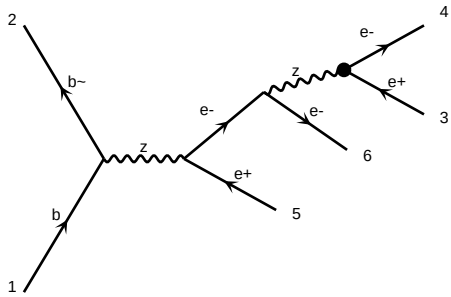

diagram 211 NP=1, NPcG=0, NPcGtil=0, NPcH=0, NPcHB=0, NPcHDD=1,NPcHW=0,NPcHWB=0,NPcW=0,NPcWWW=0,NPcWWWtil=0,NPeeWB=0,NPeeWW=0,NPeeZB=0,NPeeZZ=0,NPlebWB=0,NPlebZB=0,NPlebZZ=0,NPlqbWB=0,NPlqbWW=0,NPlqbZB=0,NPlqbZZ=0,NPlqtWB=0,NPlqtWW=0,NPlqtZB=0,NPlqtZZ=0,NPluWB=0,NPluWW=0,NPluZB=0,NPluZZ=0,NPqbWB=0,NPqbWW=0,NPqbZB=0,NPqbZZ=0,NPqtWB=0,NPqtWW=0,NPqtZB=0,NPqtZZ=0,NPquWB=0,NPquWW=0,NPquZB=0,NPquZZ=0,NPtWB=0,NPtWW=0,NPtZB=0,NPtZZ=0,NPuWB=0,NPuWW=0,NPuZB=0,NPuZZ=0 Graph: 1,2

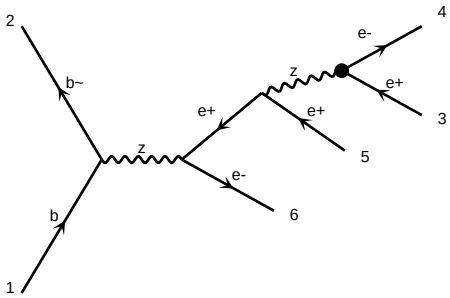

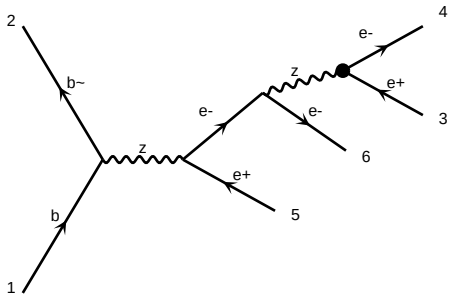

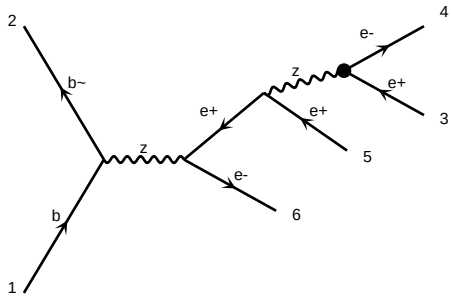

diagram 214 NP=1, NPcG=0, NPcGtil=0, NPcH=0, NPcHB=0, NPcHDD=2,NPcHW=0,NPcHWB=0,NPcW=0,NPcWWW=0,NPcWWWtil=0,NPeeWB=0,NPeeWW=0,NPeeZB=0,NPeeZZ=0,NPlebWB=0,NPlebZB=0,NPlebZZ=0,NPlqbWB=0,NPlqbWW=0,NPlqbZB=0,NPlqbZZ=0,NPlqtWB=0,NPlqtWW=0,NPlqtZB=0,NPlqtZZ=0,NPluWB=0,NPluWW=0,NPluZB=0,NPluZZ=0,NPqbWB=0,NPqbWW=0,NPqbZB=0,NPqbZZ=0,NPqtWB=0,NPqtWW=0,NPqtZB=0,NPqtZZ=0,NPquWB=0,NPquWW=0,NPquZB=0,NPquZZ=0,NPtWB=0,NPtWW=0,NPtZB=0,NPtZZ=0,NPuWB=0,NPuWW=0,NPuZB=0,NPuZZ=0 Graph: 1,2

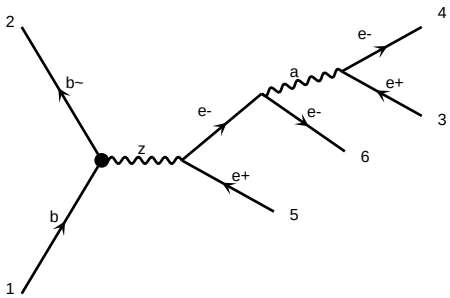

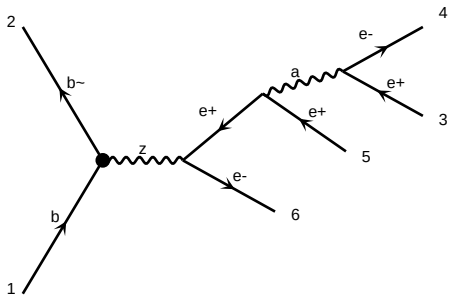

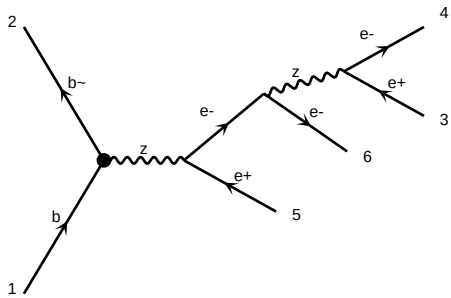

diagram 217 NP=1, NPcG=0, NPcGtil=0, NPcH=0, NPcHB=0, NPcHDD=3,NPcHW=0,NPcHWB=0,NPcW=0,NPcWWW=0,NPcWWWtil=0,NPeeWB=0,NPeeWW=0,NPeeZB=0,NPeeZZ=0,NPlebWB=0,NPlebZB=0,NPlebZZ=0,NPlqbWB=0,NPlqbWW=0,NPlqbZB=0,NPlqbZZ=0,NPlqtWB=0,NPlqtWW=0,NPlqtZB=0,NPlqtZZ=0,NPluWB=0,NPluWW=0,NPluZB=0,NPluZZ=0,NPqbWB=0,NPqbWW=0,NPqbZB=0,NPqbZZ=0,NPqtWB=0,NPqtWW=0,NPqtZB=0,NPqtZZ=0,NPquWB=0,NPquWW=0,NPquZB=0,NPquZZ=0,NPtWB=0,NPtWW=0,NPtZB=0,NPtZZ=0,NPuWB=0,NPuWW=0,NPuZB=0,NPuZZ=0 Graph: 1,2

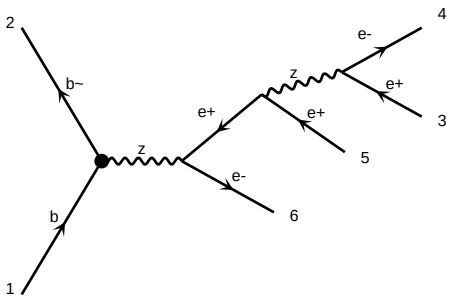

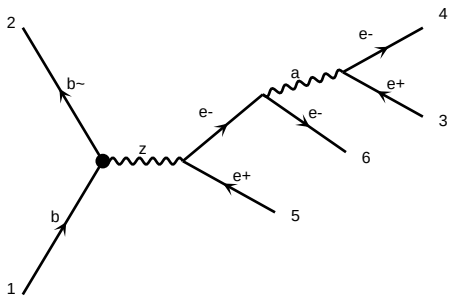

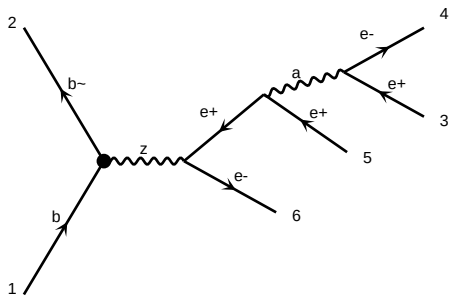

diagram 220 NP=1, NPcG=0, NPcGtil=0, NPcH=0, NPcHB=0, NPcHDD=4,NPcHW=0,NPcHWB=0,NPcW=0,NPcWWW=0,NPcWWWtil=0,NPeeWB=0,NPeeWW=0,NPeeZB=0,NPeeZZ=0,NPlebWB=0,NPlebZB=0,NPlebZZ=0,NPlqbWB=0,NPlqbWW=0,NPlqbZB=0,NPlqbZZ=0,NPlqtWB=0,NPlqtWW=0,NPlqtZB=0,NPlqtZZ=0,NPluWB=0,NPluWW=0,NPluZB=0,NPluZZ=0,NPqbWB=0,NPqbWW=0,NPqbZB=0,NPqbZZ=0,NPqtWB=0,NPqtWW=0,NPqtZB=0,NPqtZZ=0,NPquWB=0,NPquWW=0,NPquZB=0,NPquZZ=0,NPtWB=0,NPtWW=0,NPtZB=0,NPtZZ=0,NPuWB=0,NPuWW=0,NPuZB=0,NPuZZ=0 Graph: 1,2

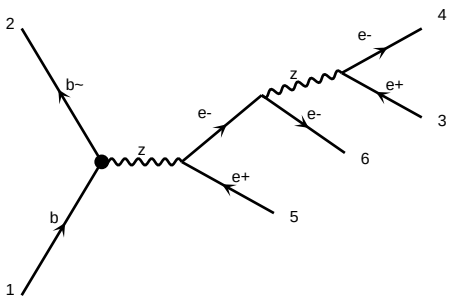

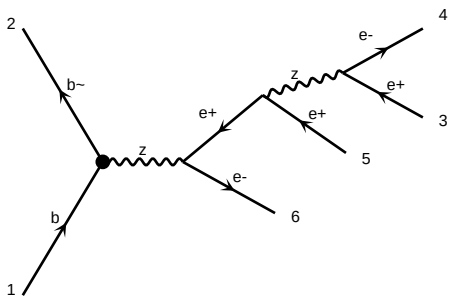

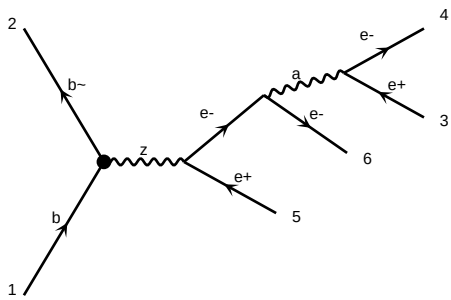

diagram 223 NP=1, NPcG=0, NPcGtil=0, NPcH=0, NPcHB=0, NPcHDD=5,NPcHW=0,NPcHWB=0,NPcW=0,NPcWWW=0,NPcWWWtil=0,NPeeWB=0,NPeeWW=0,NPeeZB=0,NPeeZZ=0,NPlebWB=0,NPlebZB=0,NPlebZZ=0,NPlqbWB=0,NPlqbWW=0,NPlqbZB=0,NPlqbZZ=0,NPlqtWB=0,NPlqtWW=0,NPlqtZB=0,NPlqtZZ=0,NPluWB=0,NPluWW=0,NPluZB=0,NPluZZ=0,NPqbWB=0,NPqbWW=0,NPqbZB=0,NPqbZZ=0,NPqtWB=0,NPqtWW=0,NPqtZB=0,NPqtZZ=0,NPquWB=0,NPquWW=0,NPquZB=0,NPquZZ=0,NPtWB=0,NPtWW=0,NPtZB=0,NPtZZ=0,NPuWB=0,NPuWW=0,NPuZB=0,NPuZZ=0 Graph: 1,2

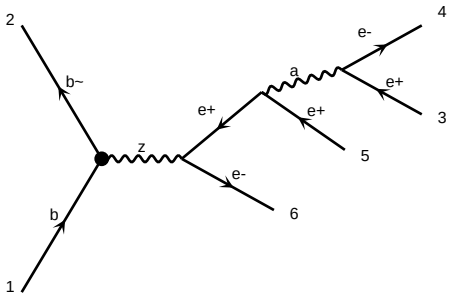

diagram 226 NP=1, NPcG=0, NPcGtil=0, NPcH=0, NPcHB=0, NPcHW=0, NPcHWB=0, NPcW=0, NPcWtil=0, NPlq1=0, NPlq3=0, NPlu=0, NPqe=0, NPqu1=0, NPqu8=0, NPquqd1=0, NPquqd8=0, NPtHW=0, NPtW=0, NPuG=0, NPuH=0, NPuW=0

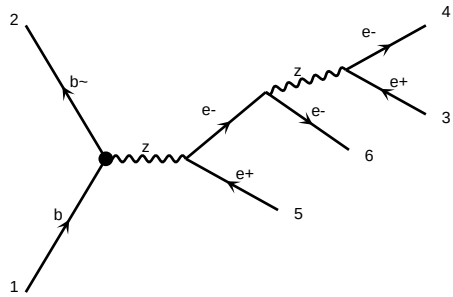

diagram 227 NP=1, NPcG=0, NPcGtil=0, NPcH=0, NPcHB=0, NPcHW=0, NPcHWB=0, NPcW=0, NPcWtil=0, NPlq1=0, NPlq3=0, NPlu=0, NPqe=0, NPqu1=0, NPqu8=0, NPquqd1=0, NPquqd8=0, NPtHW=0, NPtW=0, NPuG=0, NPuH=0, NPuW=0

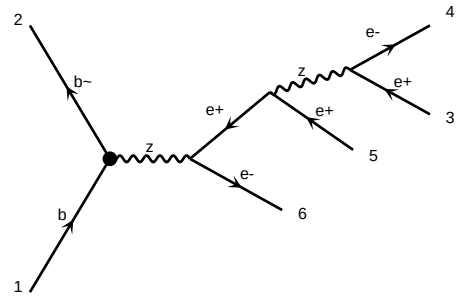

diagram 228 NP=1, NPcG=0, NPcGtil=0, NPcH=0, NPcHB=0, NPcHW=0, NPcHWB=0, NPcW=0, NPcWtil=0, NPlq1=0, NPlq3=0, NPlu=0, NPqe=0, NPqu1=0, NPqu8=0, NPquqd1=0, NPquqd8=0, NPtHW=0, NPtW=0, NPuG=0, NPuH=0, NPuW=0

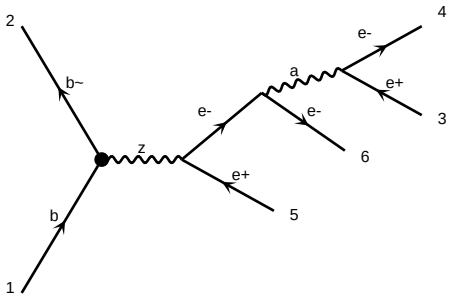

diagram 229 NP=1, NPcG=0, NPcGtil=0, NPcH=0, NPcHB=0, NPcHW=0, NPcHWB=0, NPcW=0, NPcWtil=0, NPlq1=0, NPlq3=0, NPlu=0, NPqe=0, NPqu1=0, NPqu8=0, NPquqd1=0, NPquqd8=0, NPtHW=0, NPtW=0, NPuG=0, NPuH=0, NPuW=0

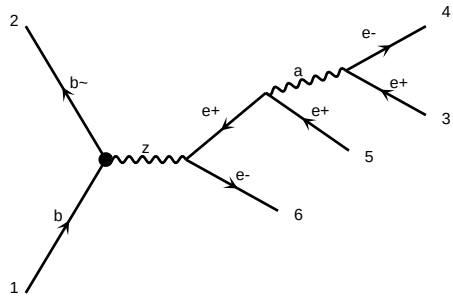

diagram 230 NP=1, NPcG=0, NPcGtil=0, NPcH=0, NPcHB=0, NPcHW=0, NPcHWB=0, NPcW=0, NPcWtil=0, NPlq1=0, NPlq3=0, NPlu=0, NPqe=0, NPqu1=0, NPqu8=0, NPquqd1=0, NPquqd8=0, NPtHW=0, NPtW=0, NPuG=0, NPuH=0, NPuW=0

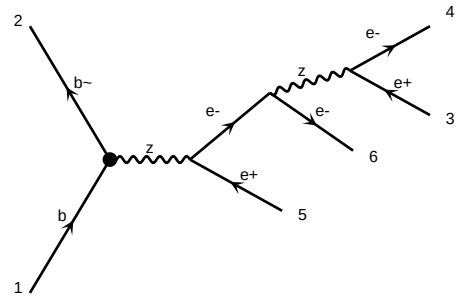

diagram 231 NP=1, NPcG=0, NPcGtil=0, NPcH=0, NPcHB=0, NPcHW=0, NPcHWB=0, NPcW=0, NPcWtil=0, NPlq1=0, NPlq3=0, NPlu=0, NPqe=0, NPqu1=0, NPqu8=0, NPquqd1=0, NPquqd8=0, NPtHW=0, NPtW=0, NPuG=0, NPuH=0, NPuW=0

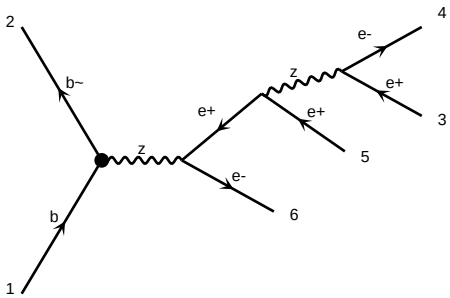

diagram 232 NP=1, NPcG=0, NPcGtil=0, NPcH=0, NPcHB=0, NPcHW=0, NPcHWB=0, NPcW=0, NPcWtil=0, NPlq1=0, NPlq3=0, NPlu=0, NPqe=0, NPqu1=0, NPqu8=0, NPquqd1=0, NPquqd8=0, NPtHW=0, NPtW=0, NPuG=0, NPuH=0, NPuW=0

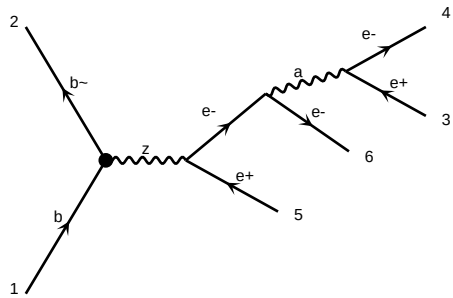

diagram 233 NP=1, NPcG=0, NPcGtil=0, NPcH=0, NPcHB=0, NPcHW=0, NPcHWB=0, NPcW=0, NPcWtil=0, NPlq1=0, NPlq3=0, NPlu=0, NPqe=0, NPqu1=0, NPqu8=0, NPquqd1=0, NPquqd8=0, NPtHW=0, NPtW=0, NPuG=0, NPuH=0, NPuW=0

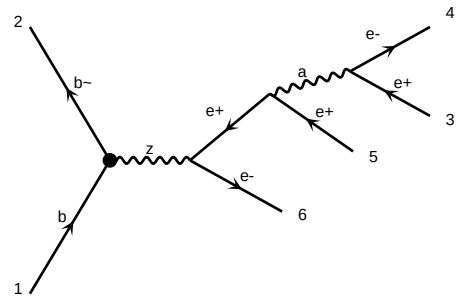

diagram 234 NP=1, NPcG=0, NPcGtil=0, NPcH=0, NPcHB=0, NPcHW=0, NPcHWB=0, NPcW=0, NPcWtil=0, NPlq1=0, NPlq3=0, NPlu=0, NPqe=0, NPqu1=0, NPqu8=0, NPquqd1=0, NPquqd8=0, NPtHW=0, NPtW=0, NPuG=0, NPuH=0, NPuW=0

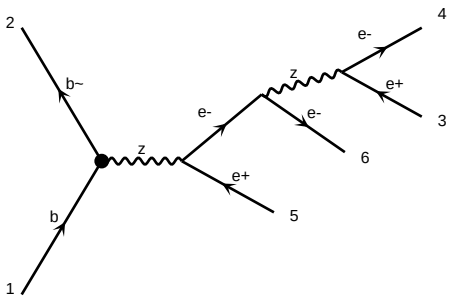

diagram 235 NP=1, NPcG=0, NPcGtil=0, NPcH=0, NPcHB=0, NPcHW=0, NPcHWB=0, NPcW=0, NPcWtil=0, NPlq1=0, NPlq3=0, NPlu=0, NPqe=0, NPqu1=0, NPqu8=0, NPquqd1=0, NPquqd8=0, NPtHW=0, NPtW=0, NPuG=0, NPuH=0, NPuW=0

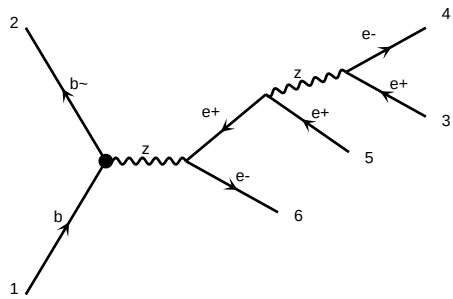

diagram 236 NP=1, NPcG=0, NPcGtil=0, NPcH=0, NPcHB=0, NPcHW=0, NPcHWB=0, NPcW=0, NPcWtil=0, NPlq1=0, NPlq3=0, NPlu=0, NPqe=0, NPqu1=0, NPqu8=0, NPquqd1=0, NPquqd8=0, NPtHW=0, NPtW=0, NPuG=0, NPuH=0, NPuW=0

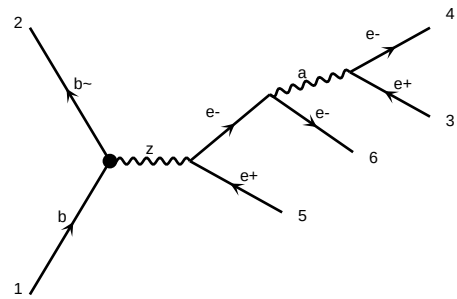

diagram 237 NP=1, NPcG=0, NPcGtil=0, NPcH=0, NPcHB=0, NPcHW=0, NPcHWB=0, NPcW=0, NPcWtil=0, NPlq1=0, NPlq3=0, NPlu=0, NPqe=0, NPqu1=0, NPqu8=0, NPquqd1=0, NPquqd8=0, NPtHW=0, NPtW=0, NPuG=0, NPuH=0, NPuW=0

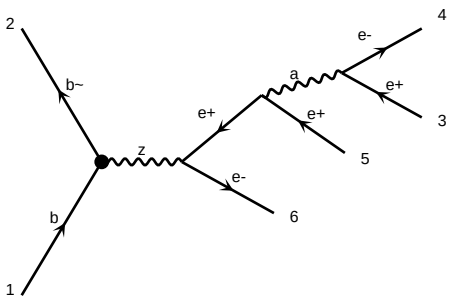

diagram 238 NP=1, NPcG=0, NPcGtil=0, NPcH=0, NPcHB=0, NPcHW=0, NPcHWB=0, NPcW=0, NPcWtil=0, NPlq1=0, NPlq3=0, NPlu=0, NPqe=0, NPqu1=0, NPqu8=0, NPquqd1=0, NPquqd8=0, NPtHW=0, NPtW=0, NPuG=0, NPuH=0, NPuW=0

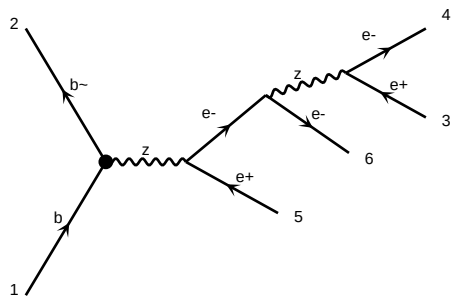

diagram 239 NP=1, NPcG=0, NPcGtil=0, NPcH=0, NPcHB=0, NPcHW=0, NPcHWB=0, NPcW=0, NPcWtil=0, NPlq1=0, NPlq3=0, NPlu=0, NPqe=0, NPqu1=0, NPqu8=0, NPquqd1=0, NPquqd8=0, NPtHW=0, NPtW=0, NPuG=0, NPuH=0, NPuW=0

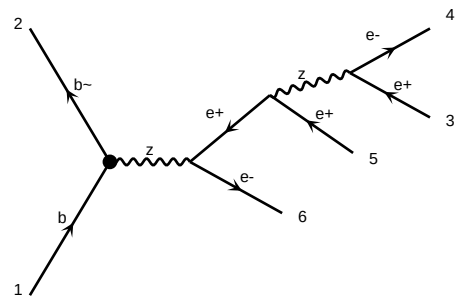

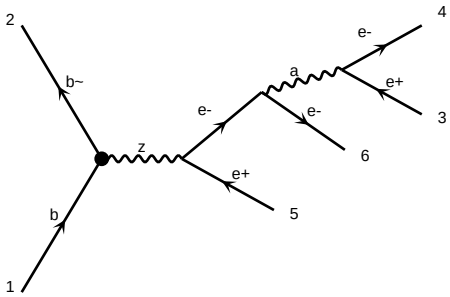

diagram 241 NP=1, NPcG=0, NPcGtil=0, NPcH=0, NPcHB=0, NPcHDD=0, NPcHW=0, NPcHWB=0, NPcW=0, NPdcHB=0, NPdcHW=0, NPeHB=0, NPeW=0, NPlH1=0, NPlH2=0, NPlHB=0, NPlHW=0, NPlebH=0, NPledH=0, NPleuH=0, NPlqd1=0, NPlqd8=0, NPlqu1=0, NPlqu8=0, NPqd1=0, NPqd8=0, NPqe=0, NPqu1=0, NPqu8=0, NPquqd1=0, NPquqd8=0, NPud1=0, NPud8=0, NPuu=0

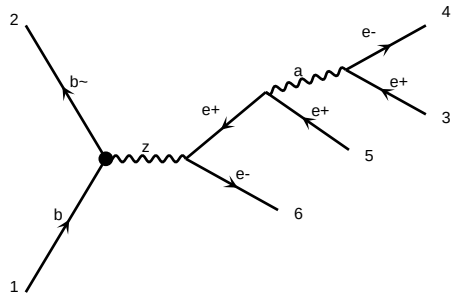

diagram 242 NP=1, NPcG=0, NPcGtil=0, NPcH=0, NPcHB=0, NPcHDD=0, NPcHW=0, NPcHWB=0, NPcW=0, NPdcHB=0, NPdcHW=0, NPeHB=0, NPeW=0, NPlH1=0, NPlH2=0, NPlHB=0, NPlHW=0, NPlebH=0, NPledH=0, NPleuH=0, NPlqd1=0, NPlqd8=0, NPlqu1=0, NPlqu8=0, NPqd1=0, NPqd8=0, NPqe=0, NPqu1=0, NPqu8=0, NPquqd1=0, NPquqd8=0, NPud1=0, NPud8=0, NPuu=0

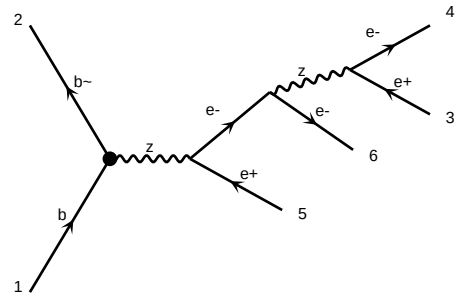

diagram 243 NP=1, NPcG=0, NPcGtil=0, NPcH=0, NPcHB=0, NPcHDD=0, NPcHW=0, NPcHWB=0, NPcW=0, NPdcHB=0, NPdcHW=0, NPeHB=0, NPeW=0, NPlH1=0, NPlH2=0, NPlHB=0, NPlHW=0, NPlebH=0, NPledH=0, NPleuH=0, NPlqd1=0, NPlqd8=0, NPlqu1=0, NPlqu8=0, NPqd1=0, NPqd8=0, NPqe=0, NPqu1=0, NPqu8=0, NPquqd1=0, NPquqd8=0, NPud1=0, NPud8=0, NPuu=0

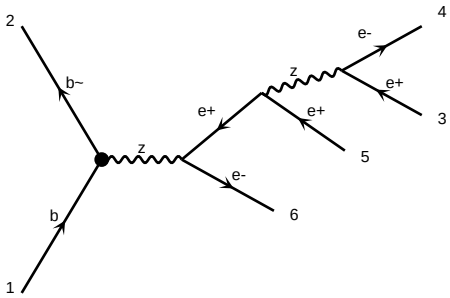

diagram 244 NP=1, NPcG=0, NPcGtil=0, NPcH=0, NPcHB=0, NPcHDD=0, NPcHW=0, NPcHWB=0, NPcW=0, NPdcHB=0, NPdcHW=0, NPeHB=0, NPeW=0, NPlH1=0, NPlH2=0, NPlHB=0, NPlHW=0, NPlebH=0, NPledH=0, NPleuH=0, NPlqd1=0, NPlqd8=0, NPlqu1=0, NPlqu8=0, NPqd1=0, NPqd8=0, NPqe=0, NPqu1=0, NPqu8=0, NPquqd1=0, NPquqd8=0, NPud1=0, NPud8=0, NPuu=0

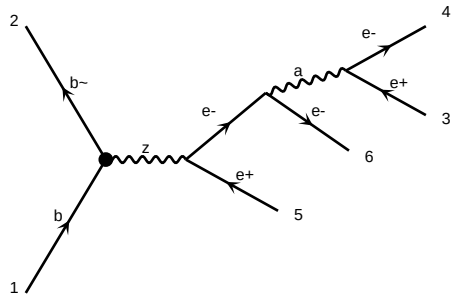

diagram 245 NP=1, NPcG=0, NPcGtil=0, NPcH=0, NPcHB=0, NPcHDD=0, NPcHW=0, NPcHWB=0, NPcW=0, NPdcHB=0, NPdcHW=0, NPeHB=0, NPeW=0, NPlH1=0, NPlH2=0, NPlHB=0, NPlHW=0, NPlebH=0, NPledH=0, NPleuH=0, NPlqd1=0, NPlqd8=0, NPlqu1=0, NPlqu8=0, NPqd1=0, NPqd8=0, NPqe=0, NPqu1=0, NPqu8=0, NPquqd1=0, NPquqd8=0, NPud1=0, NPud8=0, NPuu=0

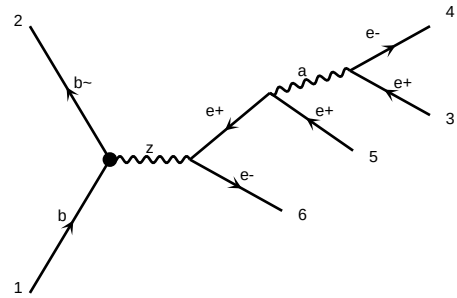

diagram 246 NP=1, NPcG=0, NPcGtil=0, NPcH=0, NPcHB=0, NPcHDD=0, NPcHW=0, NPcHWB=0, NPcW=0, NPdcHB=0, NPdcHW=0, NPeHB=0, NPeW=0, NPlH1=0, NPlH2=0, NPlHB=0, NPlHW=0, NPlebH=0, NPledH=0, NPleuH=0, NPlqd1=0, NPlqd8=0, NPlqu1=0, NPlqu8=0, NPqd1=0, NPqd8=0, NPqe=0, NPqu1=0, NPqu8=0, NPquqd1=0, NPquqd8=0, NPud1=0, NPud8=0, NPuu=0

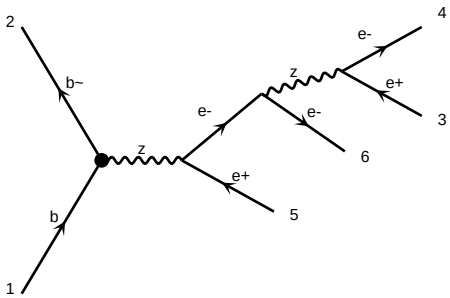

diagram 247 NP=1, NPcG=0, NPcGtil=0, NPcH=0, NPcHB=0, NPcHDD=0, NPcHW=0, NPcHWB=0, NPcW=0, NPdcHB=0, NPdcHW=0, NPeHB=0, NPeW=0, NPlH1=0, NPlH2=0, NPlHB=0, NPlHW=0, NPlebH=0, NPledH=0, NPleuH=0, NPlqd1=0, NPlqd8=0, NPlqu1=0, NPlqu8=0, NPqd1=0, NPqd8=0, NPqe=0, NPqu1=0, NPqu8=0, NPquqd1=0, NPquqd8=0, NPud1=0, NPud8=0, NPuu=0

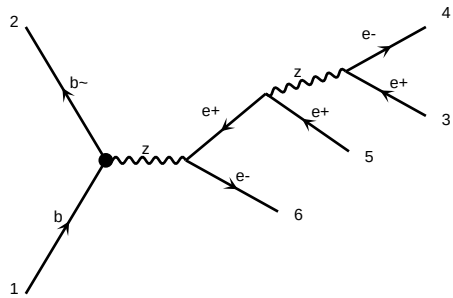

diagram 248 NP=1, NPcG=0, NPcGtil=0, NPcH=0, NPcHB=0, NPcHDD=0, NPcHW=0, NPcHWB=0, NPcW=0, NPdcHB=0, NPdcHW=0, NPeHB=0, NPeW=0, NPlH1=0, NPlH2=0, NPlHB=0, NPlHW=0, NPlebH=0, NPledH=0, NPleuH=0, NPlqd1=0, NPlqd8=0, NPlqu1=0, NPlqu8=0, NPqd1=0, NPqd8=0, NPqe=0, NPqu1=0, NPqu8=0, NPquqd1=0, NPquqd8=0, NPud1=0, NPud8=0, NPuu=0

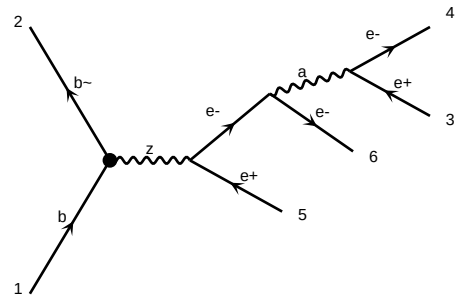

diagram 249 NP=1, NPcG=0, NPcGtil=0, NPcH=0, NPcHB=0, NPcHDD=0, NPcHW=0, NPcHWB=0, NPcW=0, NPdcHB=0, NPdcHW=0, NPeHB=0, NPeW=0, NPlH1=0, NPlH2=0, NPlHB=0, NPlHW=0, NPlebH=0, NPledH=0, NPleuH=0, NPlqd1=0, NPlqd8=0, NPlqu1=0, NPlqu8=0, NPqd1=0, NPqd8=0, NPqe=0, NPqu1=0, NPqu8=0, NPquqd1=0, NPquqd8=0, NPud1=0, NPud8=0, NPuu=0

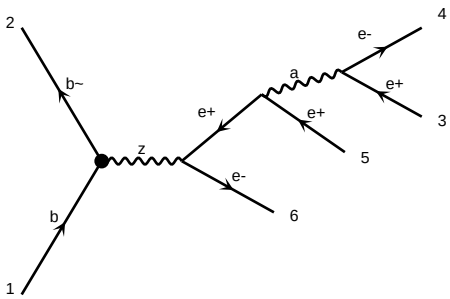

diagram 250 NP=1, NPcG=0, NPcGtil=0, NPcH=0, NPcHB=0, NPcHDD=0, NPcHW=0, NPcHWB=0, NPcW=0, NPdcHB=0, NPdcHW=0, NPeHB=0, NPeW=0, NPlH1=0, NPlH2=0, NPlHB=0, NPlHW=0, NPlebH=0, NPledH=0, NPleuH=0, NPlqd1=0, NPlqd8=0, NPlqu1=0, NPlqu8=0, NPqd1=0, NPqd8=0, NPqe=0, NPqu1=0, NPqu8=0, NPquqd1=0, NPquqd8=0, NPud1=0, NPud8=0, NPuu=0

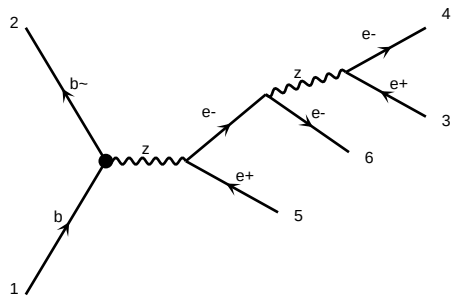

diagram 251 NP=1, NPcG=0, NPcGtil=0, NPcH=0, NPcHB=0, NPcHDD=0, NPcHW=0, NPcHWB=0, NPcW=0, NPdcHB=0, NPdcHW=0, NPeHB=0, NPeW=0, NPlH1=0, NPlH2=0, NPlHB=0, NPlHW=0, NPlebH=0, NPledH=0, NPleuH=0, NPlqd1=0, NPlqd8=0, NPlqu1=0, NPlqu8=0, NPqd1=0, NPqd8=0, NPqe=0, NPqu1=0, NPqu8=0, NPquqd1=0, NPquqd8=0, NPud1=0, NPud8=0, NPuu=0

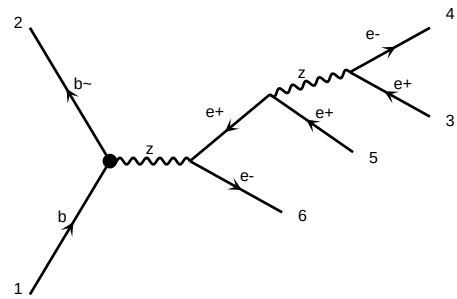

diagram 252 NP=1, NPcG=0, NPcGtil=0, NPcH=0, NPcHB=0, NPcHDD=0, NPcHW=0, NPcHWB=0, NPcW=0, NPdcHB=0, NPdcHW=0, NPeHB=0, NPeW=0, NPlH1=0, NPlH2=0, NPlHB=0, NPlHW=0, NPlebH=0, NPledH=0, NPleuH=0, NPlqd1=0, NPlqd8=0, NPlqu1=0, NPlqu8=0, NPqd1=0, NPqd8=0, NPqe=0, NPqu1=0, NPqu8=0, NPquqd1=0, NPquqd8=0, NPud1=0, NPud8=0, NPuu=0

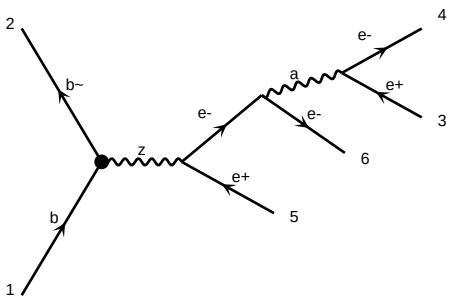

diagram 253 NP=1, NPcG=0, NPcGtil=0, NPcH=0, NPcHB=0, NPcHDD=0, NPcHW=0, NPcHWB=0, NPcW=0, NPdcHB=0, NPdcHW=0, NPeHB=0, NPeW=0, NPlH1=0, NPlH2=0, NPlHB=0, NPlHW=0, NPlebH=0, NPledH=0, NPleuH=0, NPlqd1=0, NPlqd8=0, NPlqu1=0, NPlqu8=0, NPqd1=0, NPqd8=0, NPqe=0, NPqu1=0, NPqu8=0, NPquqd1=0, NPquqd8=0, NPud1=0, NPud8=0, NPuu=0

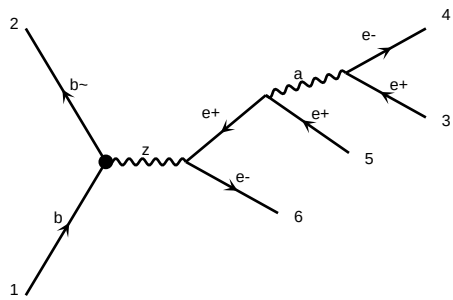

diagram 254 NP=1, NPcG=0, NPcGtil=0, NPcH=0, NPcHB=0, NPcHDD=0, NPcHW=0, NPcHWB=0, NPcW=0, NPdcHB=0, NPdcHW=0, NPeHB=0, NPeW=0, NPlH1=0, NPlH2=0, NPlHB=0, NPlHW=0, NPlebH=0, NPledH=0, NPleuH=0, NPlqd1=0, NPlqd8=0, NPlqu1=0, NPlqu8=0, NPqd1=0, NPqd8=0, NPqe=0, NPqu1=0, NPqu8=0, NPquqd1=0, NPquqd8=0, NPud1=0, NPud8=0, NPuu=0

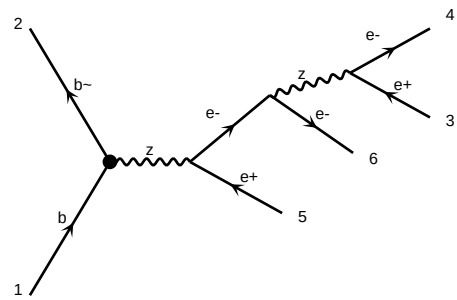

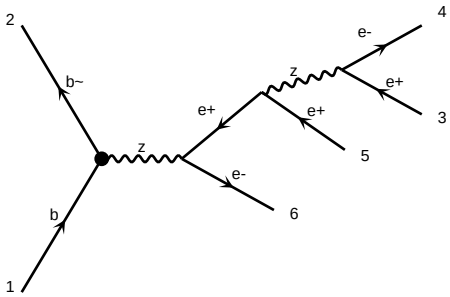

diagram 256 NP=1, NPcG=0, NPcGtil=0, NPcH=0, NPcHB=0, NPcHDD=0, NPcHW=0, NPcHWB=0, NPcW=0, NPcWtil=0, NPdcHB=0, NPdcHW=0, NPeHB=0, NPeHW=0, NPeW=0, NPlH1=0, NPlH2=0, NPlHDD=0, NPlHW=0, NPlHWB=0, NPlW=0, NPqHB=0, NPqHW=0, NPqW=0, NPuH=0, NPuW=0

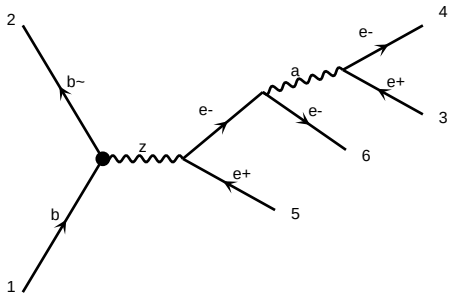

diagram 257 NP=1, NPcG=0, NPcGtil=0, NPcH=0, NPcHB=0, NPcHDD=0, NPcHW=0, NPcHWB=0, NPcW=0, NPcWtil=0, NPdcHB=0, NPdcHW=0, NPeHB=0, NPeHW=0, NPeW=0, NPlH1=0, NPlH2=0, NPlHDD=0, NPlHW=0, NPlHWB=0, NPlW=0, NPqHB=0, NPqHW=0, NPqW=0, NPuH=0, NPuW=0

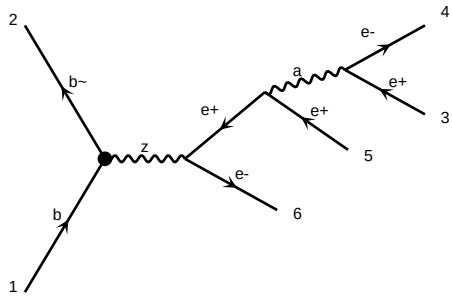

diagram 258 NP=1, NPcG=0, NPcGtil=0, NPcH=0, NPcHB=0, NPcHDD=0, NPcHW=0, NPcHWB=0, NPcW=0, NPcWtil=0, NPdcHB=0, NPdcHW=0, NPeHB=0, NPeHW=0, NPeW=0, NPlH1=0, NPlH2=0, NPlHDD=0, NPlHW=0, NPlHWB=0, NPlW=0, NPqHB=0, NPqHW=0, NPqW=0, NPuH=0, NPuW=0

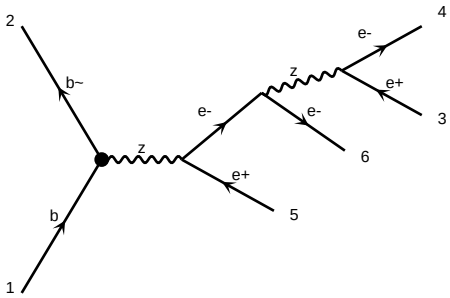

diagram 259 NP=1, NPcG=0, NPcGtil=0, NPcH=0, NPcHB=0, NPcHDD=0, NPcHW=0, NPcHWB=0, NPcW=0, NPcWtil=0, NPdcHB=0, NPdcHW=0, NPeHB=0, NPeHW=0, NPeW=0, NPlH1=0, NPlH2=0, NPlHDD=0, NPlHW=0, NPlHWB=0, NPlW=0, NPqHB=0, NPqHW=0, NPqW=0, NPuH=0, NPuW=0

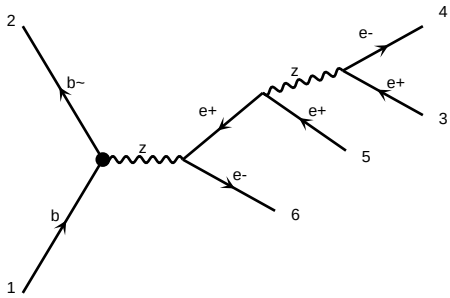

diagram 260 NP=1, NPcG=0, NPcGtil=0, NPcH=0, NPcHB=0, NPcHDD=0, NPcHW=0, NPcHWB=0, NPcW=0, NPcWtil=0, NPdcHB=0, NPdcHW=0, NPeHB=0, NPeHW=0, NPeW=0, NPlH1=0, NPlH2=0, NPlHDD=0, NPlHW=0, NPlHWB=0, NPlW=0, NPqHB=0, NPqHW=0, NPqW=0, NPuH=0, NPuW=0

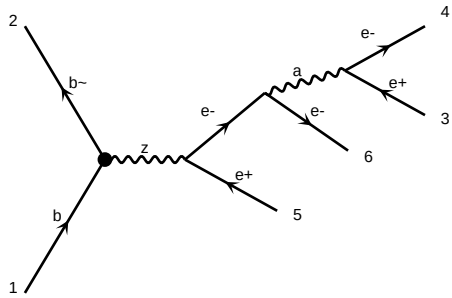

diagram 261 NP=1, NPcG=0, NPcGtil=0, NPcH=0, NPcHB=0, NPcHDD=0, NPcHW=0, NPcHWB=0, NPcW=0, NPcWtil=0, NPdcHB=0, NPdcHW=0, NPeHB=0, NPeHW=0, NPeW=0, NPlH1=0, NPlH2=0, NPlHDD=0, NPlHW=0, NPlHWB=0, NPlW=0, NPqHB=0, NPqHW=0, NPqW=0, NPuH=0, NPuW=0

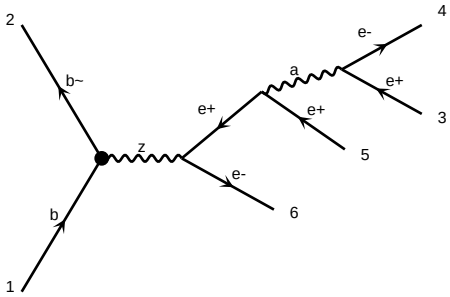

diagram 262 NP=1, NPcG=0, NPcGtil=0, NPcH=0, NPcHB=0, NPcHDD=0, NPcHW=0, NPcHWB=0, NPcW=0, NPcWtil=0, NPdcHB=0, NPdcHW=0, NPeHB=0, NPeHW=0, NPeW=0, NPlH1=0, NPlH2=0, NPlHDD=0, NPlHW=0, NPlHWB=0, NPlW=0, NPqHB=0, NPqHW=0, NPqW=0, NPuH=0, NPuW=0

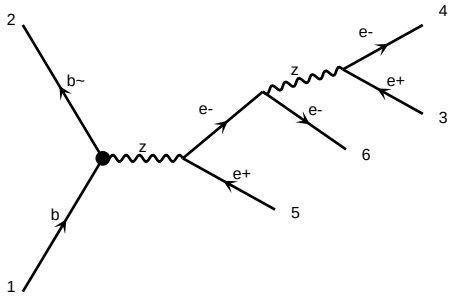

diagram 263 NP=1, NPcG=0, NPcGtil=0, NPcH=0, NPcHB=0, NPcHDD=0, NPcHW=0, NPcHWB=0, NPcW=0, NPcWtil=0, NPdcHB=0, NPdcHW=0, NPeHB=0, NPeHW=0, NPeW=0, NPlH1=0, NPlH2=0, NPlHDD=0, NPlHW=0, NPlHWB=0, NPlW=0, NPqHB=0, NPqHW=0, NPqW=0, NPuH=0, NPuW=0

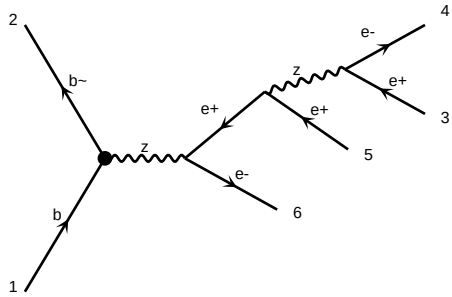

diagram 264 NP=1, NPcG=0, NPcGtil=0, NPcH=0, NPcHB=0, NPcHDD=0, NPcHW=0, NPcHWB=0, NPcW=0, NPcWtil=0, NPdcHB=0, NPdcHW=0, NPeHB=0, NPeHW=0, NPeW=0, NPlH1=0, NPlH2=0, NPlHDD=0, NPlHW=0, NPlHWB=0, NPlW=0, NPqHB=0, NPqHW=0, NPqW=0, NPuH=0, NPuW=0

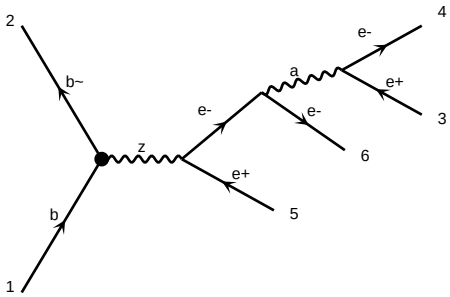

diagram 265 NP=1, NPcG=0, NPcGtil=0, NPcH=0, NPcHB=0, NPcHDD=0, NPcHW=0, NPcHWB=0, NPcW=0, NPcWtil=0, NPdcHB=0, NPdcHW=0, NPeHB=0, NPeHW=0, NPeW=0, NPlH1=0, NPlH2=0, NPlHDD=0, NPlHW=0, NPlHWB=0, NPlW=0, NPqHB=0, NPqHW=0, NPqW=0, NPuH=0, NPuW=0

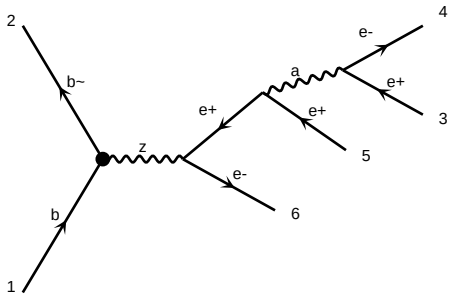

diagram 266 NP=1, NPcG=0, NPcGtil=0, NPcH=0, NPcHB=0, NPcHDD=0, NPcHW=0, NPcHWB=0, NPcW=0, NPcWtil=0, NPdcHB=0, NPdcHW=0, NPeHB=0, NPeHW=0, NPeW=0, NPlH1=0, NPlH2=0, NPlHDD=0, NPlHW=0, NPlHWB=0, NPlW=0, NPqHB=0, NPqHW=0, NPqW=0, NPuH=0, NPuW=0

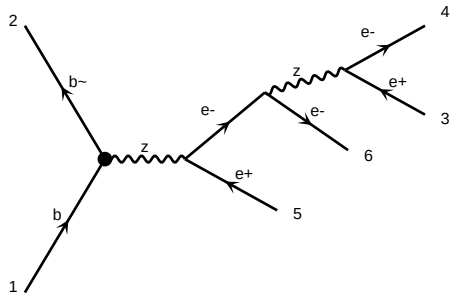

diagram 267 NP=1, NPcG=0, NPcGtil=0, NPcH=0, NPcHB=0, NPcHDD=0, NPcHW=0, NPcHWB=0, NPcW=0, NPcWtil=0, NPdcHB=0, NPdcHW=0, NPeHB=0, NPeHW=0, NPeW=0, NPlH1=0, NPlH2=0, NPlHDD=0, NPlHW=0, NPlHWB=0, NPlW=0, NPqHB=0, NPqHW=0, NPqW=0, NPuH=0, NPuW=0

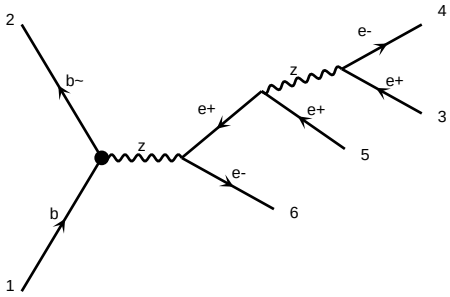

diagram 268 NP=1, NPcG=0, NPcGtil=0, NPcH=0, NPcHB=0, NPcHDD=0, NPcHW=0, NPcHWB=0, NPcW=0, NPcWtil=0, NPdcHB=0, NPdcHW=0, NPeHB=0, NPeHW=0, NPeW=0, NPlH1=0, NPlH2=0, NPlHDD=0, NPlHW=0, NPlHWB=0, NPlW=0, NPqHB=0, NPqHW=0, NPqW=0, NPuH=0, NPuW=0

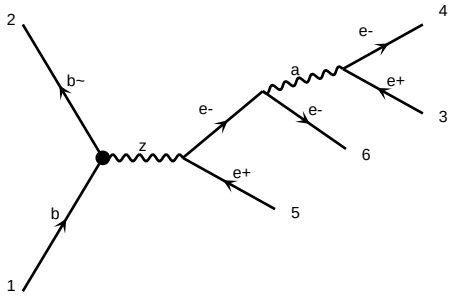

diagram 269 NP=1, NPcG=0, NPcGtil=0, NPcH=0, NPcHB=0, NPcHDD=0, NPcHW=0, NPcHWB=0, NPcW=0, NPcWtil=0, NPdcHB=0, NPdcHW=0, NPeHB=0, NPeHW=0, NPeW=0, NPlH1=0, NPlH2=0, NPlHDD=0, NPlHW=0, NPlHWB=0, NPlW=0, NPqHB=0, NPqHW=0, NPqW=0, NPuH=0, NPuW=0

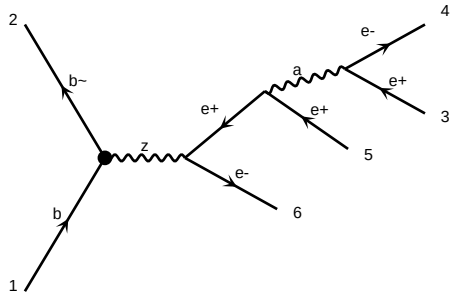

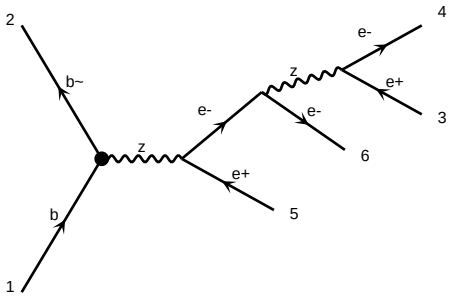

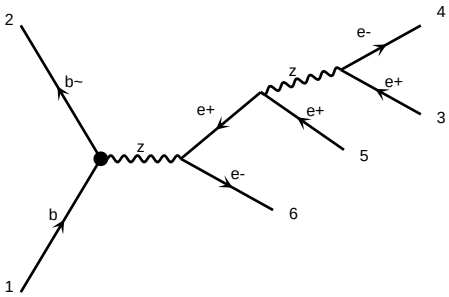

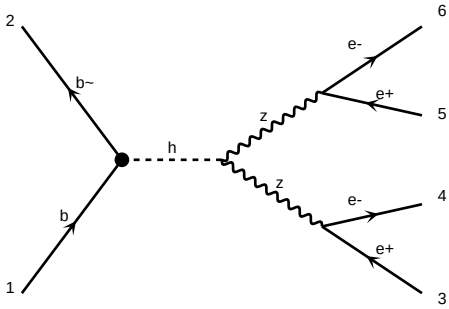

diagram 271 NP=1, NPcG=0, NPcGtil=0, NPcH=0, NPcHB=0, NPcHBtil=0, NPcHDD=0, NPcHW=0, NPcHWB=0, NPcHWtil=0, NPcHWtilB=0, NPcW=0, NPcWtil=0, NPdcHQ3=0, NPdcHQ=0, NPdcHbox=0, NPdcHu=0, NPdcHudBR=0, NPdcHudI=0, NPdcHudR=0, NPeHDD=0, NPeHW=0, NPeHWB=0, NPeW=0, NPlHDD=0, NPlHQ3=0, NPlHQ=0, NPlHbox=0, NPlHl=0, NPlHlBR=0, NPlHlI=0, NPlHlR=0, NPlHu=0, NPlHudBR=0, NPlHudI=0, NPlHudR=0, NPlebQBR=0, NPlebQI=0, NPlebQR=0, NPleuBR=0, NPleuI=0, NPleuR=0, NPlqBR1=0, NPlqBR3=0, NPlqI1=0, NPlqI3=0, NPlqR1=0, NPlqR3=0, NPquBR1=0, NPquBR8=0, NPquI1=0, NPquI8=0, NPquR1=0, NPquR8=0, NPqHDD=0, NPqHQ3=0, NPqHQ=0, NPqHbox=0, NPqHu=0, NPqHudBR=0, NPqHudI=0, NPqHudR=0, NPqeBR1=0, NPqeBR3=0, NPqeI1=0, NPqeI3=0, NPqeR1=0, NPqeR3=0, NPquBR1=0, NPquBR8=0, NPquI1=0, NPquI8=0, NPquR1=0, NPquR8=0, NPuHDD=0, NPuHW=0, NPuHWB=0, NPuW=0, NPuWtil=0, NPudBR1=0, NPudBR8=0, NPudI1=0, NPudI8=0, NPudR1=0, NPudR8=0, NPuuBR1=0, NPuuBR8=0, NPuuI1=0, NPuuI8=0, NPuuR1=0, NPuuR8=0, NPveBR1=0, NPveBR3=0, NPveI1=0, NPveI3=0, NPveR1=0, NPveR3=0, NPvuBR1=0, NPvuBR8=0, NPvuI1=0, NPvuI8=0, NPvuR1=0, NPvuR8=0, NPvdBR1=0, NPvdBR8=0, NPvdI1=0, NPvdI8=0, NPvdR1=0, NPvdR8=0, NPveveBR1=0, NPveveI1=0, NPveveR1=0, NPvuveBR1=0, NPvuveI1=0, NPvuveR1=0, NPvdveBR1=0, NPvdveI1=0, NPvdveR1=0, NPvuvuBR1=0, NPvuvuBR8=0, NPvuvuI1=0, NPvuvuI8=0, NPvuvuR1=0, NPvuvuR8=0, NPvdvuBR1=0, NPvdvuBR8=0, NPvdvuI1=0, NPvdvuI8=0, NPvdvuR1=0, NPvdvuR8=0, NPvdvdBR1=0, NPvdvdBR8=0, NPvdvdI1=0, NPvdvdI8=0, NPvdvdR1=0, NPvdvdR8=0, NPveuBR1=0, NPveuBR3=0, NPveuI1=0, NPveuI3=0, NPveuR1=0, NPveuR3=0, NPvedBR1=0, NPvedBR3=0, NPvedI1=0, NPvedI3=0, NPvedR1=0, NPvedR3=0, NPvuduBR1=0, NPvuduBR8=0, NPvuduI1=0, NPvuduI8=0, NPvuduR1=0, NPvuduR8=0, NPvdeBR1=0, NPvdeBR3=0, NPvdeI1=0, NPvdeI3=0, NPvdeR1=0, NPvdeR3=0, NPvdduBR1=0, NPvdduBR8=0, NPvdduI1=0, NPvdduI8=0, NPvdduR1=0, NPvdduR8=0, NPveeBR1=0, NPveeI1=0, NPveeR1=0, NPvueBR1=0, NPvueI1=0, NPvueR1=0, NPvdeBR1=0, NPvdeI1=0, NPvdeR1=0, NPvuduBR1=0, NPvuduBR8=0, NPvuduI1=0, NPvuduI8=0, NPvuduR1=0, NPvuduR8=0, NPvddBR1=0, NPvddBR8=0, NPvddI1=0, NPvddI8=0, NPvddR1=0, NPvddR8=0, NPveveBR1=0, NPveveI1=0, NPveveR1=0, NPvueBR1=0, NPvueI1=0, NPvueR1=0, NPvdeBR1=0, NPvdeI1=0, NPvdeR1=0, NPvuvuBR1=0, NPvuvuBR8=0, NPvuvuI1=0, NPvuvuI8=0, NPvuvuR1=0, NPvuvuR8=0, NPvdvuBR1=0, NPvdvuBR8=0, NPvdvuI1=0, NPvdvuI8=0, NPvdvuR1=0, NPvdvuR8=0, NPvdvdBR1=0, NPvdvdBR8=0, NPvdvdI1=0, NPvdvdI8=0, NPvdvdR1=0, NPvdvdR8=0, NPveuBR1=0, NPveuBR3=0, NPveuI1=0, NPveuI3=0, NPveuR1=0, NPveuR3=0, NPvedBR1=0, NPvedBR3=0, NPvedI1=0, NPvedI3=0, NPvedR1=0, NPvedR3=0, NPvuduBR1=0, NPvuduBR8=0, NPvuduI1=0, NPvuduI8=0, NPvuduR1=0, NPvuduR8=0, NPvdeBR1=0, NPvdeBR3=0, NPvdeI1=0, NPvdeI3=0, NPvdeR1=0, NPvdeR3=0, NPvdduBR1=0, NPvdduBR8=0, NPvdduI1=0, NPvdduI8=0, NPvdduR1=0, NPvdduR8=0, NPveeBR1=0, NPveeI1=0, NPveeR1=0, NPvueBR1=0, NPvueI1=0, NPvueR1=0, NPvdeBR1=0, NPvdeI1=0, NPvdeR1

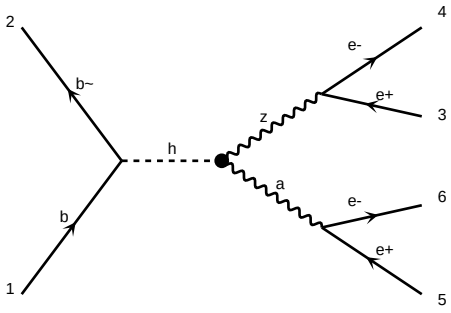

diagram 286 NP=1, NPcG=0, NPcGtil=0, NPcH=0, NPcHB=0, NPcHBtil=0, NPcHDD=0, NPcHW=0, NPcHWB=0, NPcHWtil=0, NPcHWtilB=0, NPcbH=0, NPcbW=0, NPcbWtil=0, NPcll=0, NPclq1=0, NPclq3=0, NPcqq1=0, NPcqq11=0, NPcqq3=0, NPcqq31=0, NPcuH=0, NPcuW=0, NPcuWtil=0, NPlq1=0, NPlq3=0, NPqq1=0, NPqq11=0, NPqq3=0, NPqq31=0, NPquqd1=0, NPquqd11=0, NPquqd8=0, NPquqd81=0, NPqu1=0, NPqu8=0, NPuu=0, NPuu1=0

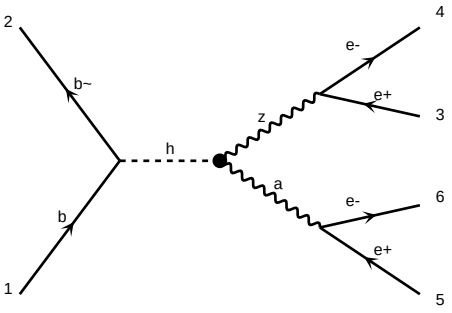

diagram 287 NP=1, NPcG=0, NPcGtil=0, NPcH=0, NPcHB=0, NPcHBtil=0, NPcHDD=0, NPcHW=0, NPcHWB=0, NPcHWtil=0, NPcHWtilB=0, NPcbH=0, NPcbW=0, NPcbWtil=0, NPcll=0, NPclq1=0, NPclq3=0, NPcqq1=0, NPcqq11=0, NPcqq3=0, NPcqq31=0, NPcuH=0, NPcuW=0, NPcuWtil=0, NPlq1=0, NPlq3=0, NPqq1=0, NPqq11=0, NPqq3=0, NPqq31=0, NPquqd1=0, NPquqd11=0, NPquqd8=0, NPquqd81=0, NPqu1=0, NPqu8=0, NPuu=0, NPuu1=0

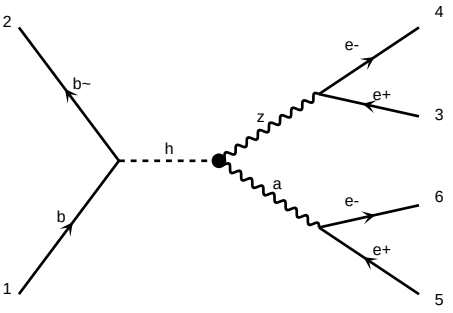

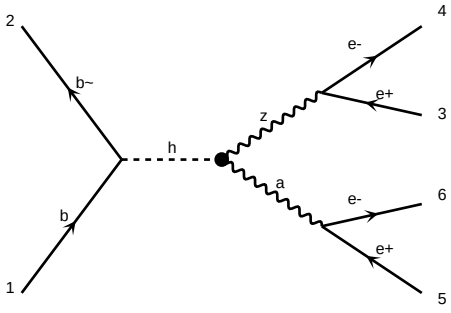

diagram 289 NP=1, NPcG=0, NPcGtil=0, NPcH=0, NPcHB=0, NPcHBtil=0, NPcHDD=0, NPcHW=0, NPcHWB=0, NPcHWtil=0, NPcHWtilB=0, NPcbH=0, NPcbW=0, NPcbWtil=0, NPcll=0, NPclq1=0, NPclq3=0, NPcqq1=0, NPcqq11=0, NPcqq3=0, NPcqq31=0, NPcuH=0, NPcuW=0, NPcuWtil=0, NPlq1=0, NPlq3=0, NPqq1=0, NPqq11=0, NPqq3=0, NPqq31=0, NPquqd1=0, NPquqd11=0, NPquqd8=0, NPquqd81=0, NPqu1=0, NPqu8=0, NPuu=0, NPuu1=0

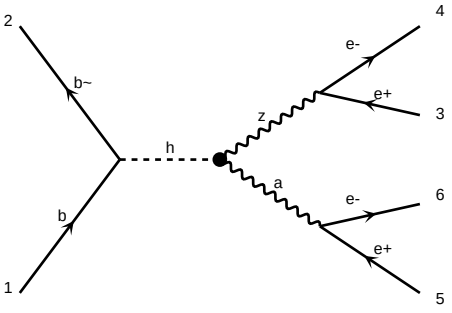

diagram 290 NP=1, NPcG=0, NPcGtil=0, NPcH=0, NPcHB=0, NPcHBtil=0, NPcHDD=0, NPcHW=0, NPcHWB=0, NPcHWtil=0, NPcHWtilB=0, NPcbH=0, NPcbW=0, NPcbWtil=0, NPcll=0, NPclq1=0, NPclq3=0, NPcqq1=0, NPcqq11=0, NPcqq3=0, NPcqq31=0, NPcuH=0, NPcuW=0, NPcuWtil=0, NPlq1=0, NPlq3=0, NPqq1=0, NPqq11=0, NPqq3=0, NPqq31=0, NPquqd1=0, NPquqd11=0, NPquqd8=0, NPquqd81=0, NPqu1=0, NPqu8=0, NPuu=0, NPuu1=0

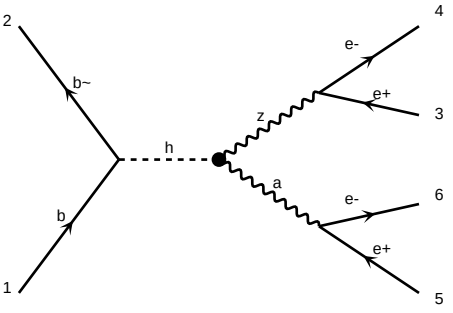

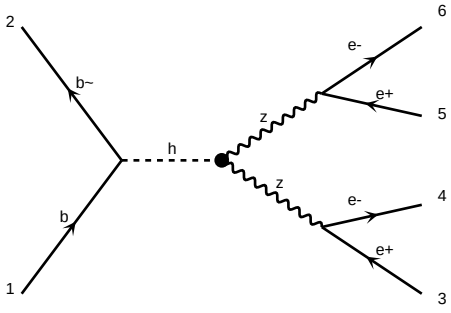

diagram 292 NP=1, NPcG=0, NPcGtil=0, NPcH=0, NPcHB=0, NPcHBtil=0, NPcHDD=0, NPcHW=0, NPcHWB=0, NPcHWtil=0, NPcHWtilB=0, NPcbH=0, NPcbW=0, NPcbWtil=0, NPcll=0, NPclq1=0, NPclq3=0, NPcqq1=0, NPcqq11=0, NPcqq3=0, NPcqq31=0, NPcuH=0, NPcuW=0, NPcuWtil=0, NPlq1=0, NPlq3=0, NPqq1=0, NPqq11=0, NPqq3=0, NPqq31=0, NPquqd1=0, NPquqd11=0, NPquqd8=0, NPquqd81=0, NPqu1=0, NPqu8=0, NPuu=0, NPuu1=0

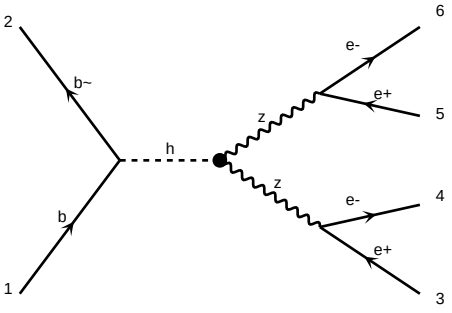

diagram 293 NP=1, NPcG=0, NPcGtil=0, NPcH=0, NPcHB=0, NPcHBtil=0, NPcHDD=0, NPcHW=0, NPcHWB=0, NPcHWtil=0, NPcHWtilB=0, NPcbH=0, NPcbW=0, NPcbWtil=0, NPcll=0, NPclq1=0, NPclq3=0, NPcqq1=0, NPcqq11=0, NPcqq3=0, NPcqq31=0, NPcuH=0, NPcuW=0, NPcuWtil=0, NPlq1=0, NPlq3=0, NPqq1=0, NPqq11=0, NPqq3=0, NPqq31=0, NPquqd1=0, NPquqd11=0, NPquqd8=0, NPquqd81=0, NPqu1=0, NPqu8=0, NPuu=0, NPuu1=0

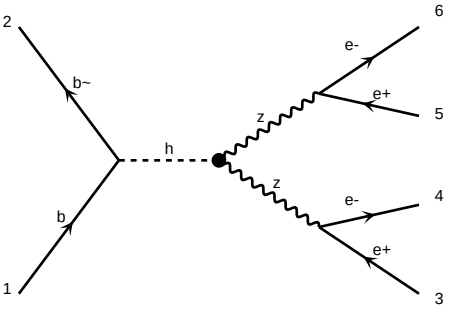

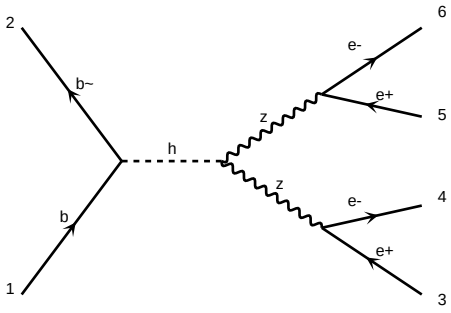

diagram 295 NP=0, NPcG=0, NPcGtil=0, NPcH=0, NPcHB=0, NPcHBtil=0, NPcHDD=0, NPcHW=0, NPcHWB=0, NPcHWtil=0, NPcHWtilB=0, NPcbH=0, NPcbW=0, NPcbWtil=0, NPcll=0, NPclq1=0, NPclq3=0, NPcqq1=0, NPcqq11=0, NPcqq3=0, NPcqq31=0, NPcuH=0, NPcuW=0, NPcuWtil=0, NPlq1=0, NPlq3=0, NPqq1=0, NPqq11=0, NPqq3=0, NPqq31=0, NPquqd1=0, NPquqd11=0, NPquqd8=0, NPquqd81=0, NPqu1=0, NPqu8=0, NPuu=0, NPuu1=0

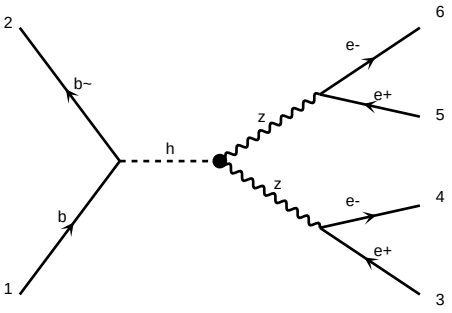

diagram 296 NP=1, NPcG=0, NPcGtil=0, NPcH=0, NPcHB=0, NPcHBtil=0, NPcHDD=0, NPcHW=0, NPcHWB=0, NPcHWtil=0, NPcHWtilB=0, NPcbH=0, NPcbW=0, NPcbWtil=0, NPcll=0, NPclq1=0, NPclq3=0, NPcqq1=0, NPcqq11=0, NPcqq3=0, NPcqq31=0, NPcuH=0, NPcuW=0, NPcuWtil=0, NPlq1=0, NPlq3=0, NPqq1=0, NPqq11=0, NPqq3=0, NPqq31=0, NPquqd1=0, NPquqd11=0, NPquqd8=0, NPquqd81=0, NPqu1=0, NPqu8=0, NPuu=0, NPuu1=0

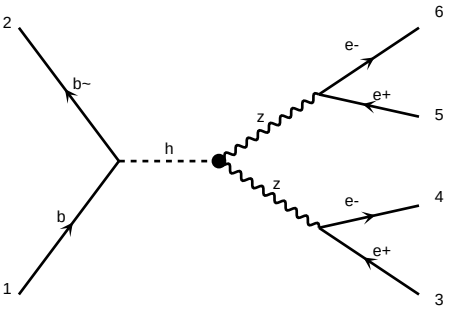

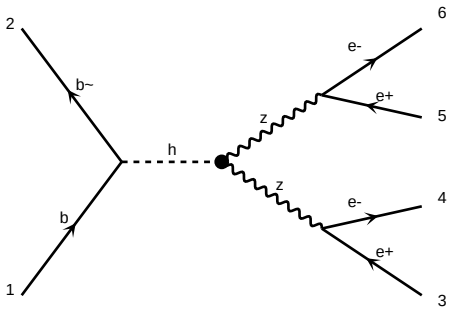

diagram 298 NP=1, NPcG=0, NPcGtil=0, NPcH=0, NPcHB=0, NPcHBtil=0, NPcHDD=0, NPcHW=0, NPcHWB=0, NPcHWtil=0, NPcHWtilB=0, NPcbH=0, NPcbW=0, NPcbWtil=0, NPcll=0, NPclq1=0, NPclq3=0, NPcqq1=0, NPcqq11=0, NPcqq3=0, NPcqq31=0, NPcuH=0, NPcuW=0, NPcuWtil=0, NPlq1=0, NPlq3=0, NPqq1=0, NPqq11=0, NPqq3=0, NPqq31=0, NPquqd1=0, NPquqd11=0, NPquqd8=0, NPquqd81=0, NPqu1=0, NPqu8=0, NPuu=0, NPuu1=0

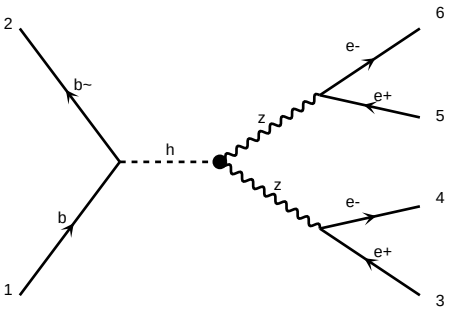

diagram 299 NP=1, NPcG=0, NPcGtil=0, NPcH=0, NPcHB=0, NPcHBtil=0, NPcHDD=0, NPcHW=0, NPcHWB=0, NPcHWtil=0, NPcHWtilB=0, NPcbH=0, NPcbW=0, NPcbWtil=0, NPcll=0, NPclq1=0, NPclq3=0, NPcqq1=0, NPcqq11=0, NPcqq3=0, NPcqq31=0, NPcuH=0, NPcuW=0, NPcuWtil=0, NPlq1=0, NPlq3=0, NPqq1=0, NPqq11=0, NPqq3=0, NPqq31=0, NPquqd1=0, NPquqd11=0, NPquqd8=0, NPquqd81=0, NPqu1=0, NPqu8=0, NPuu=0, NPuu1=0

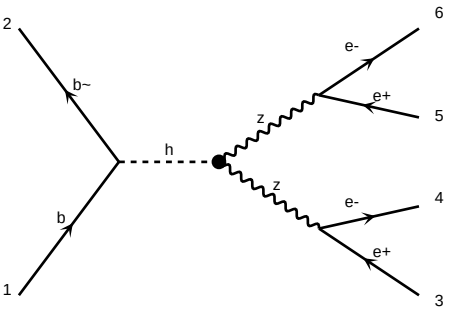

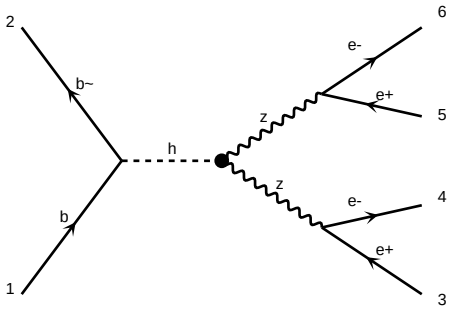

diagram 301 NP=1, NPcG=0, NPcGtil=0, NPcH=0, NPcHB=0, NPcHDD=0, NPcHW=0, NPcHWB=0, NPcW=0, NPcWtil=0, NPdB=0, NPdBtil=0, NPdG=0, NPdW=0, NPlambda=0, NPlq1=0, NPlq3=0, NPqd1=0, NPqd8=0, NPqe=0, NPqq1=0, NPqq3=0, NPqu1=0, NPqu8=0, NPuB=0, NPuG=0, NPuW=0, NPuu=0, NPxB=0, NPxG=0, NPxW=0, NPxWtil=0

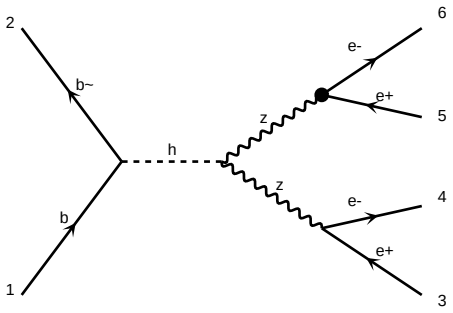

diagram 304 NP=1, NPcG=0, NPcGtil=0, NPcH=0, NPcHB=0, NPcHDD=0, NPcHW=0, NPcHWB=0, NPcW=0, NPcWtil=0, NPdB=0, NPdBtil=0, NPdG=0, NPdW=0, NPlambda=0, NPlq1=0, NPlq3=0, NPqd1=0, NPqd8=0, NPqe=0, NPqq1=0, NPqq3=0, NPqu1=0, NPqu8=0, NPuB=0, NPuG=0, NPuW=0, NPuu=0, NPxB=0, NPxG=0, NPxW=0, NPxWtil=0

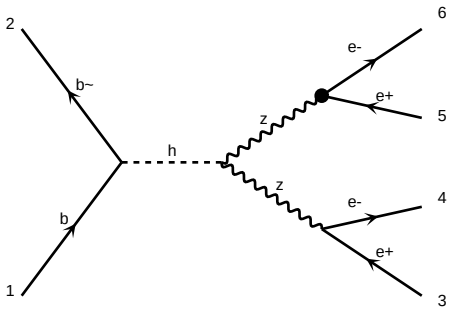

diagram 307 NP=1, NPcG=0, NPcGtil=0, NPcH=0, NPcHB=0, NPcHDD=0, NPcHW=0, NPcHWB=0, NPcW=0, NPcWtil=0, NPdB=0, NPdBtil=0, NPdG=0, NPdW=0, NPlambda=0, NPlq1=0, NPlq3=0, NPqd1=0, NPqd8=0, NPqe=0, NPqq1=0, NPqq3=0, NPqu1=0, NPqu8=0, NPuB=0, NPuG=0, NPuW=0, NPuu=0, NPxB=0, NPxG=0, NPxW=0, NPxWtil=0

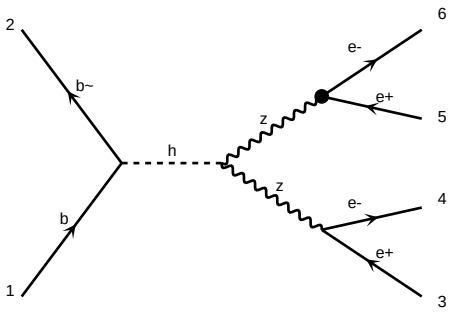

diagram 310 NP=1, NPcG=0, NPcGtil=0, NPcH=0, NPcHB=0, NPcHDD=0, NPcHW=0, NPcHWB=0, NPcW=0, NPcWtil=0, NPdB=0, NPdBtil=0, NPdG=0, NPdW=0, NPlambda=0, NPlq1=0, NPlq3=0, NPqd1=0, NPqd8=0, NPqe=0, NPqq1=0, NPqq3=0, NPqu1=0, NPqu8=0, NPuB=0, NPuG=0, NPuW=0, NPuu=0, NPxB=0, NPxG=0, NPxW=0, NPxWtil=0

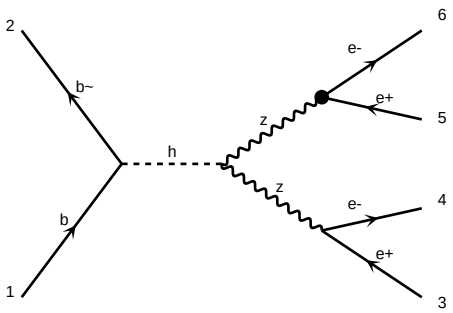

diagram 313 NP=1, NPcG=0, NPcGtil=0, NPcH=0, NPcHB=0, NPcHDD=0, NPcHW=0, NPcHWB=0, NPcW=0, NPcWtil=0, NPdB=0, NPdBtil=0, NPdG=0, NPdW=0, NPlambda=0, NPlq1=0, NPlq3=0, NPqd1=0, NPqd8=0, NPqe=0, NPqq1=0, NPqq3=0, NPqu1=0, NPqu8=0, NPuB=0, NPuG=0, NPuW=0, NPuu=0, NPxB=0, NPxG=0, NPxW=0, NPxWtil=0

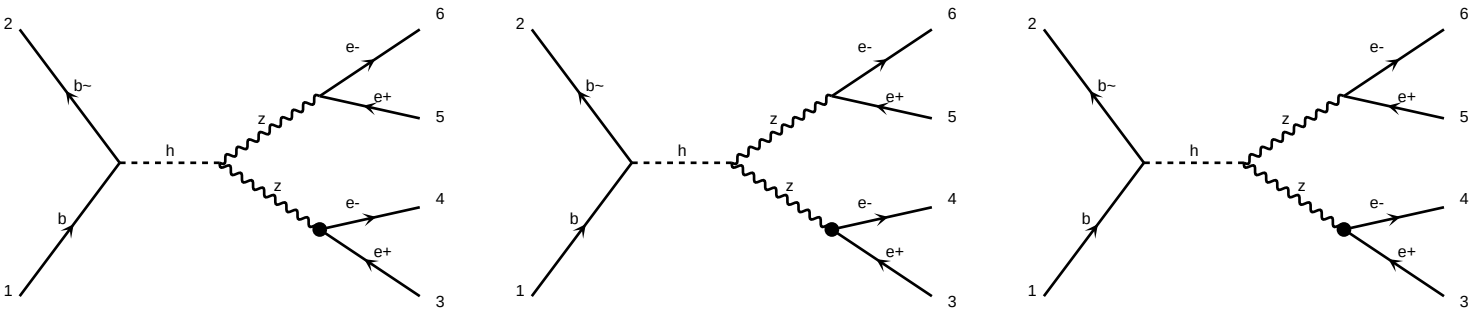

diagram 316 NP=1, NPcG=0, NPcGtil=0, NPcH=0, NPcHB=0, NPcHD=0, NPcHW=0, NPcHWB=0, NPcW=0, NPcWtil=0

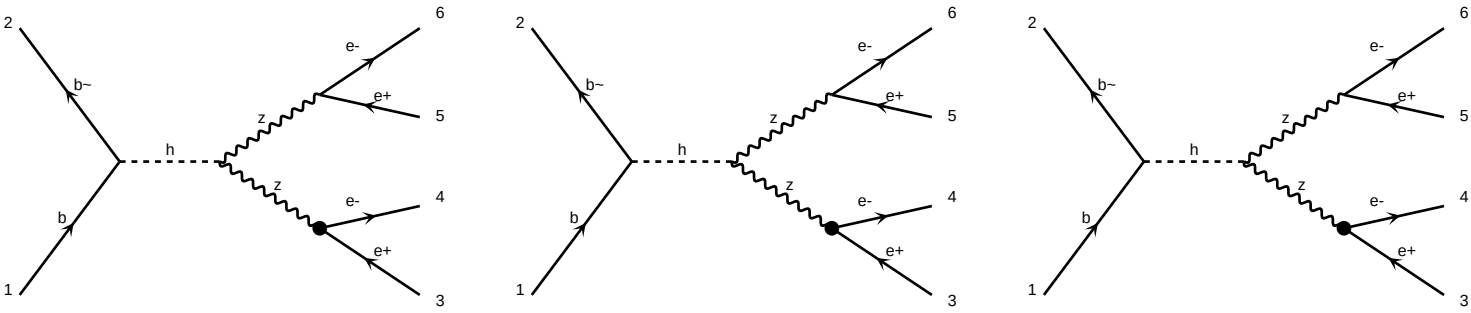

diagram 319 NP=1, NPcG=0, NPcGtil=0, NPcH=0, NPcHB=0, NPcHD=0, NPcHW=0, NPcHWB=0, NPcW=0, NPcWtil=0

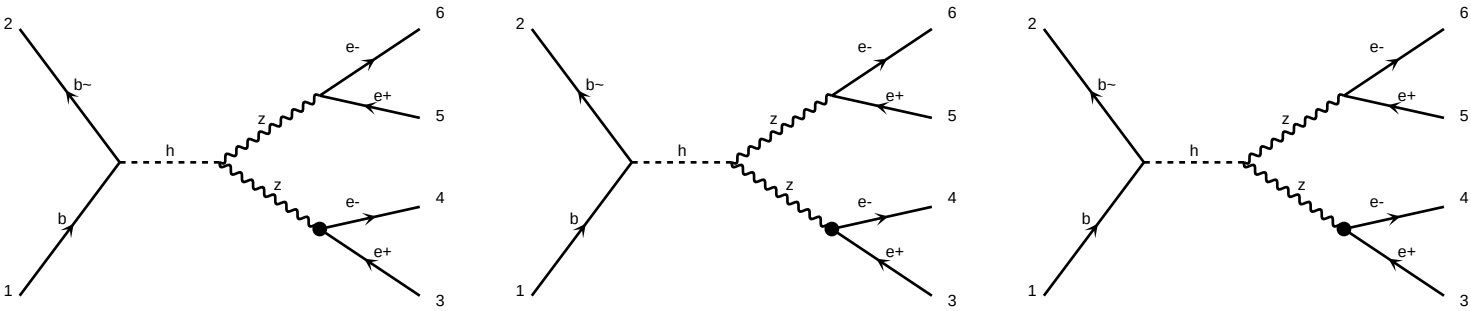

diagram 322 NP=1, NPcG=0, NPcGtil=0, NPcH=0, NPcHB=0, NPcHD=0, NPcHW=0, NPcHWB=0, NPcW=0, NPcWtil=0

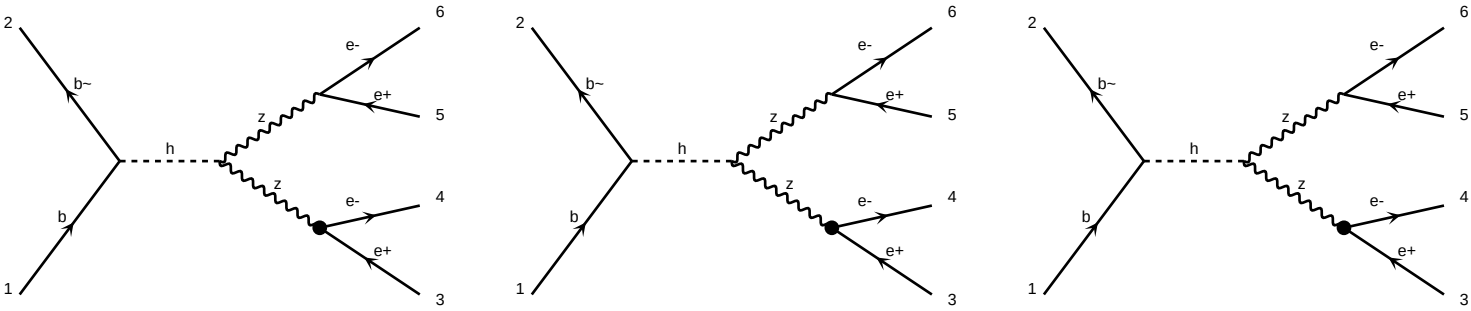

diagram 325 NP=1, NPcG=0, NPcGtil=0, NPcH=0, NPcHB=0, NPcHD=0, NPcHW=0, NPcHWB=0, NPcW=0, NPcWtil=0

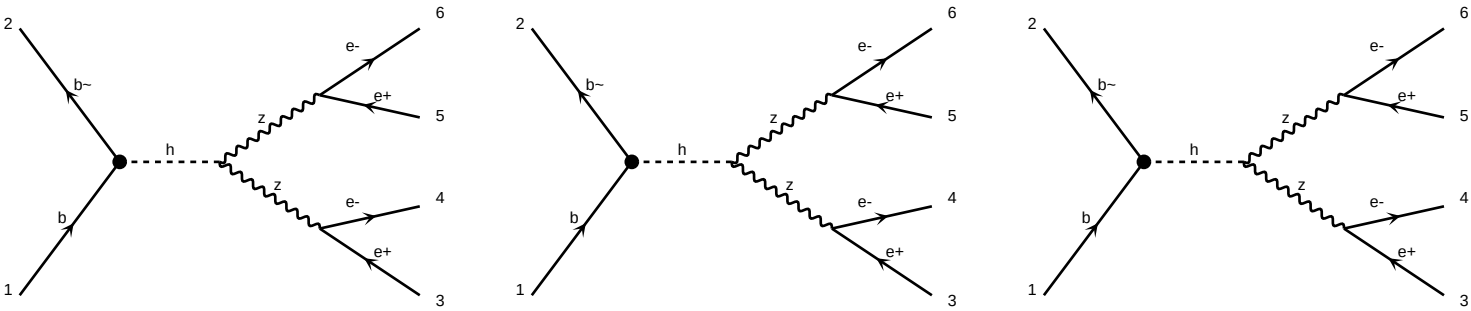

diagram 328 NP=1, NPcG=0, NPcGtil=0, NPcH=0, NPcHB=0, NPcHD=0, NPcHW=0, NPcHWB=0, NPcW=0, NPcWtil=0

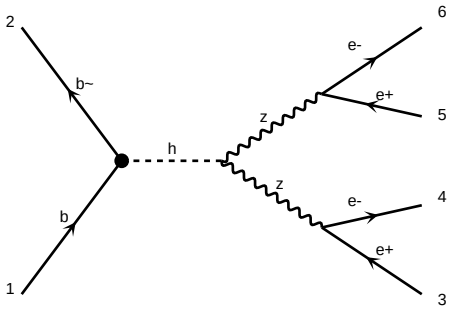

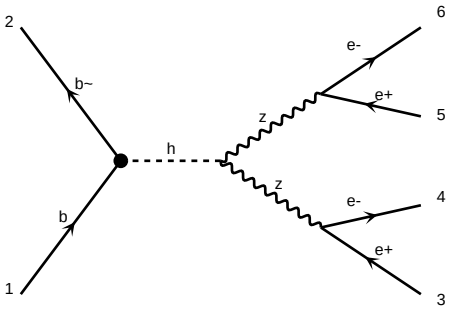

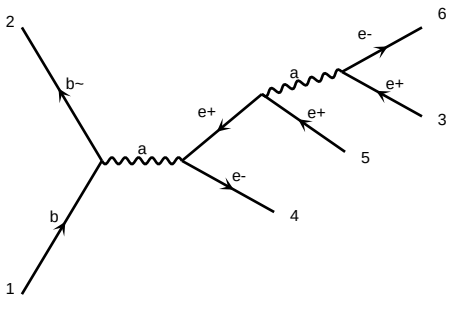

diagram 331 NP=1, NPcG=0, NPcGtil=0, NPcH=0, NPcHB=0, NPcHDD=0, NPcHW=0, NPcHWB=0, NPcW=0, NPeHB=0, NPeW=0, NPlebQ=0, NPlebQ3=0, NPlebQ3_1=0, NPlebQ3_2=0, NPlebQ3_3=0, NPlebQ_1=0, NPlebQ_2=0, NPlebQ_3=0, NPlebQ_4=0, NPlebQ_5=0, NPlebQ_6=0, NPlebQ_7=0, NPlebQ_8=0, NPlebQ_9=0, NPlebQ_10=0, NPlebQ_11=0, NPlebQ_12=0, NPlebQ_13=0, NPlebQ_14=0, NPlebQ_15=0, NPlebQ_16=0, NPlebQ_17=0, NPlebQ_18=0, NPlebQ_19=0, NPlebQ_20=0, NPlebQ_21=0, NPlebQ_22=0, NPlebQ_23=0, NPlebQ_24=0, NPlebQ_25=0, NPlebQ_26=0, NPlebQ_27=0, NPlebQ_28=0, NPlebQ_29=0, NPlebQ_30=0, NPlebQ_31=0, NPlebQ_32=0, NPlebQ_33=0, NPlebQ_34=0, NPlebQ_35=0, NPlebQ_36=0, NPlebQ_37=0, NPlebQ_38=0, NPlebQ_39=0, NPlebQ_40=0,

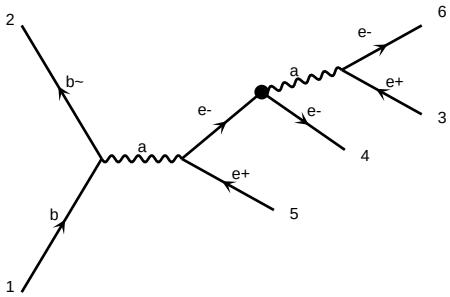

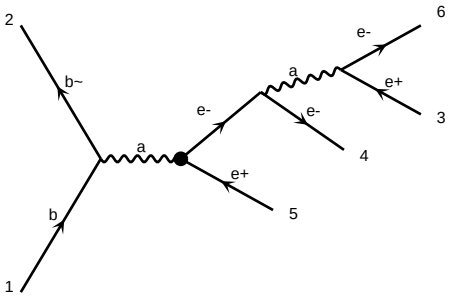

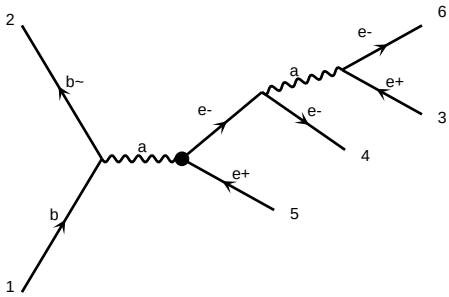

diagram 346 NP=1, NPcG=0, NPcGtil=0, NPcH=0, NPcHB=0, NPcHDD=0, NPcHW=0, NPcHWB=0, NPcW=0, NPeHB=0, NPeW=0, NPlH1=0, NPlH3=0, NPlHB=0, NPlHW=0, NPlL1=0, NPlL3=0, NPlQ1=0, NPlQ3=0, NPlebQ=0, NPleH=0, NPleW=0, NPqG=0, NPqH=0, NPquG=0, NPquH=0, NPqW=0, NPuG=0, NPuH=0, NPuW=0

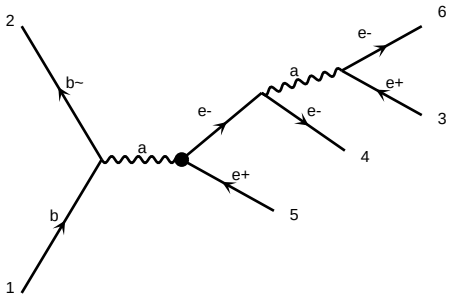

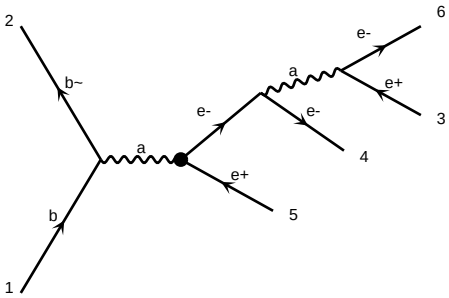

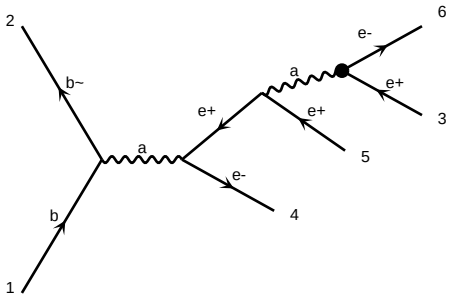

diagram 349 NP=1, NPcG=0, NPcGtil=0, NPcH=0, NPcHB=0, NPcHDD=0, NPcHW=0, NPcHWB=0, NPcW=0, NPeHB=0, NPeW=0, NPlH1=0, NPlH3=0, NPlHB=0, NPlHW=0, NPlL1=0, NPlL3=0, NPlQ1=0, NPlQ3=0, NPlebQ=0, NPleH=0, NPleW=0, NPqG=0, NPqH=0, NPquG=0, NPquH=0, NPqW=0, NPuG=0, NPuH=0, NPuW=0

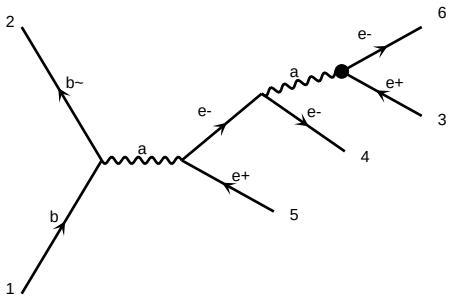

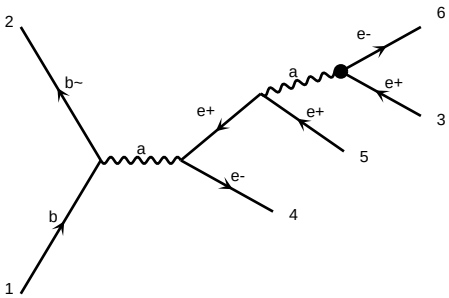

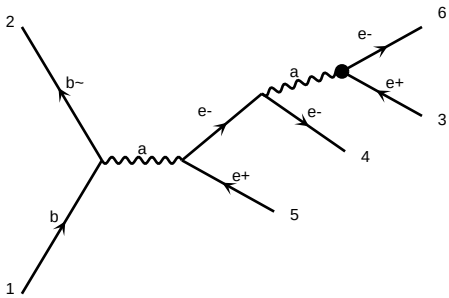

diagram 352 NP=1, NPcG=0, NPcGtil=0, NPcH=0, NPcHB=0, NPcHDD=0, NPcHW=0, NPcHWB=0, NPcW=0, NPeHB=0, NPeW=0, NPlH1=0, NPlH3=0, NPlHB=0, NPlHW=0, NPlL1=0, NPlL3=0, NPlQ1=0, NPlQ3=0, NPlebQ=0, NPleH=0, NPleW=0, NPqG=0, NPqH=0, NPquG=0, NPquH=0, NPqW=0, NPuG=0, NPuH=0, NPuW=0

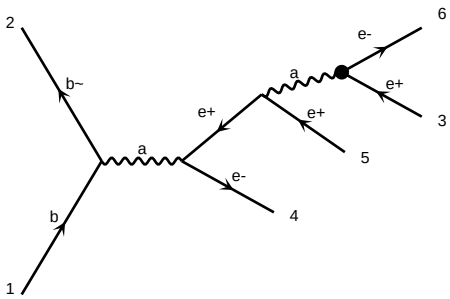

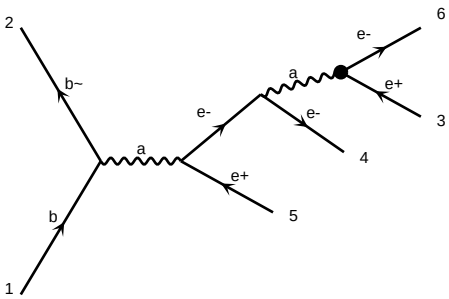

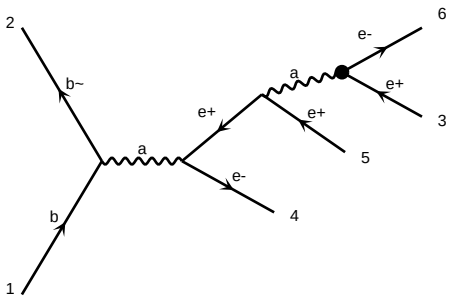

diagram 355 NP=1, NPcG=0, NPcGtil=0, NPcH=0, NPcHB=0, NPcHDD=0, NPcHW=0, NPcHWB=0, NPcW=0, NPeHB=0, NPeW=0, NPlH1=0, NPlH3=0, NPlHB=0, NPlHW=0, NPlL1=0, NPlL3=0, NPlQ1=0, NPlQ3=0, NPlebQ=0, NPleH=0, NPleW=0, NPqG=0, NPqH=0, NPquG=0, NPquH=0, NPqW=0, NPuG=0, NPuH=0, NPuW=0

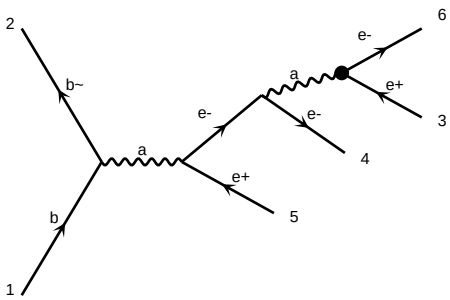

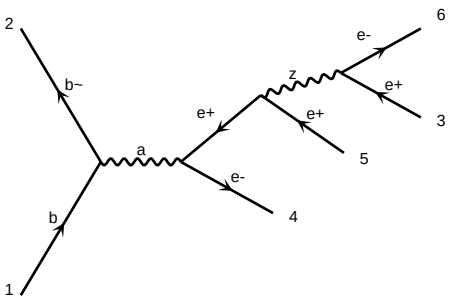

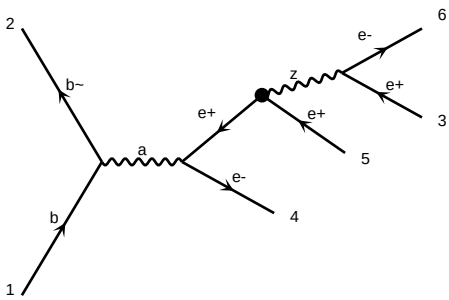

diagram 358 NP=1, NPcG=0, NPcGtil=0, NPcH=0, NPcHB=0, NPcHDD=0, NPcHW=0, NPcHWB=0, NPcW=0, NPeHB=0, NPeW=0, NPlH1=0, NPlH3=0, NPlHB=0, NPlHW=0, NPlL1=0, NPlL3=0, NPlQ1=0, NPlQ3=0, NPlebQ=0, NPleH=0, NPleW=0, NPqG=0, NPqH=0, NPquG=0, NPquH=0, NPqW=0, NPuG=0, NPuH=0, NPuW=0

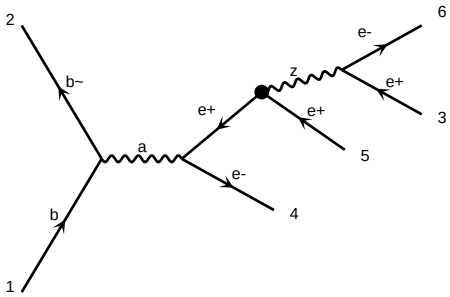

diagram 361 NP=1, NPcG=0, NPcGtil=0, NPcH=0, NPcHB=0, NPcHDD=0, NPcHW=0, NPcHWB=0, NPcW=0, NPcWtil=0, NPdcHW=0, NPdcHWB=0, NPeHDD=0, NPeHWB=0, NPeW=0, NPlHDD=0, NPlHWB=0, NPlW=0, NPqHDD=0, NPqHWB=0, NPqW=0, NPuHDD=0, NPuHWB=0, NPuW=0

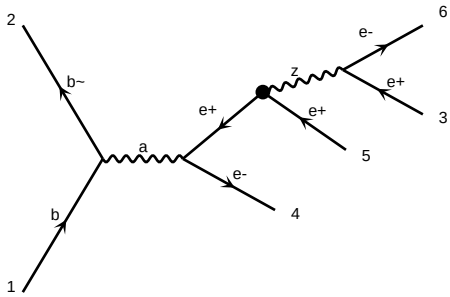

diagram 362 NP=1, NPcG=0, NPcGtil=0, NPcH=0, NPcHB=0, NPcHDD=0, NPcHW=0, NPcHWB=0, NPcW=0, NPcWtil=0, NPdcHW=0, NPdcHWB=0, NPeHDD=0, NPeHWB=0, NPeW=0, NPlHDD=0, NPlHWB=0, NPlW=0, NPqHDD=0, NPqHWB=0, NPqW=0, NPuHDD=0, NPuHWB=0, NPuW=0

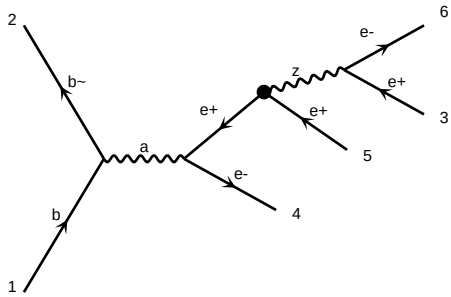

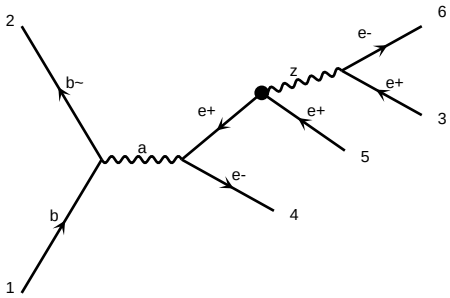

diagram 364 NP=1, NPcG=0, NPcGtil=0, NPcH=0, NPcHB=0, NPcHDD=0, NPcHW=0, NPcHWB=0, NPcW=0, NPcWtil=0, NPdcHW=0, NPdcHWB=0, NPeHDD=0, NPeHWB=0, NPeW=0, NPlHDD=0, NPlHWB=0, NPlW=0, NPqHDD=0, NPqHWB=0, NPqW=0, NPuHDD=0, NPuHWB=0, NPuW=0

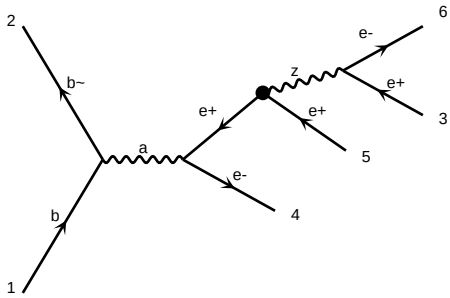

diagram 365 NP=1, NPcG=0, NPcGtil=0, NPcH=0, NPcHB=0, NPcHDD=0, NPcHW=0, NPcHWB=0, NPcW=0, NPcWtil=0, NPdcHW=0, NPdcHWB=0, NPeHDD=0, NPeHWB=0, NPeW=0, NPlHDD=0, NPlHWB=0, NPlW=0, NPqHDD=0, NPqHWB=0, NPqW=0, NPuHDD=0, NPuHWB=0, NPuW=0

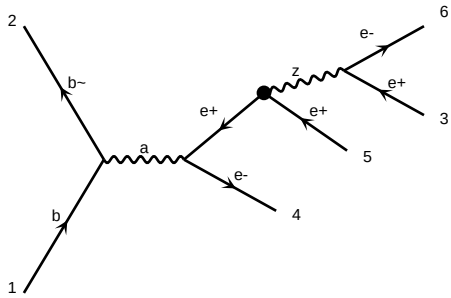

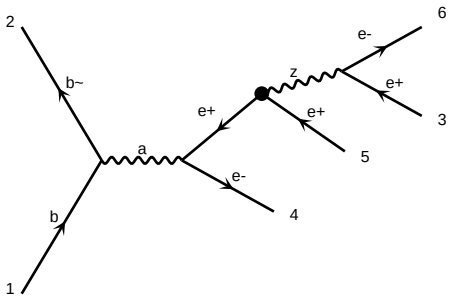

diagram 367 NP=1, NPcG=0, NPcGtil=0, NPcH=0, NPcHB=0, NPcHDD=0, NPcHW=0, NPcHWB=0, NPcW=0, NPcWtil=0, NPdcHW=0, NPdcHWB=0, NPeHDD=0, NPeHWB=0, NPeW=0, NPlHDD=0, NPlHWB=0, NPlW=0, NPqHDD=0, NPqHWB=0, NPqW=0, NPuHDD=0, NPuHWB=0, NPuW=0

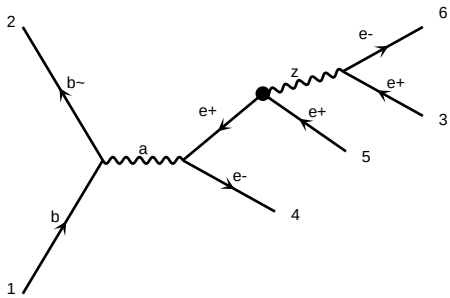

diagram 368 NP=1, NPcG=0, NPcGtil=0, NPcH=0, NPcHB=0, NPcHDD=0, NPcHW=0, NPcHWB=0, NPcW=0, NPcWtil=0, NPdcHW=0, NPdcHWB=0, NPeHDD=0, NPeHWB=0, NPeW=0, NPlHDD=0, NPlHWB=0, NPlW=0, NPqHDD=0, NPqHWB=0, NPqW=0, NPuHDD=0, NPuHWB=0, NPuW=0

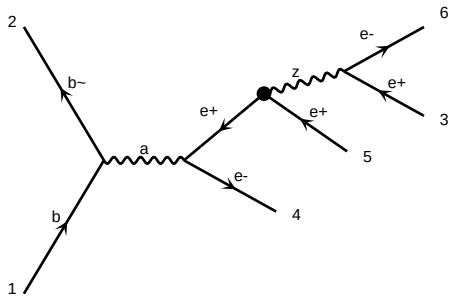

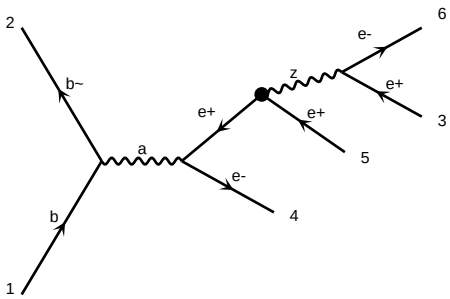

diagram 370 NP=1, NPcG=0, NPcGtil=0, NPcH=0, NPcHB=0, NPcHDD=0, NPcHW=0, NPcHWB=0, NPcW=0, NPcWtil=0, NPdcHW=0, NPdcHWB=0, NPeHDD=0, NPeHWB=0, NPeW=0, NPlHDD=0, NPlHWB=0, NPlW=0, NPqHDD=0, NPqHWB=0, NPqW=0, NPuHDD=0, NPuHWB=0, NPuW=0

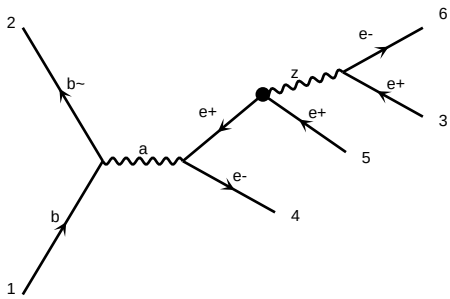

diagram 371 NP=1, NPcG=0, NPcGtil=0, NPcH=0, NPcHB=0, NPcHDD=0, NPcHW=0, NPcHWB=0, NPcW=0, NPcWtil=0, NPdcHW=0, NPdcHWB=0, NPeHDD=0, NPeHWB=0, NPeW=0, NPlHDD=0, NPlHWB=0, NPlW=0, NPqHDD=0, NPqHWB=0, NPqW=0, NPuHDD=0, NPuHWB=0, NPuW=0

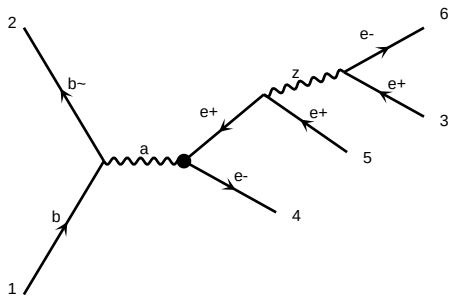

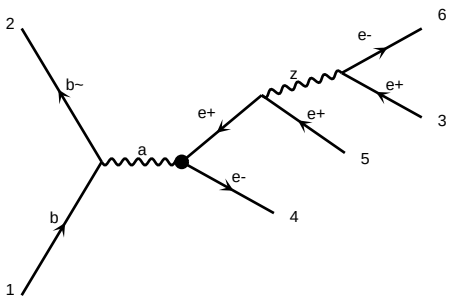

diagram 373 NP=1, NPcG=0, NPcGtil=0, NPcH=0, NPcHB=0, NPcHDD=0, NPcHW=0, NPcHWB=0, NPcW=0, NPcWtil=0, NPdcHW=0, NPdcHWB=0, NPeHDD=0, NPeHWB=0, NPeW=0, NPlHDD=0, NPlHWB=0, NPlW=0, NPqHDD=0, NPqHWB=0, NPqW=0, NPuHDD=0, NPuHWB=0, NPuW=0

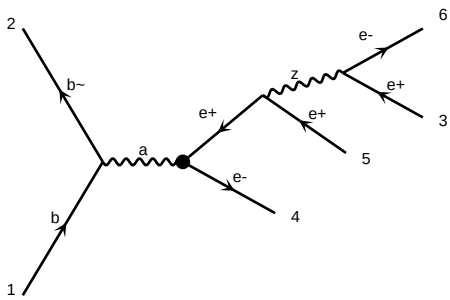

diagram 374 NP=1, NPcG=0, NPcGtil=0, NPcH=0, NPcHB=0, NPcHDD=0, NPcHW=0, NPcHWB=0, NPcW=0, NPcWtil=0, NPdcHW=0, NPdcHWB=0, NPeHDD=0, NPeHWB=0, NPeW=0, NPlHDD=0, NPlHWB=0, NPlW=0, NPqHDD=0, NPqHWB=0, NPqW=0, NPuHDD=0, NPuHWB=0, NPuW=0

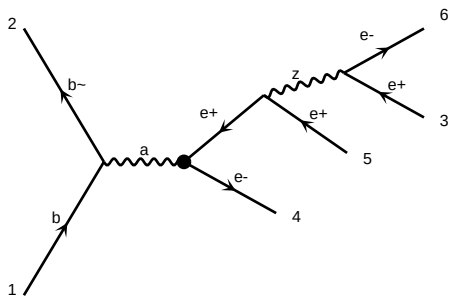

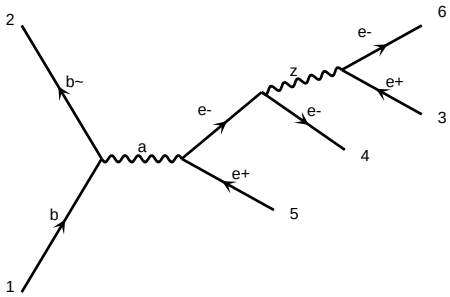

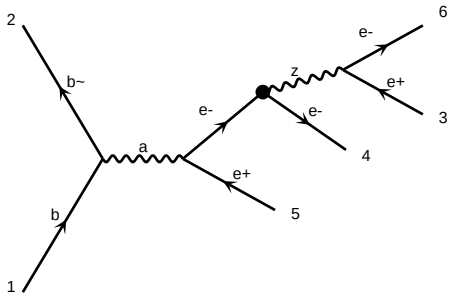

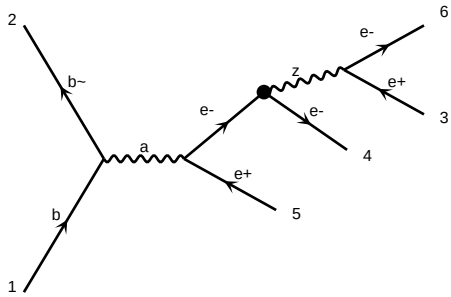

diagram 376 NP=0, NPcG=0, NPcGtil=0, NPcH=0, NPcHB=0, NPcHW=0, NPcHWB=0, NPcHDD=0, NPcHbox=0, NPcW=0, NPeB=0, NPeH=0, NPeW=0, NPll=0, NPlq1=0, NPlq3=0, NPlu=0, NPld=0, NPle=0, NPlequ1=0, NPlequ3=0, NPqq1=0, NPqq3=0, NPqu1=0, NPqd1=0, NPqd8=0, NPquu1=0, NPquu8=0, NPqud1=0, NPqud8=0, NPuu=0, NPud1=0, NPud8=0, NPdd=0, NPlebQ=0, NPleQ=0, NPlu=0, NPld=0, NPqe=0, NPeu=0, NPed=0, NPledq=0, NPlequ1=0, NPlequ3=0, NPquqd1=0, NPquqd8=0, NPlnuQ=0, NPlnudq=0, NPlnuledq=0, NPlnuqu1=0, NPlnuqu3=0, NPlnuqd1=0, NPlnuqd3=0, NPlnule=0, NPlnulu=0, NPlnuld=0, NPlnuqe=0, NPlnueu=0, NPlnued=0, NPlnuledq=0, NPlnuequ1=0, NPlnuequ3=0, NPlnuquqd1=0, NPlnuquqd3=0, NPlnunu=0, NPuG=0, NPuW=0, NPuB=0, NPdG=0, NPdW=0, NPdB=0, NPeG=0, NPeW=0, NPeB=0, NPlnuW=0, NPlnuB=0, NPlnuG=0, NPlnuH=0, NPlnuD

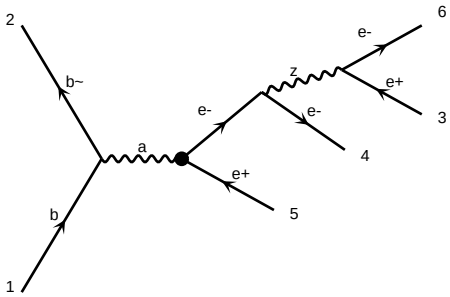

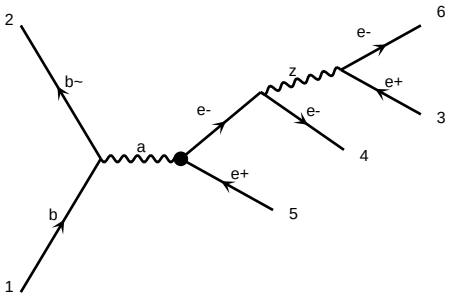

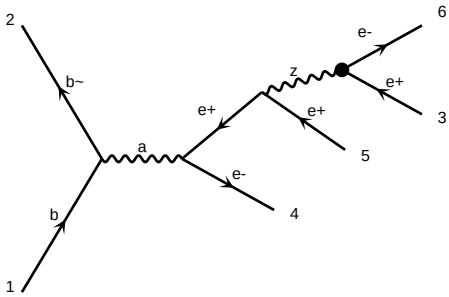

diagram 391 NP=1, NPcG=0, NPcGtil=0, NPcH=0, NPcHB=0, NPcHDD=1, NPcHW=0, NPcHWB=0, NPcW=0, NPeHB=0, NPeW=0, NPlB=0, NPlH=0, NPlHD=0, NPlW=0, NPqB=0, NPqG=0, NPqH=0, NPqHD=0, NPqW=0, NPuB=0, NPuG=0, NPuH=0, NPuW=0

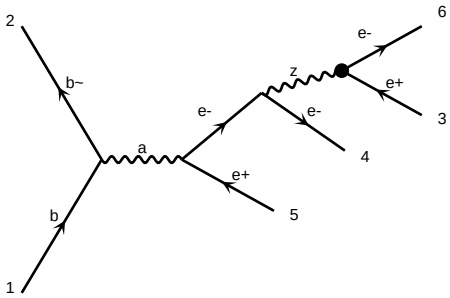

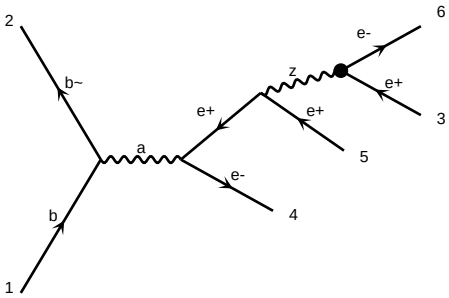

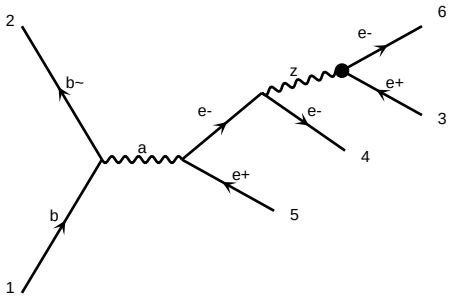

diagram 394 NP=1, NPcG=0, NPcGtil=0, NPcH=0, NPcHB=0, NPcHDD=1, NPcHW=0, NPcHWB=0, NPcW=0, NPeHB=0, NPeW=0, NPlB=0, NPlH=0, NPlHD=0, NPlW=0, NPqB=0, NPqG=0, NPqH=0, NPqHD=0, NPqW=0, NPuB=0, NPuG=0, NPuH=0, NPuW=0

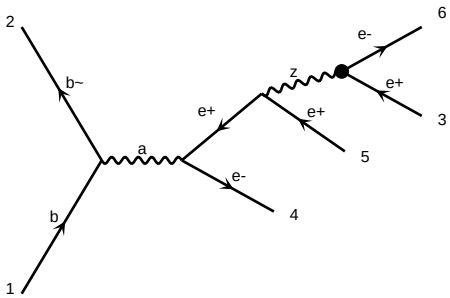

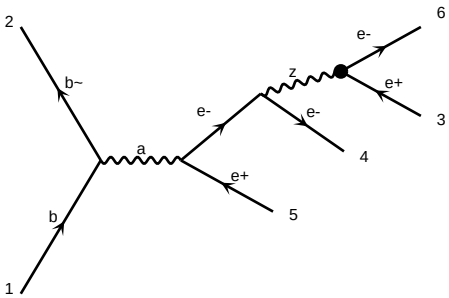

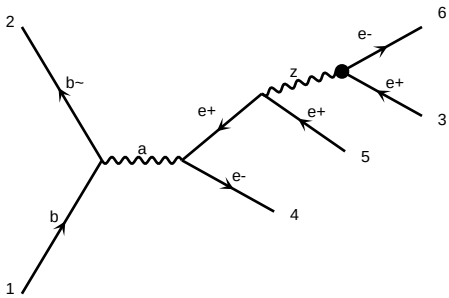

diagram 397 NP=1, NPcG=0, NPcGtil=0, NPcH=0, NPcHB=0, NPcHDD=1, NPcHW=0, NPcHWB=0, NPcW=0, NPeHB=0, NPeW=0, NPlB=0, NPlH=0, NPlHD=0, NPlW=0, NPqB=0, NPqG=0, NPqH=0, NPqHD=0, NPqW=0, NPuB=0, NPuG=0, NPuH=0, NPuW=0

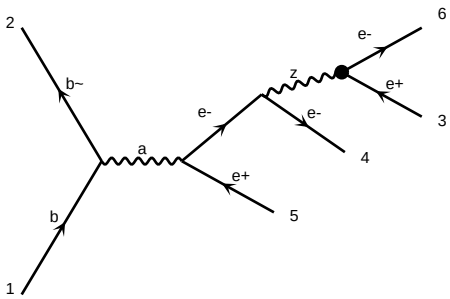

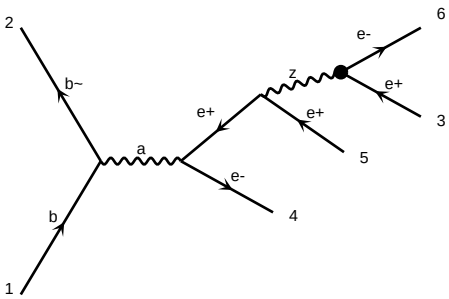

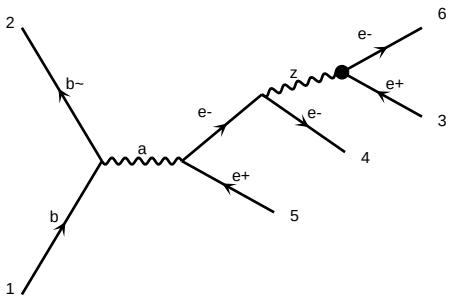

diagram 400 NP=1, NPcG=0, NPcGtil=0, NPcH=0, NPcHB=0, NPcHDD=1, NPcHW=0, NPcHWB=0, NPcW=0, NPeHB=0, NPeW=0, NPlB=0, NPlH=0, NPlHD=0, NPlW=0, NPqB=0, NPqG=0, NPqH=0, NPqHD=0, NPqW=0, NPuB=0, NPuG=0, NPuH=0, NPuW=0

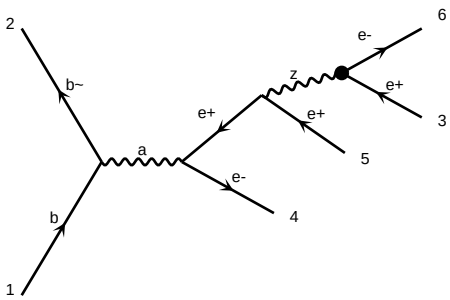

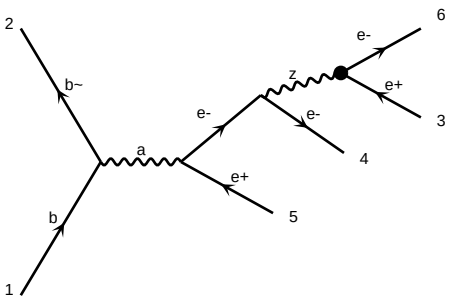

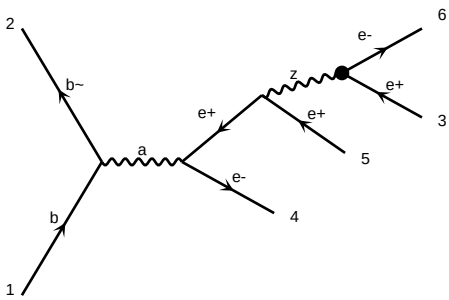

diagram 403 NP=1, NPcG=0, NPcGtil=0, NPcH=0, NPcHB=0, NPcHDD=1, NPcHW=0, NPcHWB=0, NPcW=0, NPeHB=0, NPeW=0, NPlB=0, NPlH=0, NPlHD=0, NPlW=0, NPqB=0, NPqG=0, NPqH=0, NPqHD=0, NPqW=0, NPuB=0, NPuG=0, NPuH=0, NPuW=0

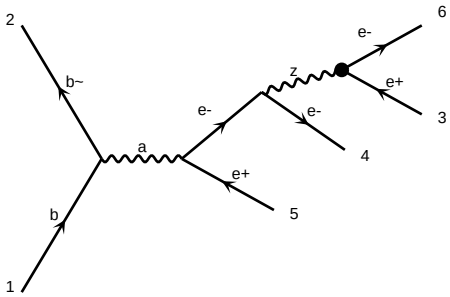

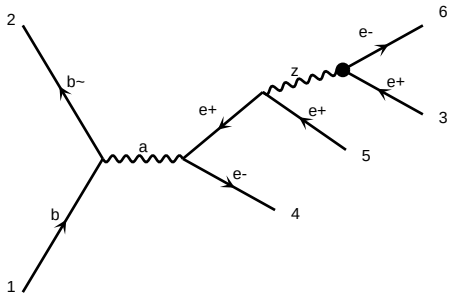

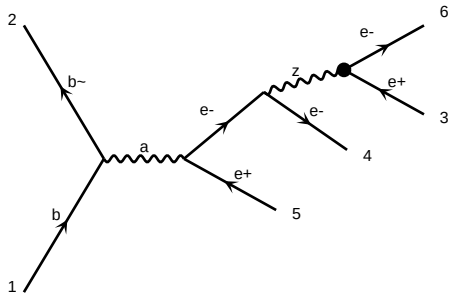

diagram 406 NP=1, NPcG=0, NPcGtil=0, NPcH=0, NPcHB=0, NPcHW=0, NPcHWB=0, NPcW=0, NPcWtil=0, NPdcHW=0, NPdcHWB=0, NPeHB=0, NPeHW=0, NPeW=0, NPlHB=0, NPlHW=0, NPlW=0, NPqHB=0, NPqHW=0, NPqW=0, NPuHB=0, NPuHW=0, NPuW=0

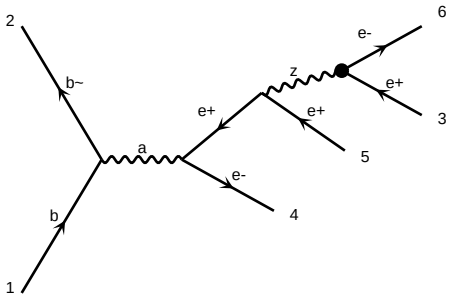

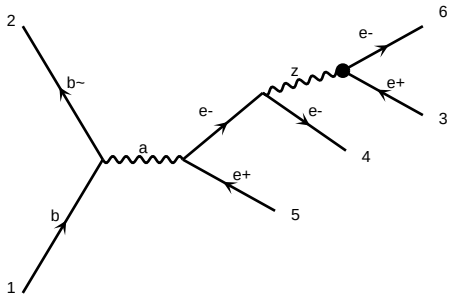

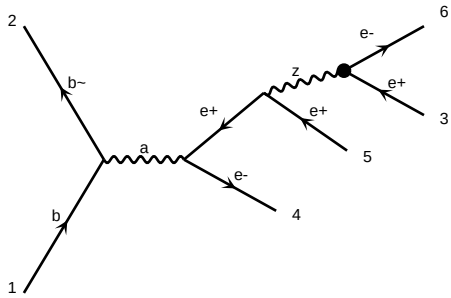

diagram 409 NP=1, NPcG=0, NPcGtil=0, NPcH=0, NPcHB=0, NPcHW=0, NPcHWB=0, NPcW=0, NPcWtil=0, NPdcHW=0, NPdcHWB=0, NPeHB=0, NPeHW=0, NPeW=0, NPlHB=0, NPlHW=0, NPlW=0, NPqHB=0, NPqHW=0, NPqW=0, NPuHB=0, NPuHW=0, NPuW=0

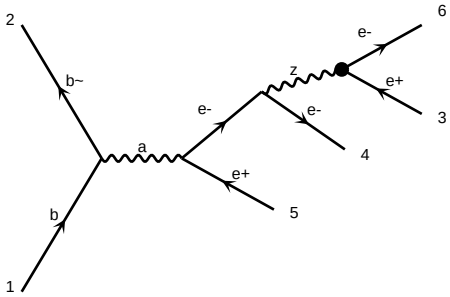

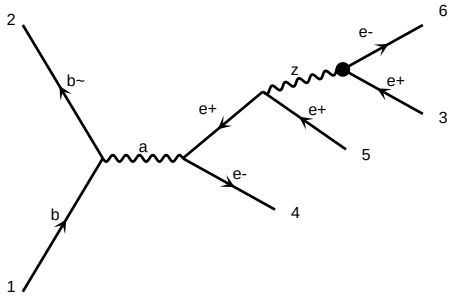

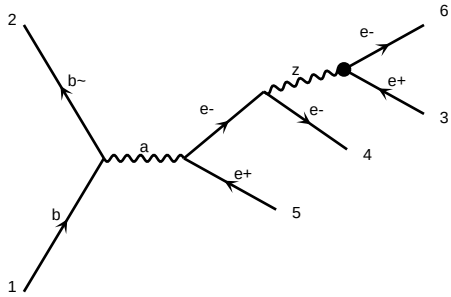

diagram 412 NP=1, NPcG=0, NPcGtil=0, NPcH=0, NPcHB=0, NPcHW=0, NPcHWB=0, NPcW=0, NPcWtil=0, NPdcHW=0, NPdcHWB=0, NPeHB=0, NPeHW=0, NPeW=0, NPlHB=0, NPlHW=0, NPlW=0, NPqHB=0, NPqHW=0, NPqW=0, NPuHB=0, NPuHW=0, NPuW=0

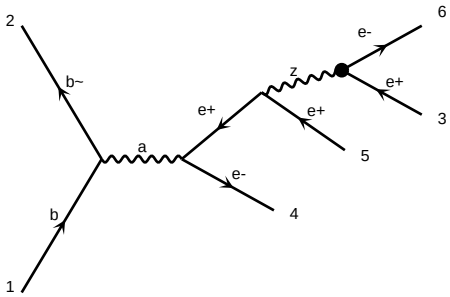

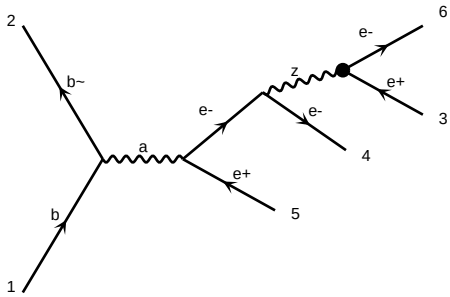

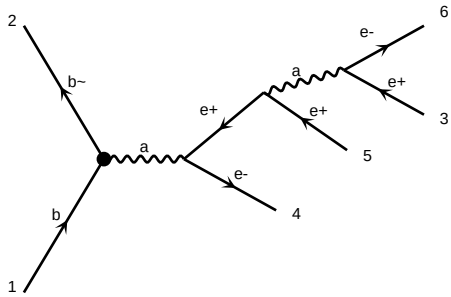

diagram 415 NP=1, NPcG=0, NPcGtil=0, NPcH=0, NPcHB=0, NPcHW=0, NPcHWB=0, NPcW=0, NPcWtil=0, NPdcHW=0, NPdcHWB=0, NPeHB=0, NPeHW=0, NPeW=0, NPlHB=0, NPlHW=0, NPlW=0, NPqHB=0, NPqHW=0, NPqW=0, NPuHB=0, NPuHW=0, NPuW=0

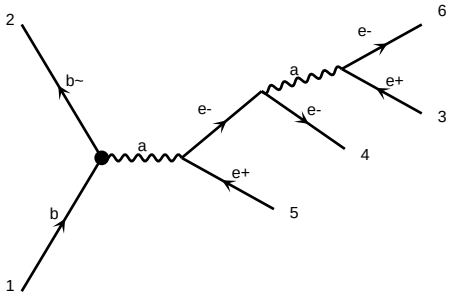

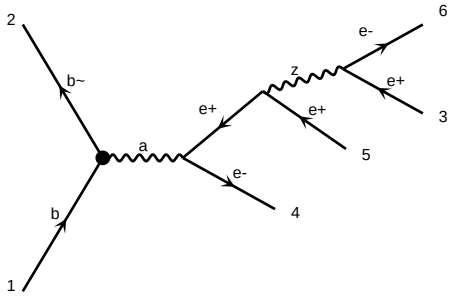

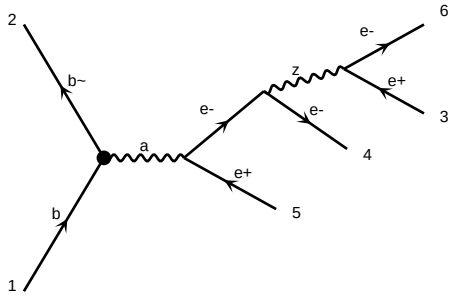

diagram 418 NP=1, NPcG=0, NPcGtil=0, NPcH=0, NPcHB=0, NPcHW=0, NPcHWB=0, NPcW=0, NPcWtil=0, NPdcHW=0, NPdcHWB=0, NPeHB=0, NPeHW=0, NPeW=0, NPlHB=0, NPlHW=0, NPlW=0, NPqHB=0, NPqHW=0, NPqW=0, NPuHB=0, NPuHW=0, NPuW=0

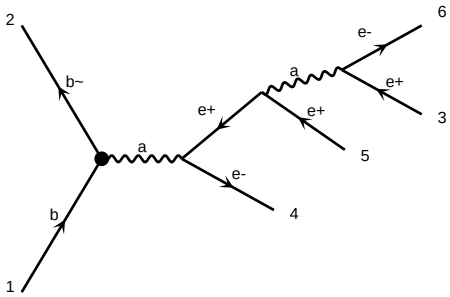

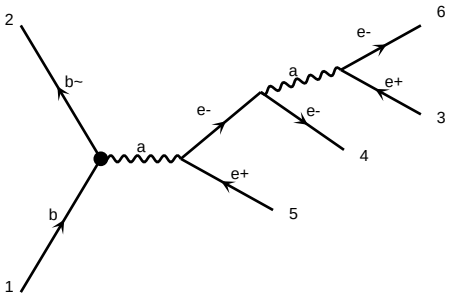

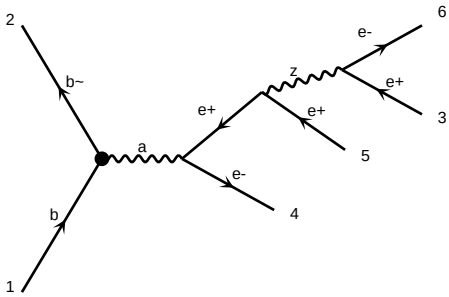

diagram 421 NP=1, NPcG=0, NPcGtil=0, NPcH=0, NPcHB=0, NPcHW=0, NPcHWB=0, NPcHDD=0, NPcHbox=0, NPcW=0, NPcWtil=0, NPcll=0, NPcqq1=0, NPcqq3=0, NPcqq11=0, NPcqq31=0, NPcqq13=0, NPcqq33=0, NPclq1=0, NPclq3=0, NPcee=0, NPcuu=0, NPcuu1=0, NPcdd=0, NPcdd1=0, NPceu=0, NPced=0, NPcud1=0, NPcud8=0, NPcle=0, NPclu=0, NPcld=0, NPcqe=0, NPcqu1=0, NPcqu8=0, NPcqd1=0, NPcqd8=0, NPclebQ=0, NPcquqd1=0, NPcquqd8=0, NPclequ1=0, NPclequ3=0, NPcledq=0, NPcHl1=0, NPcHl3=0, NPcHe=0, NPcHu=0, NPcHd=0, NPcHud=0, NPcHQ1=0, NPcHQ3=0, NPcHL1=0, NPcHL3=0, NPcHeu=0, NPcHed=0, NPcHbq=0, NPcHW=0, NPcHWtil=0, NPcHB=0, NPcHBtil=0, NPcHWB=0, NPcHWBtil=0, NPcHDD=0, NPcHbox=0, NPcW=0, NPcWtil=0, NPcll=0, NPcqq1=0, NPcqq3=0, NPcqq11=0, NPcqq31=0, NPcqq13=0, NPcqq33=0, NPclq1=0, NPcl

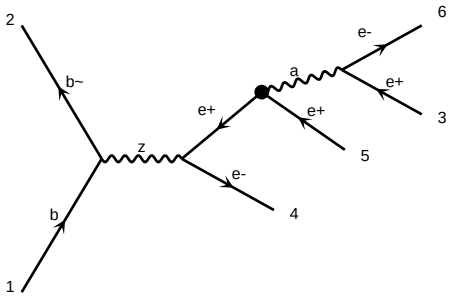

diagram 436 NP=1, NPcG=0, NPcGtil=0, NPcH=0, NPcHB=0, NPcHDD=0, NPcHW=0, NPcHWB=0, NPcW=0, NPcWtil=0, NPlB=0, NPlBtil=0, NPlH1=0, NPlH2=0, NPlHB=0, NPlHW=0, NPlL1=0, NPlL2=0, NPlQ1=0, NPlQ3=0, NPlW=0, NPlWtil=0, NPqB=0, NPqBtil=0, NPqH=0, NPqHB=0, NPqHW=0, NPqQ1=0, NPqQ3=0, NPqW=0, NPqWtil=0, NPuB=0, NPuBtil=0, NPuH=0, NPuHB=0, NPuHW=0, NPuQ1=0, NPuQ3=0, NPuW=0, NPuWtil=0, NPdB=0, NPdBtil=0, NPdH=0, NPdHB=0, NPdHW=0, NPdQ1=0, NPdQ3=0, NPdW=0, NPdWtil=0, NPeB=0, NPeBtil=0, NPeH=0, NPeHB=0, NPeHW=0, NPeL1=0, NPeL2=0, NPeW=0, NPeWtil=0, NPlebQ3=0, NPlequ1=0, NPlequ3=0, NPquqd1=0, NPquqd8=0, NPlu=0, NPld=0, NPle=0, NPqu=0, NPqd=0, NPqe=0, NPlebQ=0, NPluQ=0, NPldQ=0, NPleQ=0, NPeu=0, NPed=0, NPlu1=0, NPld1=0, NPle1=0, NPqu1=0, NPqd1=0, NPqe1=0, NPeu1=0, NPed1=0, NPlu8=0, NPld8=0, NPle8=0, NPqu8=0, NPqd8=0, NPqe8=0, NPeu8=0, NPed8=0, NPlQ=0, NPeQ=0, NPlQ1=0, NPeQ1=0, NPlQ8=0, NPeQ8=0, NPuu=0, NPdd=0, NPud1=0, NPud8=0, NPuu1=0, NPdd1=0, NPuu8=0, NPdd8=0, NPQQ1=0, NPQQ8=0, NPQQ11=0, NPQQ18=0, NPQu1=0, NPQu8=0, NPQd1=0, NPQd8=0, NPQu11=0, NPQu18=0, NPQd11=0, NPQd18=0, NPQe=0, NPQe1=0, NPQe8=0, NPQe11=0, NPQe18=0, NPuQ1=0, NPuQ8=0, NPdQ1=0, NPdQ8=0, NPeu=0, NPed=0, NPeu1=0, NPed1=0, NPeu8=0, NPed8=0, NPlu=0, NPld=0, NPle=0, NPlu1=0, NPld1=0, NPle1=0, NPlu8=0, NPld8=0, NPle8=0, NPQu=0, NPQd=0, NPQe=0, NPQu1=0, NPQd1=0, NPQe1=0, NPQu8=0, NPQd8=0, NPQe8=0, NPuu=0, NPdd=0, NPud1=0, NPud8=0, NPuu1=0, NPdd1=0, NPuu8=0, NPdd8=0, NPQQ1=0, NPQQ8=0, NPQQ11=0, NPQQ18=0, NPlQ=0, NPlQ1=0, NPlQ8=0, NPuQ1=0, NPuQ8=0, NPdQ1=0, NPdQ8

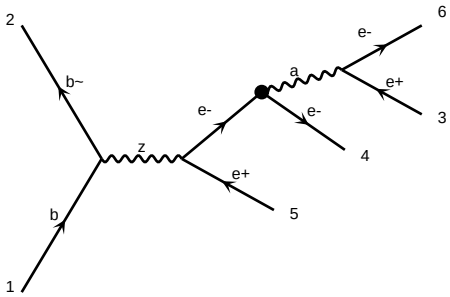

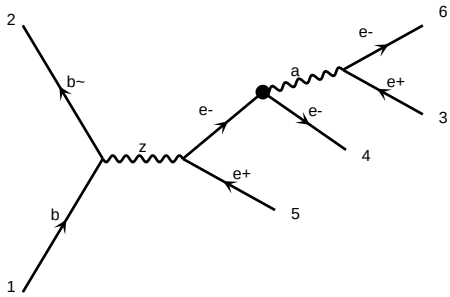

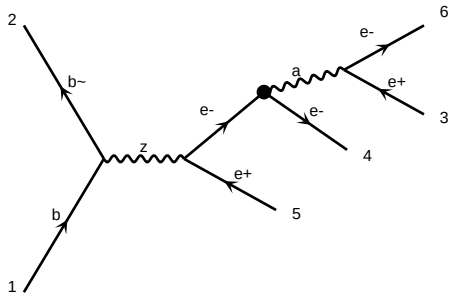

diagram 451 NP=1, NPcG=0, NPcGtil=0, NPcH=0, NPcHB=0, NPcHDD=1, NPcHW=0, NPcHWB=0, NPcW=0, NPeHB=0, NPeHW=0, NPeW=0, NPlB=0, NPlH=0, NPlHD=0, NPlHW=0, NPlW=0, NPqB=0, NPqG=0, NPqH=0, NPqHB=0, NPqHW=0, NPqW=0, NPuB=0, NPuG=0, NPuH=0, NPuW=0

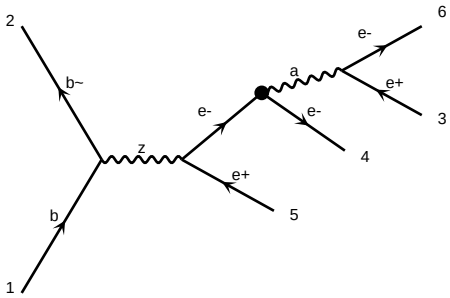

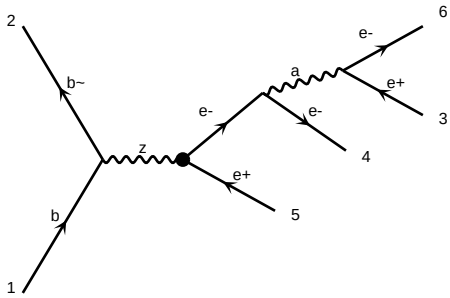

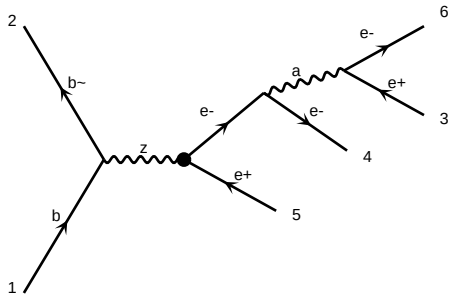

diagram 454 NP=1, NPcG=0, NPcGtil=0, NPcH=0, NPcHB=0, NPcHDD=1, NPcHW=0, NPcHWB=0, NPcW=0, NPeHB=0, NPeHW=0, NPeW=0, NPlB=0, NPlH=0, NPlHD=0, NPlHW=0, NPlW=0, NPqB=0, NPqG=0, NPqH=0, NPqHB=0, NPqHW=0, NPqW=0, NPuB=0, NPuG=0, NPuH=0, NPuW=0

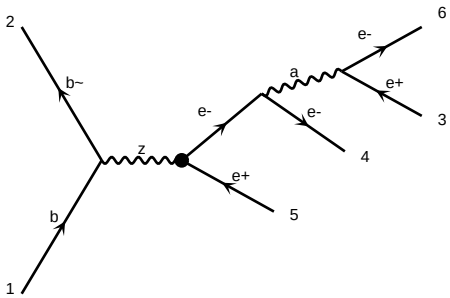

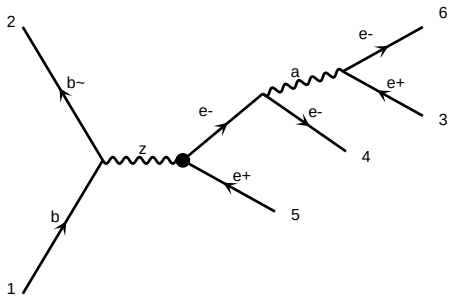

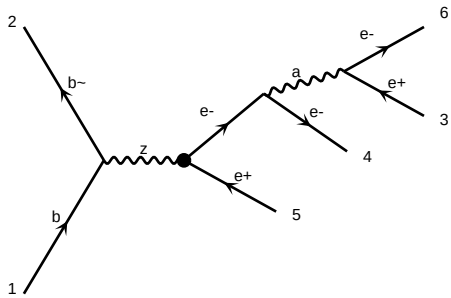

diagram 457 NP=1, NPcG=0, NPcGtil=0, NPcH=0, NPcHB=0, NPcHDD=1, NPcHW=0, NPcHWB=0, NPcW=0, NPeHB=0, NPeHW=0, NPeW=0, NPlB=0, NPlH=0, NPlHD=0, NPlHW=0, NPlW=0, NPqB=0, NPqG=0, NPqH=0, NPqHB=0, NPqHW=0, NPqW=0, NPuB=0, NPuG=0, NPuH=0, NPuW=0

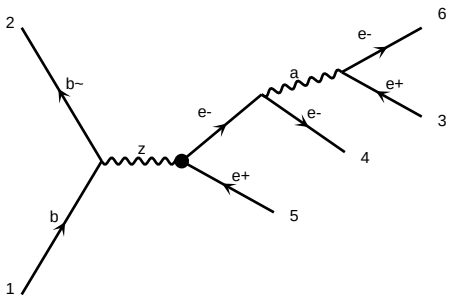

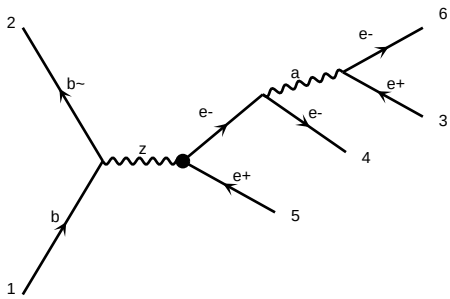

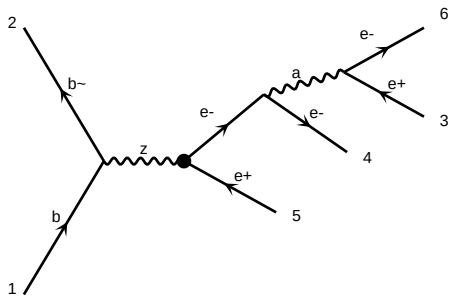

diagram 460 NP=1, NPcG=0, NPcGtil=0, NPcH=0, NPcHB=0, NPcHDD=1, NPcHW=0, NPcHWB=0, NPcW=0, NPeHB=0, NPeHW=0, NPeW=0, NPlB=0, NPlH=0, NPlHD=0, NPlHW=0, NPlW=0, NPqB=0, NPqG=0, NPqH=0, NPqHB=0, NPqHW=0, NPqW=0, NPuB=0, NPuG=0, NPuH=0, NPuW=0

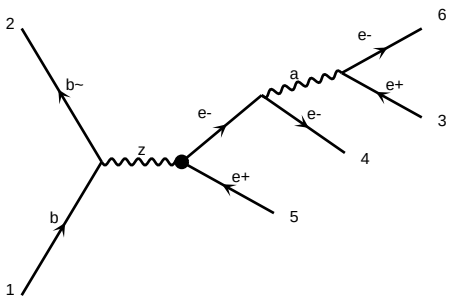

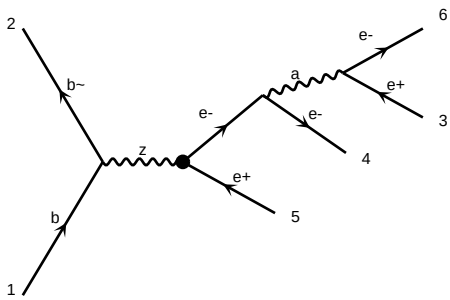

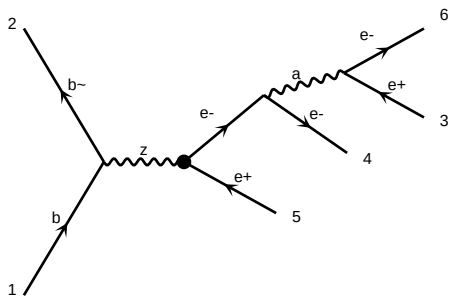

diagram 463 NP=1, NPcG=0, NPcGtil=0, NPcH=0, NPcHB=0, NPcHDD=1, NPcHW=0, NPcHWB=0, NPcW=0, NPeHB=0, NPeHW=0, NPeW=0, NPlB=0, NPlH=0, NPlHD=0, NPlHW=0, NPlW=0, NPqB=0, NPqG=0, NPqH=0, NPqHB=0, NPqHW=0, NPqW=0, NPuB=0, NPuG=0, NPuH=0, NPuW=0

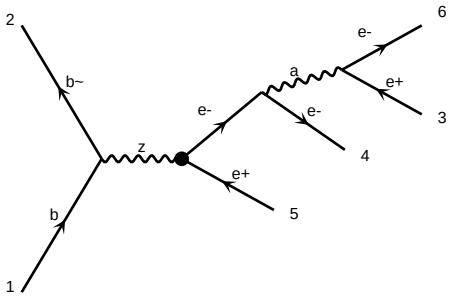

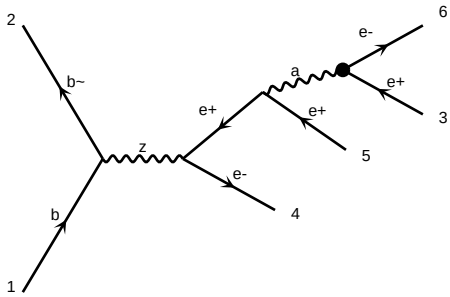

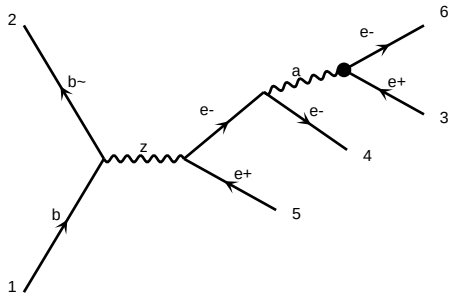

diagram 466 NP=1, NPcG=0, NPcGtil=0, NPcH=0, NPcHB=0, NPcHDD=0, NPcHW=0, NPcHWB=0, NPcW=0, NPlB=0, NPlH=0, NPlHD=0, NPlHe=0, NPlHl=0, NPlHq=0, NPlHu=0, NPlW=0, NPlWB=0, NPlWH=0, NPlWW=0, NPlWe=0, NPlWl=0, NPlWq=0, NPlWu

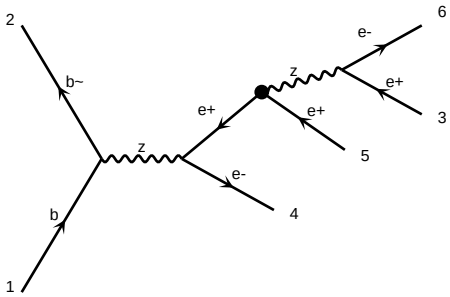

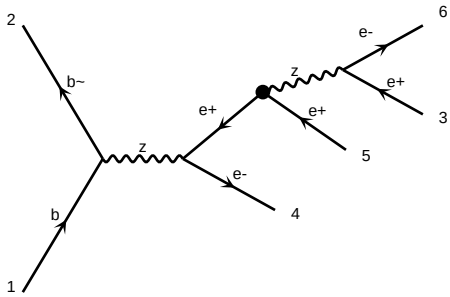

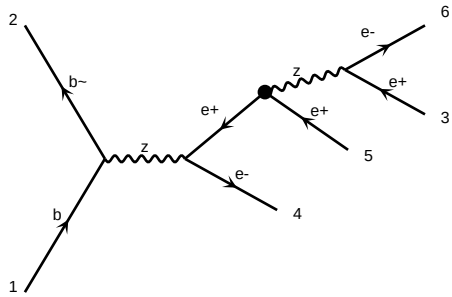

diagram 481 NP=1, NPcG=0, NPcGtil=0, NPcH=0, NPcHB=0, NPcHDD=1, NPcHW=0, NPcHWB=0, NPcW=0, NPeHB=0, NPeHW=0, NPeW=0, NPlB=0, NPlH=0, NPlHD=0, NPlW=0, NPqB=0, NPqG=0, NPqH=0, NPqW=0, NPuB=0, NPuG=0, NPuH=0, NPuW=0

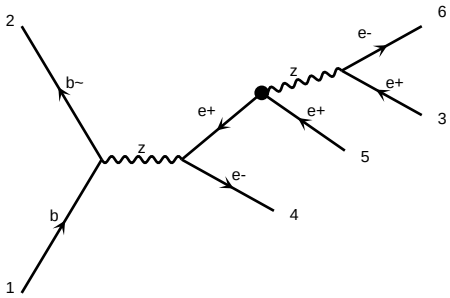

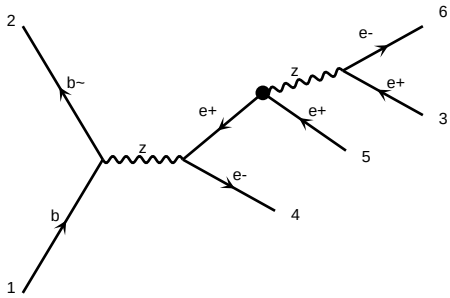

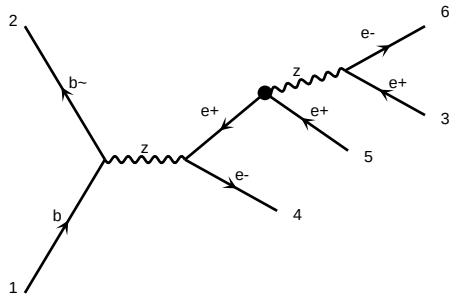

diagram 484 NP=1, NPcG=0, NPcGtil=0, NPcH=0, NPcHB=0, NPcHDD=1, NPcHW=0, NPcHWB=0, NPcW=0, NPeHB=0, NPeHW=0, NPeW=0, NPlB=0, NPlH=0, NPlHD=0, NPlW=0, NPqB=0, NPqG=0, NPqH=0, NPqW=0, NPuB=0, NPuG=0, NPuH=0, NPuW=0

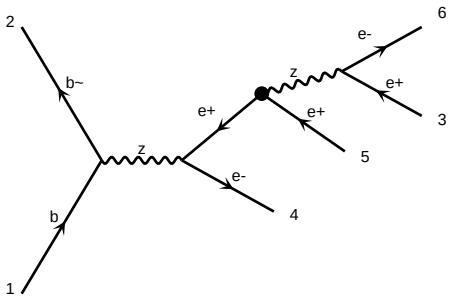

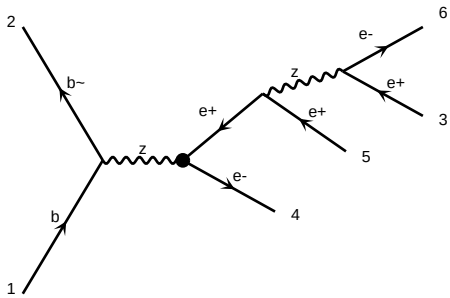

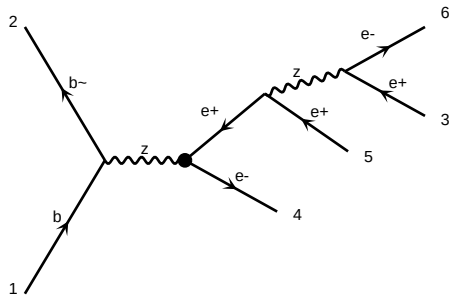

diagram 487 NP=1, NPcG=0, NPcGtil=0, NPcH=0, NPcHB=0, NPcHDD=1, NPcHW=0, NPcHWB=0, NPcW=0, NPeHB=0, NPeHW=0, NPeW=0, NPlB=0, NPlH=0, NPlHD=0, NPlW=0, NPqB=0, NPqG=0, NPqH=0, NPqW=0, NPuB=0, NPuG=0, NPuH=0, NPuW=0

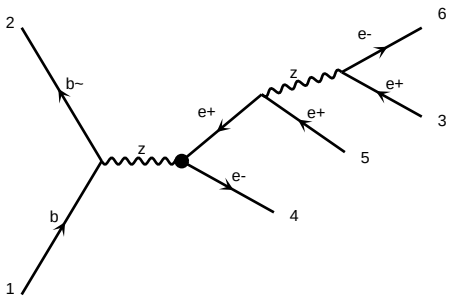

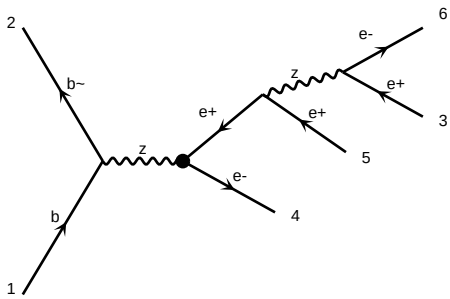

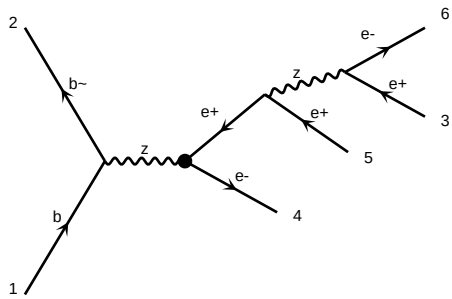

diagram 490 NP=1, NPcG=0, NPcGtil=0, NPcH=0, NPcHB=0, NPcHDD=1, NPcHW=0, NPcHWB=0, NPcW=0, NPeHB=0, NPeHW=0, NPeW=0, NPlB=0, NPlH=0, NPlHD=0, NPlW=0, NPqB=0, NPqG=0, NPqH=0, NPqW=0, NPuB=0, NPuG=0, NPuH=0, NPuW=0

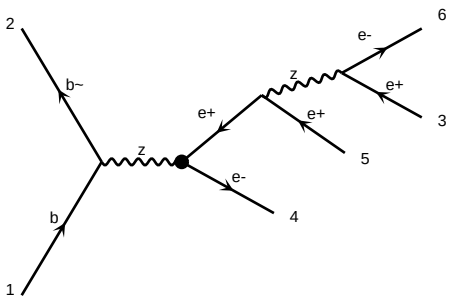

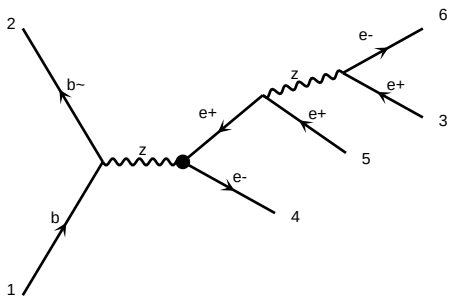

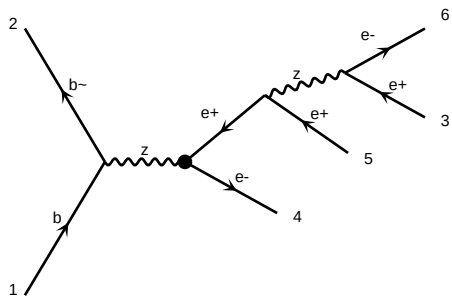

diagram 493 NP=1, NPcG=0, NPcGtil=0, NPcH=0, NPcHB=0, NPcHDD=1, NPcHW=0, NPcHWB=0, NPcW=0, NPeHB=0, NPeHW=0, NPeW=0, NPlB=0, NPlH=0, NPlHD=0, NPlW=0, NPqB=0, NPqG=0, NPqH=0, NPqW=0, NPuB=0, NPuG=0, NPuH=0, NPuW=0

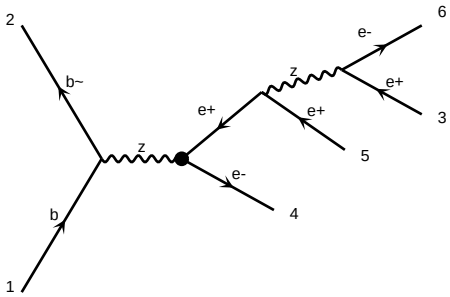

diagram 496 NP=1, NPcG=0, NPcGtil=0, NPcH=0, NPcHB=0, NPcHW=0, NPcHWB=0, NPcW=0, NPcWtil=0, NPdcHB=0, NPdcHW=0, NPeHB=0, NPeHW=0, NPeW=0, NPlH1=0, NPlH2=0, NPlHB=0, NPlHW=0, NPlebQ3=0, NPlebQ=0, NPlebQtil=0, NPlelb=0, NPlelq1=0, NPlelq3=0, NPlelq=0, NPleu=0, NPlH=0, NPlHDD=0, NPlHe=0, NPlHl1=0, NPlHl3=0, NPlHq1=0, NPlHq3=0, NPlHu=0, NPlu=0, NPqe=0, NPqu1=0, NPqu8=0, NPuG=0, NPuH=0, NPuW=0, QED=4, QNP=2, WEIGHTED=6

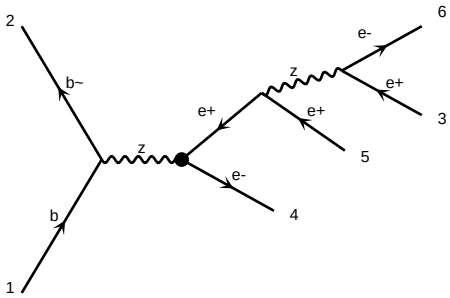

diagram 499 NP=1, NPcG=0, NPcGtil=0, NPcH=0, NPcHB=0, NPcHW=0, NPcHWB=0, NPcW=0, NPcWtil=0, NPdcHB=0, NPdcHW=0, NPeHB=0, NPeHW=0, NPeW=0, NPlH1=0, NPlH2=0, NPlHB=0, NPlHW=0, NPlebQ3=0, NPlebQ=0, NPlebQtil=0, NPlelb=0, NPlelq1=0, NPlelq3=0, NPlelq=0, NPleu=0, NPlH=0, NPlHDD=0, NPlHe=0, NPlHl1=0, NPlHl3=0, NPlHq1=0, NPlHq3=0, NPlHu=0, NPlu=0, NPqe=0, NPqu1=0, NPqu8=0, NPuG=0, NPuH=0, NPuW=0, QED=4, QNP=2, WEIGHTED=6

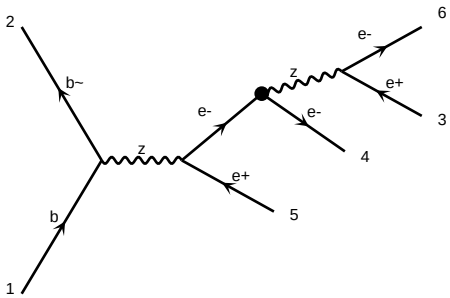

diagram 502 NP=1, NPcG=0, NPcGtil=0, NPcH=0, NPcHB=0, NPcHW=0, NPcHWB=0, NPcW=0, NPcWtil=0, NPdcHB=0, NPdcHW=0, NPeHB=0, NPeHW=0, NPeW=0, NPlH1=0, NPlH2=0, NPlHB=0, NPlHW=0, NPlebQ3=0, NPlebQ=0, NPlebQtil=0, NPlelb=0, NPlelq1=0, NPlelq3=0, NPlelq=0, NPleu=0, NPlH=0, NPlHDD=0, NPlHe=0, NPlHl1=0, NPlHl3=0, NPlHq1=0, NPlHq3=0, NPlHu=0, NPlu=0, NPqe=0, NPqu1=0, NPqu8=0, NPuG=0, NPuH=0, NPuW=0, QED=4, QNP=2, WEIGHTED=6

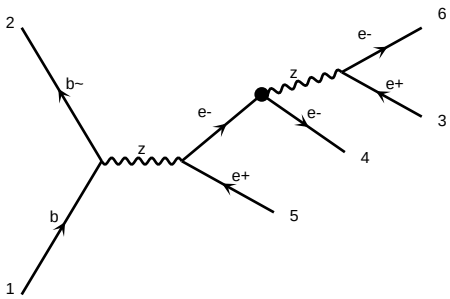

diagram 505 NP=1, NPcG=0, NPcGtil=0, NPcH=0, NPcHB=0, NPcHW=0, NPcHWB=0, NPcW=0, NPcWtil=0, NPdcHB=0, NPdcHW=0, NPeHB=0, NPeHW=0, NPeW=0, NPlH1=0, NPlH2=0, NPlHB=0, NPlHW=0, NPlebQ3=0, NPlebQ=0, NPlebQtil=0, NPlelb=0, NPlelq1=0, NPlelq3=0, NPlelq=0, NPleu=0, NPlH=0, NPlHDD=0, NPlHe=0, NPlHl1=0, NPlHl3=0, NPlHq1=0, NPlHq3=0, NPlHu=0, NPlu=0, NPqe=0, NPqu1=0, NPqu8=0, NPuG=0, NPuH=0, NPuW=0, QED=4, QNP=2, WEIGHTED=6

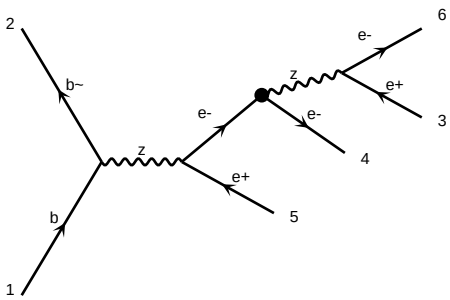

diagram 508 NP=1, NPcG=0, NPcGtil=0, NPcH=0, NPcHB=0, NPcHW=0, NPcHWB=0, NPcW=0, NPcWtil=0, NPdcHB=0, NPdcHW=0, NPeHB=0, NPeHW=0, NPeW=0, NPlH1=0, NPlH2=0, NPlHB=0, NPlHW=0, NPlebQ3=0, NPlebQ=0, NPlebQtil=0, NPlelb=0, NPlelq1=0, NPlelq3=0, NPlelq=0, NPleu=0, NPlH=0, NPlHDD=0, NPlHe=0, NPlHl1=0, NPlHl3=0, NPlHq1=0, NPlHq3=0, NPlHu=0, NPlu=0, NPqe=0, NPqu1=0, NPqu8=0, NPuG=0, NPuH=0, NPuW=0, QED=4, QNP=2, WEIGHTED=6

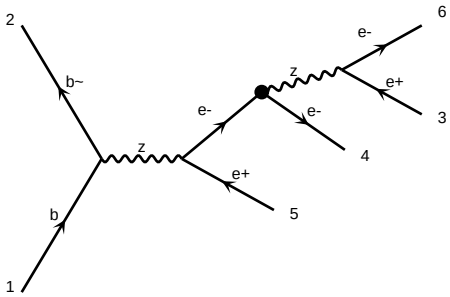

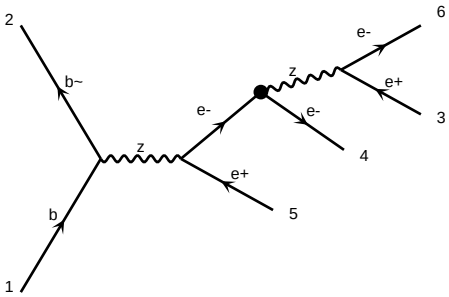

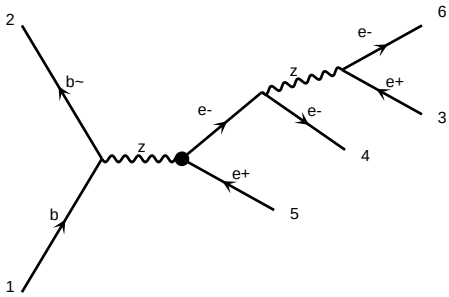

diagram 511 NP=1, NPcG=0, NPcGtil=0, NPcH=0, NPcHB=0, NPcHDD=0, NPcHW=0, NPcHWB=0, NPcW=0, NPeHB=0, NPeW=0, NPlH1=0, NPlH3=0, NPlHe=0, NPlHl=0, NPlHq1=0, NPlHq3=0, NPlHu=0, NPlebH=0, NPleH=0, NPlqH1=0, NPlqH3=0, NPluH=0, NPqHd=0, NPqHu=0, NPuHd=0, NPuHu=0

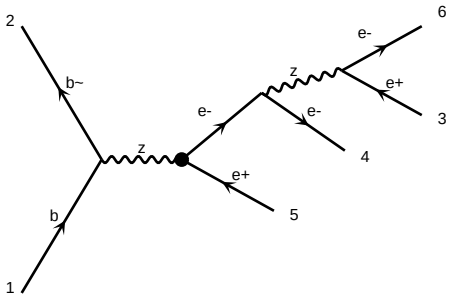

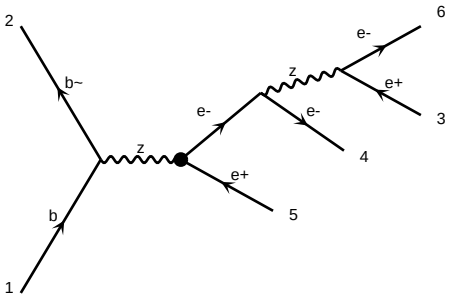

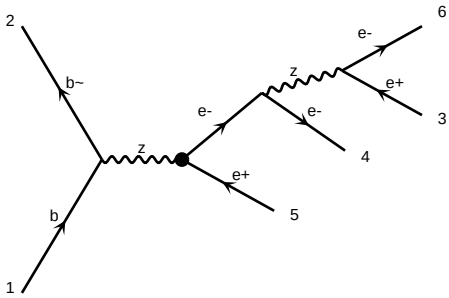

diagram 514 NP=1, NPcG=0, NPcGtil=0, NPcH=0, NPcHB=0, NPcHDD=0, NPcHW=0, NPcHWB=0, NPcW=0, NPeHB=0, NPeW=0, NPlH1=0, NPlH3=0, NPlHe=0, NPlHl=0, NPlHq1=0, NPlHq3=0, NPlHu=0, NPlebH=0, NPleH=0, NPlqH1=0, NPlqH3=0, NPluH=0, NPqHd=0, NPqHu=0, NPuHd=0, NPuHu=0

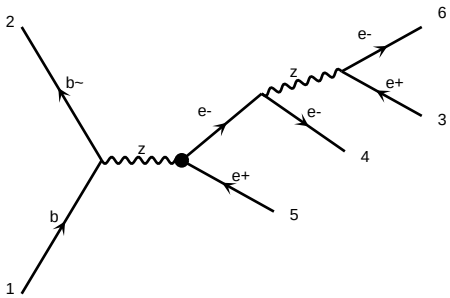

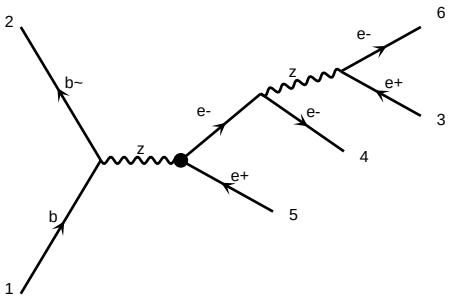

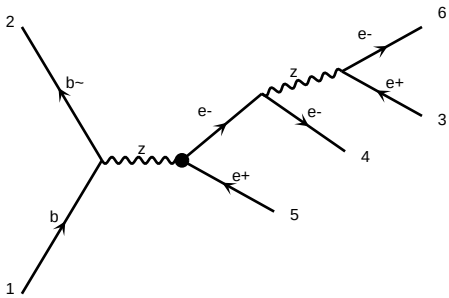

diagram 517 NP=1, NPcG=0, NPcGtil=0, NPcH=0, NPcHB=0, NPcHDD=0, NPcHW=0, NPcHWB=0, NPcW=0, NPeHB=0, NPeW=0, NPlH1=0, NPlH3=0, NPlHe=0, NPlHl=0, NPlHq1=0, NPlHq3=0, NPlHu=0, NPlebH=0, NPleH=0, NPlqH1=0, NPlqH3=0, NPluH=0, NPqHd=0, NPqHu=0, NPuHd=0, NPuHu=0

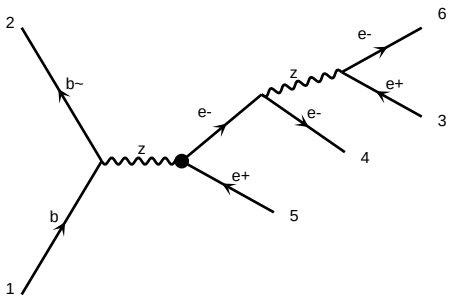

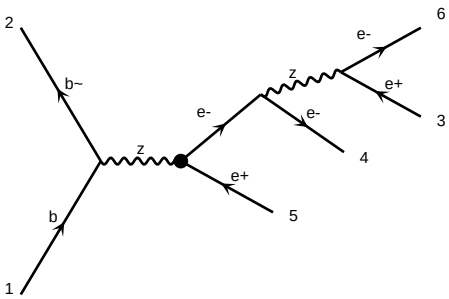

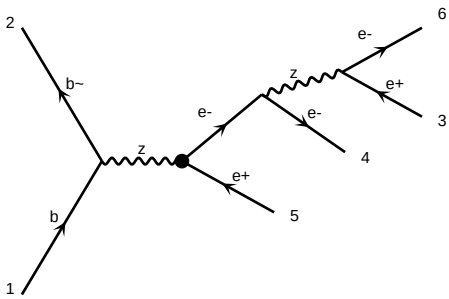

diagram 520 NP=1, NPcG=0, NPcGtil=0, NPcH=0, NPcHB=0, NPcHDD=0, NPcHW=0, NPcHWB=0, NPcW=0, NPeHB=0, NPeW=0, NPlH1=0, NPlH3=0, NPlHe=0, NPlHl=0, NPlHq1=0, NPlHq3=0, NPlHu=0, NPlebH=0, NPleH=0, NPlqH1=0, NPlqH3=0, NPluH=0, NPqHd=0, NPqHu=0, NPuHd=0, NPuHu=0

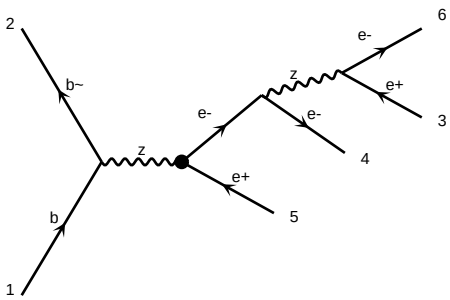

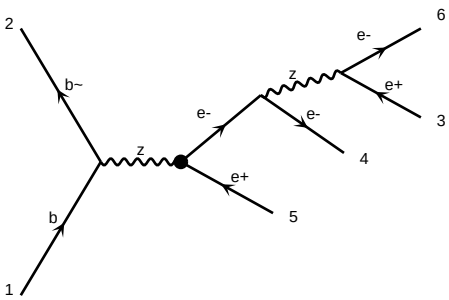

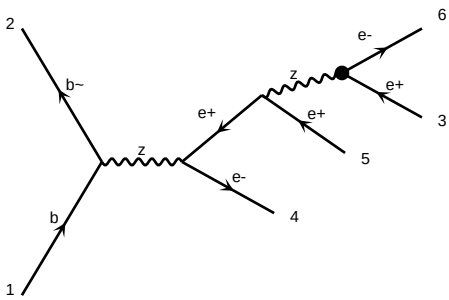

diagram 523 NP=1, NPcG=0, NPcGtil=0, NPcH=0, NPcHB=0, NPcHDD=0, NPcHW=0, NPcHWB=0, NPcW=0, NPeHB=0, NPeW=0, NPlH1=0, NPlH3=0, NPlHe=0, NPlHl=0, NPlHq1=0, NPlHq3=0, NPlHu=0, NPlebH=0, NPleH=0, NPlqH1=0, NPlqH3=0, NPluH=0, NPqHd=0, NPqHu=0, NPuHd=0, NPuHu=0

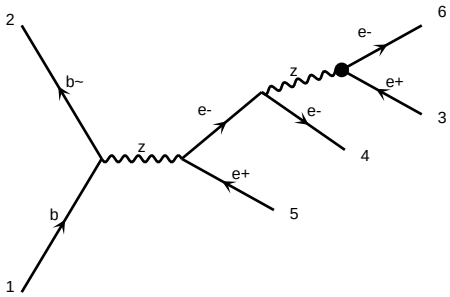

diagram 526 NP=1, NPcG=0, NPcGtil=0, NPcH=0, NPcHB=0, NPcHW=0, NPcHWB=0, NPcW=0, NPcWtil=0, NPlq1=0, NPlq3=0, NPqe=0, NPqu1=0, NPqu8=0, NPquqd1=0, NPquqd8=0, NPtqd1=0, NPtqd8=0, NPtu1=0, NPtu8=0, NPHDD=0

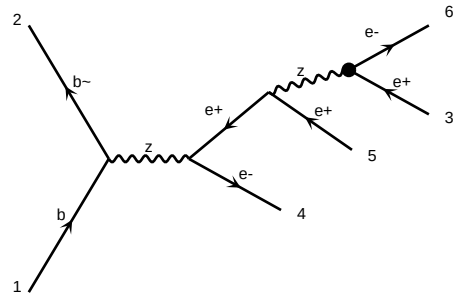

diagram 527 NP=1, NPcG=0, NPcGtil=0, NPcH=0, NPcHB=0, NPcHW=0, NPcHWB=0, NPcW=0, NPcWtil=0, NPlq1=0, NPlq3=0, NPqe=0, NPqu1=0, NPqu8=0, NPquqd1=0, NPquqd8=0, NPtqd1=0, NPtqd8=0, NPtu1=0, NPtu8=0, NPHDD=0

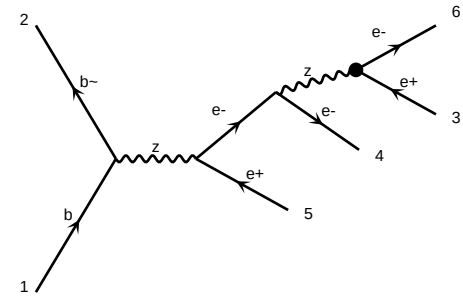

diagram 528 NP=1, NPcG=0, NPcGtil=0, NPcH=0, NPcHB=0, NPcHW=0, NPcHWB=0, NPcW=0, NPcWtil=0, NPlq1=0, NPlq3=0, NPqe=0, NPqu1=0, NPqu8=0, NPquqd1=0, NPquqd8=0, NPtqd1=0, NPtqd8=0, NPtu1=0, NPtu8=0, NPHDD=0

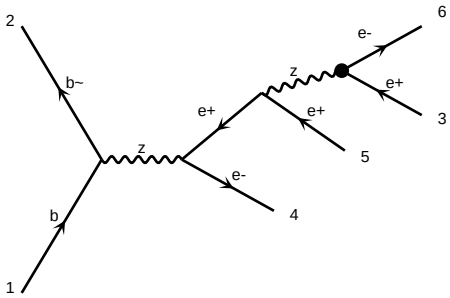

diagram 529 NP=1, NPcG=0, NPcGtil=0, NPcH=0, NPcHB=0, NPcHW=0, NPcHWB=0, NPcW=0, NPcWtil=0, NPlq1=0, NPlq3=0, NPqe=0, NPqu1=0, NPqu8=0, NPquqd1=0, NPquqd8=0, NPtqd1=0, NPtqd8=0, NPtu1=0, NPtu8=0, NPHDD=0

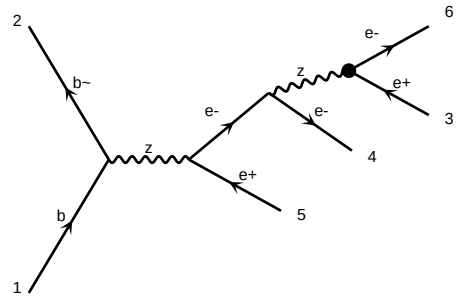

diagram 530 NP=1, NPcG=0, NPcGtil=0, NPcH=0, NPcHB=0, NPcHW=0, NPcHWB=0, NPcW=0, NPcWtil=0, NPlq1=0, NPlq3=0, NPqe=0, NPqu1=0, NPqu8=0, NPquqd1=0, NPquqd8=0, NPtqd1=0, NPtqd8=0, NPtu1=0, NPtu8=0, NPHDD=0

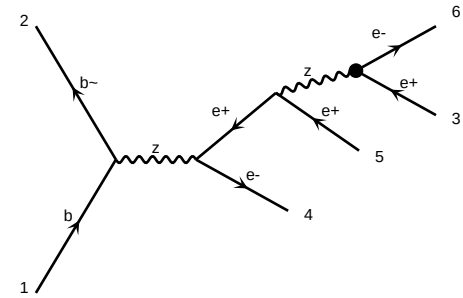

diagram 531 NP=1, NPcG=0, NPcGtil=0, NPcH=0, NPcHB=0, NPcHW=0, NPcHWB=0, NPcW=0, NPcWtil=0, NPlq1=0, NPlq3=0, NPqe=0, NPqu1=0, NPqu8=0, NPquqd1=0, NPquqd8=0, NPtqd1=0, NPtqd8=0, NPtu1=0, NPtu8=0, NPHDD=0

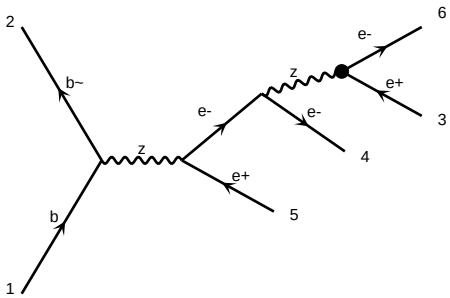

diagram 532 NP=1, NPcG=0, NPcGtil=0, NPcH=0, NPcHB=0, NPcHW=0, NPcHWB=0, NPcW=0, NPcWtil=0, NPlq1=0, NPlq3=0, NPqe=0, NPqu1=0, NPqu8=0, NPquqd1=0, NPquqd8=0, NPtqd1=0, NPtqd8=0, NPtu1=0, NPtu8=0, NPHDD=0

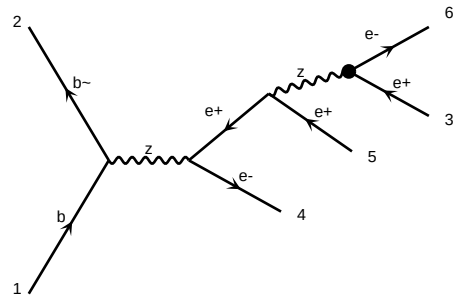

diagram 533 NP=1, NPcG=0, NPcGtil=0, NPcH=0, NPcHB=0, NPcHW=0, NPcHWB=0, NPcW=0, NPcWtil=0, NPlq1=0, NPlq3=0, NPqe=0, NPqu1=0, NPqu8=0, NPquqd1=0, NPquqd8=0, NPtqd1=0, NPtqd8=0, NPtu1=0, NPtu8=0, NPHDD=0

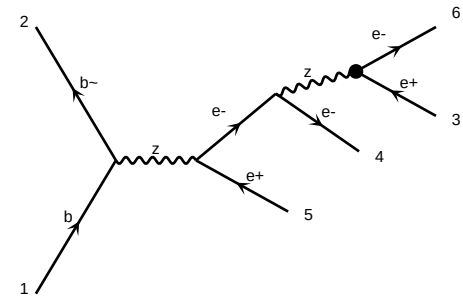

diagram 534 NP=1, NPcG=0, NPcGtil=0, NPcH=0, NPcHB=0, NPcHW=0, NPcHWB=0, NPcW=0, NPcWtil=0, NPlq1=0, NPlq3=0, NPqe=0, NPqu1=0, NPqu8=0, NPquqd1=0, NPquqd8=0, NPtqd1=0, NPtqd8=0, NPtu1=0, NPtu8=0, NPHDD=0

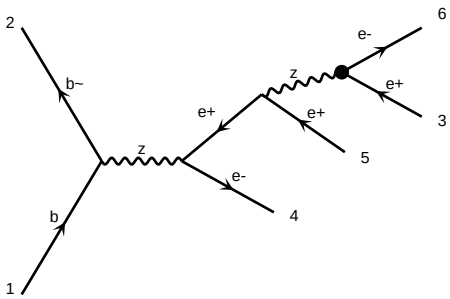

diagram 535 NP=1, NPcG=0, NPcGtil=0, NPcH=0, NPcHB=0, NPcHW=0, NPcHWB=0, NPcW=0, NPcWtil=0, NPlq1=0, NPlq3=0, NPqe=0, NPqu1=0, NPqu8=0, NPquqd1=0, NPquqd8=0, NPtqd1=0, NPtqd8=0, NPtu1=0, NPtu8=0, NPHDD=0

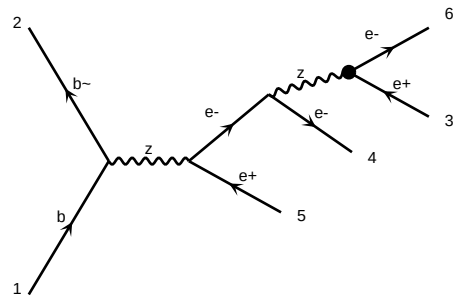

diagram 536 NP=1, NPcG=0, NPcGtil=0, NPcH=0, NPcHB=0, NPcHW=0, NPcHWB=0, NPcW=0, NPcWtil=0, NPlq1=0, NPlq3=0, NPqe=0, NPqu1=0, NPqu8=0, NPquqd1=0, NPquqd8=0, NPtqd1=0, NPtqd8=0, NPtu1=0, NPtu8=0, NPHDD=0

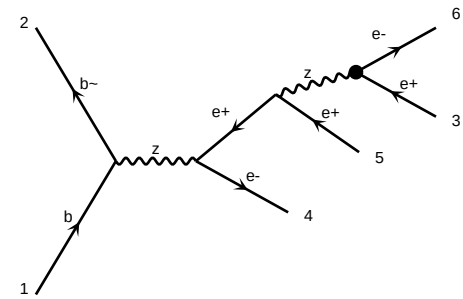

diagram 537 NP=1, NPcG=0, NPcGtil=0, NPcH=0, NPcHB=0, NPcHW=0, NPcHWB=0, NPcW=0, NPcWtil=0, NPlq1=0, NPlq3=0, NPqe=0, NPqu1=0, NPqu8=0, NPquqd1=0, NPquqd8=0, NPtqd1=0, NPtqd8=0, NPtu1=0, NPtu8=0, NPHDD=0

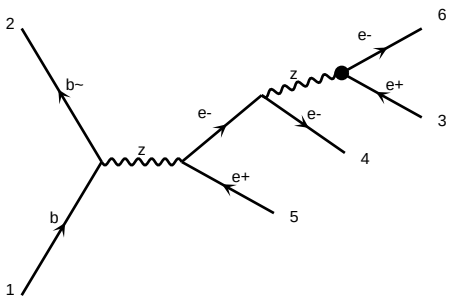

diagram 538 NP=1, NPcG=0, NPcGtil=0, NPcH=0, NPcHB=0, NPcHW=0, NPcHWB=0, NPcW=0, NPcWtil=0, NPlq1=0, NPlq3=0, NPqe=0, NPqu1=0, NPqu8=0, NPquqd1=0, NPquqd8=0, NPtqd1=0, NPtqd8=0, NPtu1=0, NPtu8=0, NPHDD=0

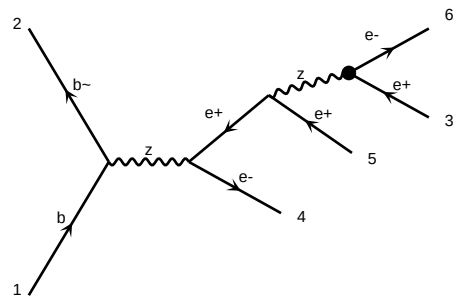

diagram 539 NP=1, NPcG=0, NPcGtil=0, NPcH=0, NPcHB=0, NPcHW=0, NPcHWB=0, NPcW=0, NPcWtil=0, NPlq1=0, NPlq3=0, NPqe=0, NPqu1=0, NPqu8=0, NPquqd1=0, NPquqd8=0, NPtqd1=0, NPtqd8=0, NPtu1=0, NPtu8=0, NPHDD=0

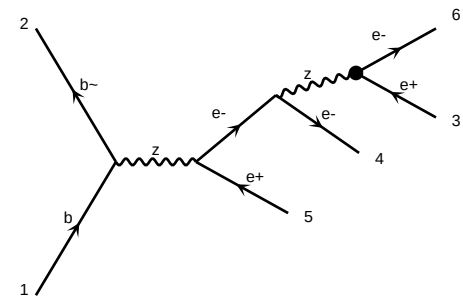

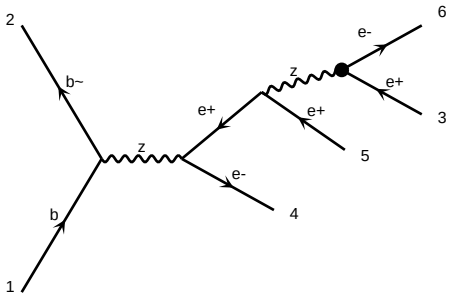

diagram 541 NP=1, NPcG=0, NPcGtil=0, NPcH=0, NPcHB=0, NPcHDD=0, NPcHW=0, NPcHWB=0, NPcW=0, NPcbH=0, NPcll=0, NPcqq1=0, NPcqq3=0, NPcqu1=0, NPcqu8=0, NPctH=0, NPctW=0

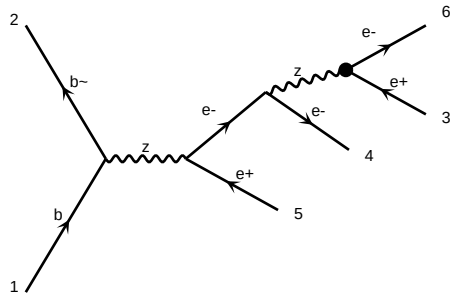

diagram 542 NP=1, NPcG=0, NPcGtil=0, NPcH=0, NPcHB=0, NPcHDD=0, NPcHW=0, NPcHWB=0, NPcW=0, NPcbH=0, NPcll=0, NPcqq1=0, NPcqq3=0, NPcqu1=0, NPcqu8=0, NPctH=0, NPctW=0

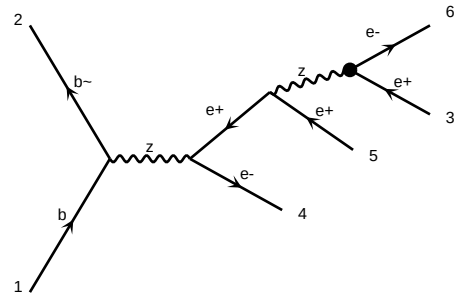

diagram 543 NP=1, NPcG=0, NPcGtil=0, NPcH=0, NPcHB=0, NPcHDD=0, NPcHW=0, NPcHWB=0, NPcW=0, NPcbH=0, NPcll=0, NPcqq1=0, NPcqq3=0, NPcqu1=0, NPcqu8=0, NPctH=0, NPctW=0

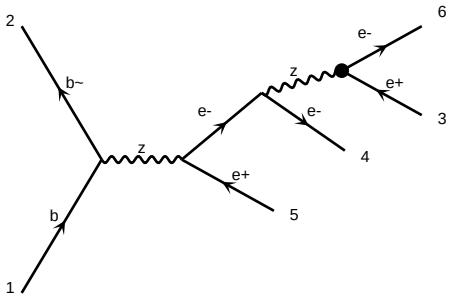

diagram 544 NP=1, NPcG=0, NPcGtil=0, NPcH=0, NPcHB=0, NPcHDD=0, NPcHW=0, NPcHWB=0, NPcW=0, NPcbH=0, NPcll=0, NPcqq1=0, NPcqq3=0, NPcqu1=0, NPcqu8=0, NPctH=0, NPctW=0

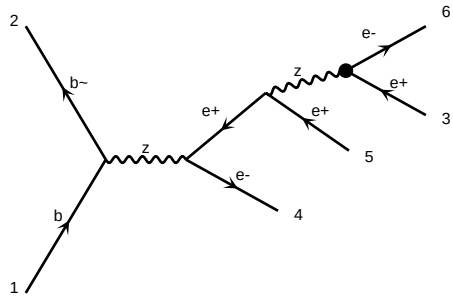

diagram 545 NP=1, NPcG=0, NPcGtil=0, NPcH=0, NPcHB=0, NPcHDD=0, NPcHW=0, NPcHWB=0, NPcW=0, NPcbH=0, NPcll=0, NPcqq1=0, NPcqq3=0, NPcqu1=0, NPcqu8=0, NPctH=0, NPctW=0

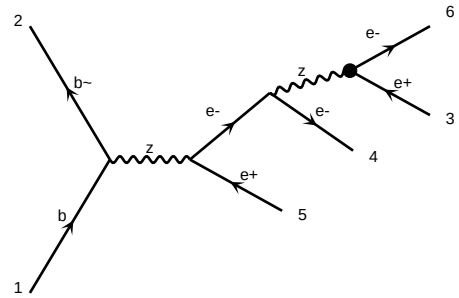

diagram 546 NP=1, NPcG=0, NPcGtil=0, NPcH=0, NPcHB=0, NPcHDD=0, NPcHW=0, NPcHWB=0, NPcW=0, NPcbH=0, NPcll=0, NPcqq1=0, NPcqq3=0, NPcqu1=0, NPcqu8=0, NPctH=0, NPctW=0

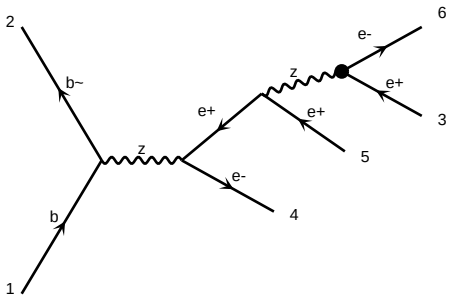

diagram 547 NP=1, NPcG=0, NPcGtil=0, NPcH=0, NPcHB=0, NPcHDD=0, NPcHW=0, NPcHWB=0, NPcW=0, NPcbH=0, NPcll=0, NPcqq1=0, NPcqq3=0, NPcqu1=0, NPcqu8=0, NPctH=0, NPctW=0

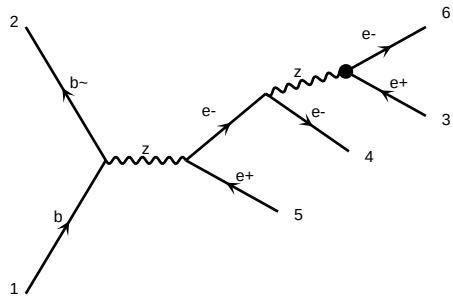

diagram 548 NP=1, NPcG=0, NPcGtil=0, NPcH=0, NPcHB=0, NPcHDD=0, NPcHW=0, NPcHWB=0, NPcW=0, NPcbH=0, NPcll=0, NPcqq1=0, NPcqq3=0, NPcqu1=0, NPcqu8=0, NPctH=0, NPctW=0

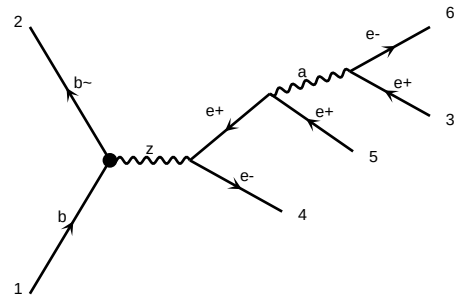

diagram 549 NP=1, NPcG=0, NPcGtil=0, NPcH=0, NPcHB=0, NPcHDD=0, NPcHW=0, NPcHWB=0, NPcW=0, NPcbH=0, NPcll=0, NPcqq1=0, NPcqq3=0, NPcqu1=0, NPcqu8=0, NPctH=0, NPctW=0

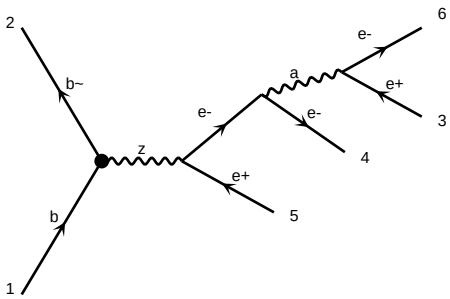

diagram 550 NP=1, NPcG=0, NPcGtil=0, NPcH=0, NPcHB=0, NPcHDD=0, NPcHW=0, NPcHWB=0, NPcW=0, NPcbH=0, NPcll=0, NPcqq1=0, NPcqq3=0, NPcqu1=0, NPcqu8=0, NPctH=0, NPctW=0

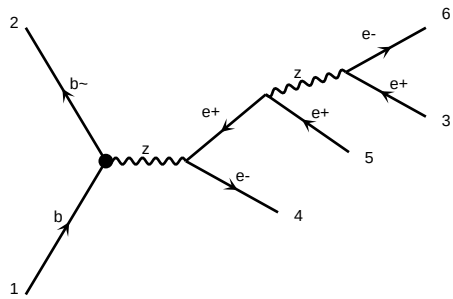

diagram 551 NP=1, NPcG=0, NPcGtil=0, NPcH=0, NPcHB=0, NPcHDD=0, NPcHW=0, NPcHWB=0, NPcW=0, NPcbH=0, NPcll=0, NPcqq1=0, NPcqq3=0, NPcqu1=0, NPcqu8=0, NPctH=0, NPctW=0

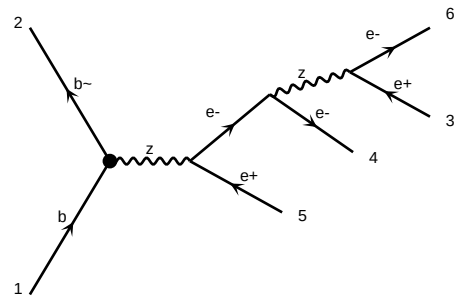

diagram 552 NP=1, NPcG=0, NPcGtil=0, NPcH=0, NPcHB=0, NPcHDD=0, NPcHW=0, NPcHWB=0, NPcW=0, NPcbH=0, NPcll=0, NPcqq1=0, NPcqq3=0, NPcqu1=0, NPcqu8=0, NPctH=0, NPctW=0

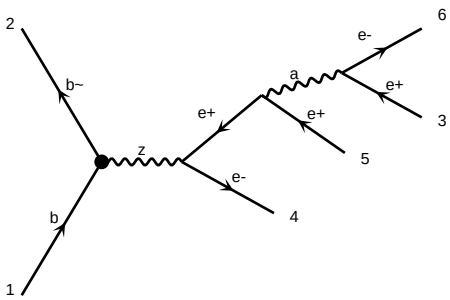

diagram 553 NP=1, NPcG=0, NPcGtil=0, NPcH=0, NPcHB=0, NPcHDD=0, NPcHW=0, NPcHWB=0, NPcW=0, NPcbH=0, NPcll=0, NPcqq1=0, NPcqq3=0, NPcqu1=0, NPcqu8=0, NPctH=0, NPctW=0

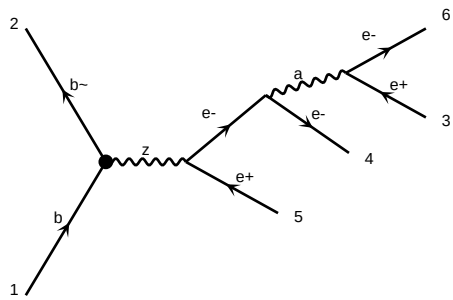

diagram 554 NP=1, NPcG=0, NPcGtil=0, NPcH=0, NPcHB=0, NPcHDD=0, NPcHW=0, NPcHWB=0, NPcW=0, NPcbH=0, NPcll=0, NPcqq1=0, NPcqq3=0, NPcqu1=0, NPcqu8=0, NPctH=0, NPctW=0

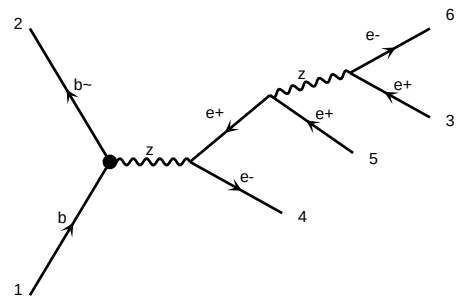

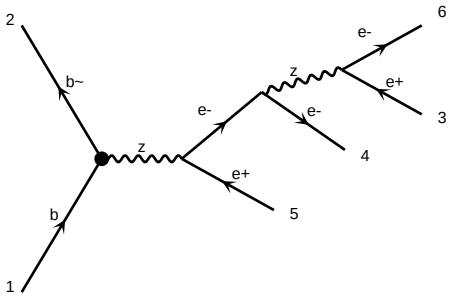

diagram 556 NP=1, NPcG=0, NPcGtil=0, NPcH=0, NPcHB=0, NPcHDD=0, NPcHW=0, NPcHWB=0, NPcW=0, NPcWtil=0, NPlq1=0, NPlq3=0, NPqe=0, NPqu1=0, NPqu8=0, NPquqd1=0, NPquqd8=0

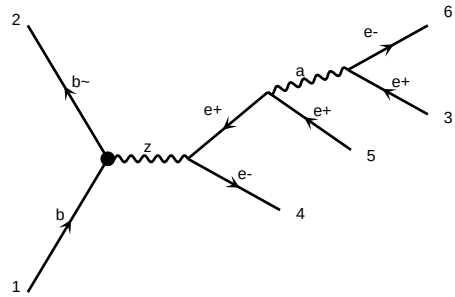

diagram 557 NP=1, NPcG=0, NPcGtil=0, NPcH=0, NPcHB=0, NPcHDD=0, NPcHW=0, NPcHWB=0, NPcW=0, NPcWtil=0, NPlq1=0, NPlq3=0, NPqe=0, NPqu1=0, NPqu8=0, NPquqd1=0, NPquqd8=0

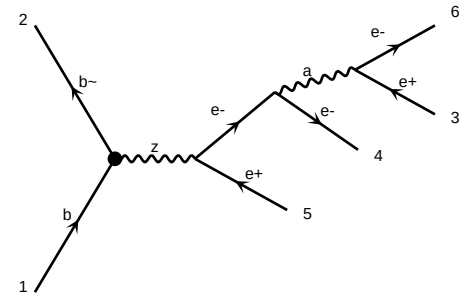

diagram 558 NP=1, NPcG=0, NPcGtil=0, NPcH=0, NPcHB=0, NPcHDD=0, NPcHW=0, NPcHWB=0, NPcW=0, NPcWtil=0, NPlq1=0, NPlq3=0, NPqe=0, NPqu1=0, NPqu8=0, NPquqd1=0, NPquqd8=0

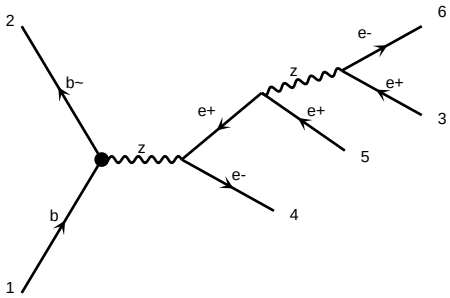

diagram 559 NP=1, NPcG=0, NPcGtil=0, NPcH=0, NPcHB=0, NPcHDD=0, NPcHW=0, NPcHWB=0, NPcW=0, NPcWtil=0, NPlq1=0, NPlq3=0, NPqe=0, NPqu1=0, NPqu8=0, NPquqd1=0, NPquqd8=0

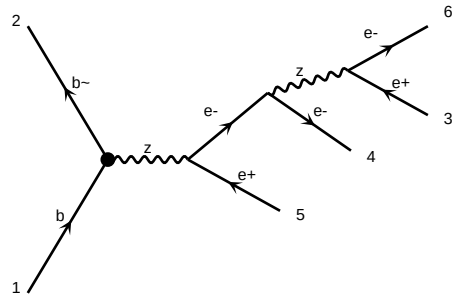

diagram 560 NP=1, NPcG=0, NPcGtil=0, NPcH=0, NPcHB=0, NPcHDD=0, NPcHW=0, NPcHWB=0, NPcW=0, NPcWtil=0, NPlq1=0, NPlq3=0, NPqe=0, NPqu1=0, NPqu8=0, NPquqd1=0, NPquqd8=0

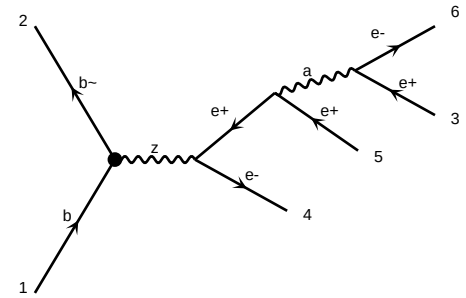

diagram 561 NP=1, NPcG=0, NPcGtil=0, NPcH=0, NPcHB=0, NPcHDD=0, NPcHW=0, NPcHWB=0, NPcW=0, NPcWtil=0, NPlq1=0, NPlq3=0, NPqe=0, NPqu1=0, NPqu8=0, NPquqd1=0, NPquqd8=0

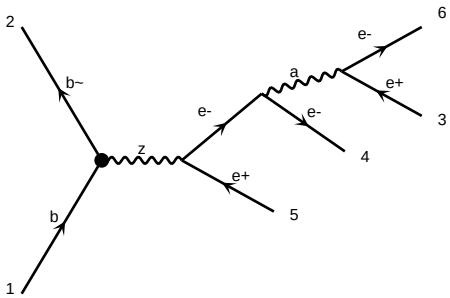

diagram 562 NP=1, NPcG=0, NPcGtil=0, NPcH=0, NPcHB=0, NPcHDD=0, NPcHW=0, NPcHWB=0, NPcW=0, NPcWtil=0, NPlq1=0, NPlq3=0, NPqe=0, NPqu1=0, NPqu8=0, NPquqd1=0, NPquqd8=0

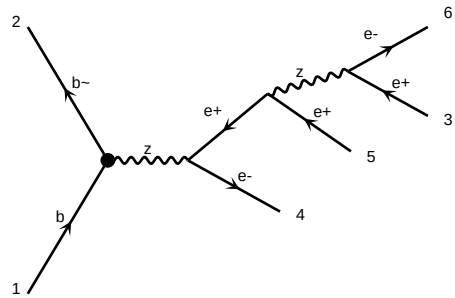

diagram 563 NP=1, NPcG=0, NPcGtil=0, NPcH=0, NPcHB=0, NPcHDD=0, NPcHW=0, NPcHWB=0, NPcW=0, NPcWtil=0, NPlq1=0, NPlq3=0, NPqe=0, NPqu1=0, NPqu8=0, NPquqd1=0, NPquqd8=0

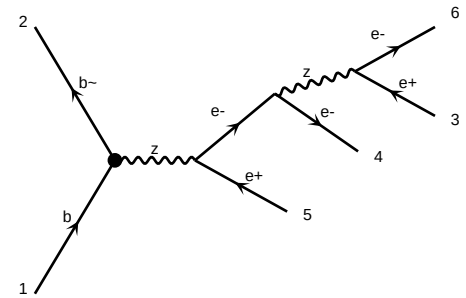

diagram 564 NP=1, NPcG=0, NPcGtil=0, NPcH=0, NPcHB=0, NPcHDD=0, NPcHW=0, NPcHWB=0, NPcW=0, NPcWtil=0, NPlq1=0, NPlq3=0, NPqe=0, NPqu1=0, NPqu8=0, NPquqd1=0, NPquqd8=0

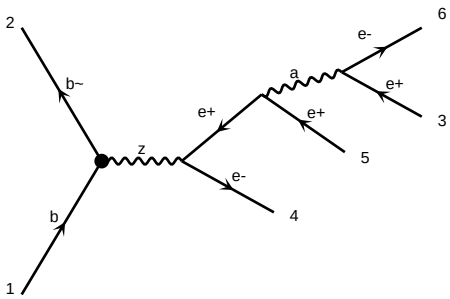

diagram 565 NP=1, NPcG=0, NPcGtil=0, NPcH=0, NPcHB=0, NPcHDD=0, NPcHW=0, NPcHWB=0, NPcW=0, NPcWtil=0, NPlq1=0, NPlq3=0, NPqe=0, NPqu1=0, NPqu8=0, NPquqd1=0, NPquqd8=0

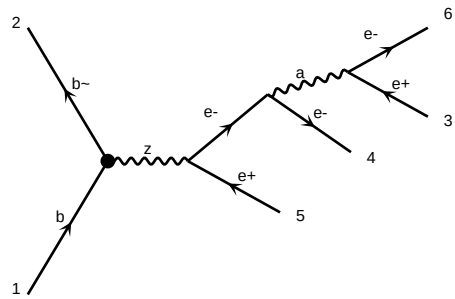

diagram 566 NP=1, NPcG=0, NPcGtil=0, NPcH=0, NPcHB=0, NPcHDD=0, NPcHW=0, NPcHWB=0, NPcW=0, NPcWtil=0, NPlq1=0, NPlq3=0, NPqe=0, NPqu1=0, NPqu8=0, NPquqd1=0, NPquqd8=0

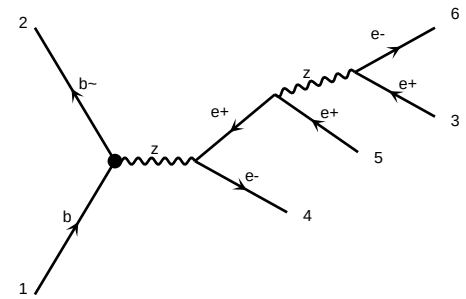

diagram 567 NP=1, NPcG=0, NPcGtil=0, NPcH=0, NPcHB=0, NPcHDD=0, NPcHW=0, NPcHWB=0, NPcW=0, NPcWtil=0, NPlq1=0, NPlq3=0, NPqe=0, NPqu1=0, NPqu8=0, NPquqd1=0, NPquqd8=0

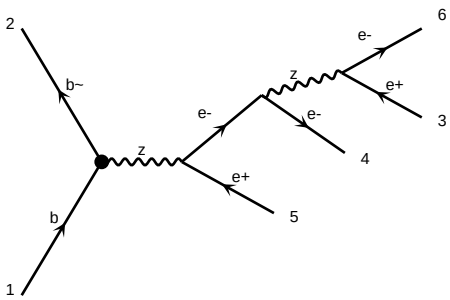

diagram 568 NP=1, NPcG=0, NPcGtil=0, NPcH=0, NPcHB=0, NPcHDD=0, NPcHW=0, NPcHWB=0, NPcW=0, NPcWtil=0, NPlq1=0, NPlq3=0, NPqe=0, NPqu1=0, NPqu8=0, NPquqd1=0, NPquqd8=0

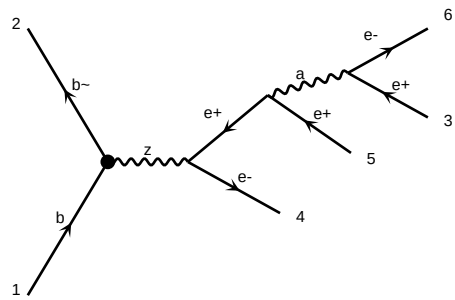

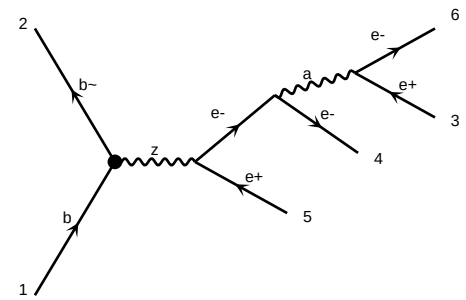

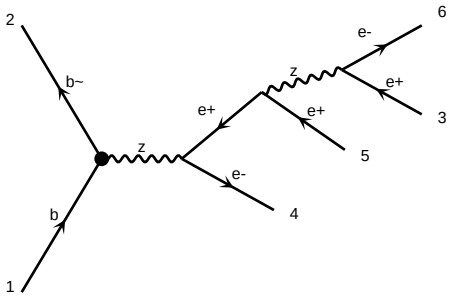

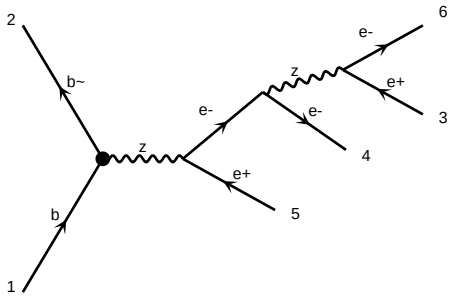

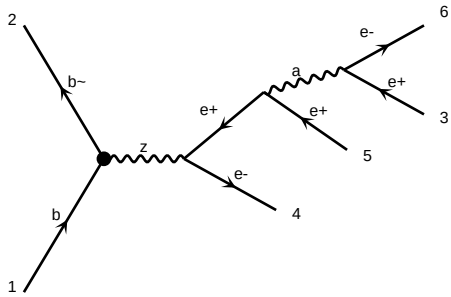

diagram 571 NP=1, NPcG=0, NPcGtil=0, NPcH=0, NPcHB=0, NPcHDD=0, NPcHW=0, NPcHWB=0, NPcW=0, NPeHB=0, NPeW=0, NPlH1=0, NPlH3=0, NPlHB=0, NPlHW=0, NPlL1=0, NPlL3=0, NPlQ1=0, NPlQ3=0, NPuB=0, NPuG=0, NPuH=0, NPuW=0, NPdB=0, NPdG=0, NPdH=0, NPdW=0, NPqq1=0, NPqq11=0, NPqq3=0, NPqq31=0, NPlu=0, NPld=0, NPqu1=0, NPqu8=0, NPqd1=0, NPqd8=0, NPlq1=0, NPlq3=0, NPeu=0, NPed=0, NPle=0, NPqe=0, NPud1=0, NPud8=0, NPledq=0, NPquqd1=0, NPquqd8=0, NPlequ1=0, NPlequ3=0, NPllll=0, NPqqqq1=0, NPqqqq11=0, NPqqqq3=0, NPqqqq31=0, NPlluu=0, NPlqqq1=0, NPlqqq3=0, NPeeuu=0, NPlleq=0, NPeeee=0, NPqqqu1=0, NPqqqu8=0, NPqqqd1=0, NPqqqd8=0, NPlqud1=0, NPlqud8=0, NPuuuu=0, NPddddu=0, NPuuud1=0, NPuuud8=0, NPqque1=0, NPqque8=0, NPlque=0, NPeeud=0, NPqqql1=0, NPqqql3=0, NPlqql=0, NPeeqq=0, NPeeql=0, NPqqqq=0, NPuuuu=0, NPddddu=0, NPuuud=0, NPqque=0, NPlque=0, NPeeud=0, NPqqql

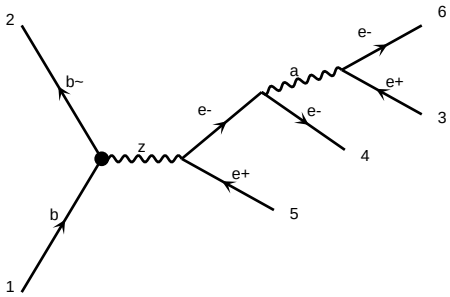

diagram 586 NP=1, NPcG=0, NPcGtil=0, NPcH=0, NPcHB=0, NPcHDD=0, NPcHW=0, NPcHWB=0, NPcW=0, NPcWtil=0, NPlB=0, NPlH1=0, NPlH2=0, NPlHB=0, NPlHW=0, NPlL1=0, NPlL2=0, NPlQ1=0, NPlQ3=0, NPlW=0, NPqB=0, NPqG=0, NPqH=0, NPqW=0, NPuB=0, NPuG=0, NPuH=0, NPuW=0

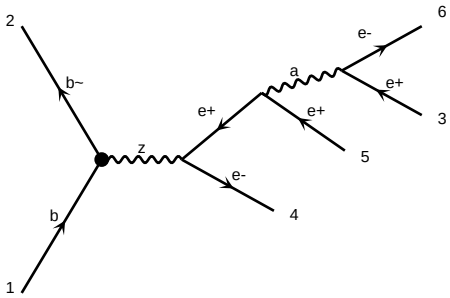

diagram 589 NP=1, NPcG=0, NPcGtil=0, NPcH=0, NPcHB=0, NPcHDD=0, NPcHW=0, NPcHWB=0, NPcW=0, NPcWtil=0, NPlB=0, NPlH1=0, NPlH2=0, NPlHB=0, NPlHW=0, NPlL1=0, NPlL2=0, NPlQ1=0, NPlQ3=0, NPlW=0, NPqB=0, NPqG=0, NPqH=0, NPqW=0, NPuB=0, NPuG=0, NPuH=0, NPuW=0

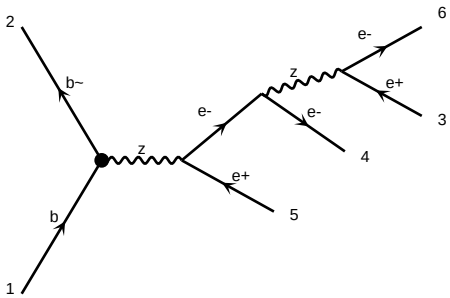

diagram 592 NP=1, NPcG=0, NPcGtil=0, NPcH=0, NPcHB=0, NPcHDD=0, NPcHW=0, NPcHWB=0, NPcW=0, NPcWtil=0, NPlB=0, NPlH1=0, NPlH2=0, NPlHB=0, NPlHW=0, NPlL1=0, NPlL2=0, NPlQ1=0, NPlQ3=0, NPlW=0, NPqB=0, NPqG=0, NPqH=0, NPqW=0, NPuB=0, NPuG=0, NPuH=0, NPuW=0

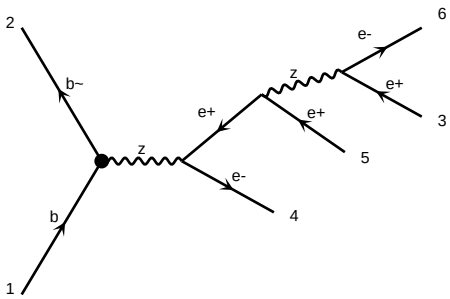

diagram 595 NP=1, NPcG=0, NPcGtil=0, NPcH=0, NPcHB=0, NPcHDD=0, NPcHW=0, NPcHWB=0, NPcW=0, NPcWtil=0, NPlB=0, NPlH1=0, NPlH2=0, NPlHB=0, NPlHW=0, NPlL1=0, NPlL2=0, NPlQ1=0, NPlQ3=0, NPlW=0, NPqB=0, NPqG=0, NPqH=0, NPqW=0, NPuB=0, NPuG=0, NPuH=0, NPuW=0

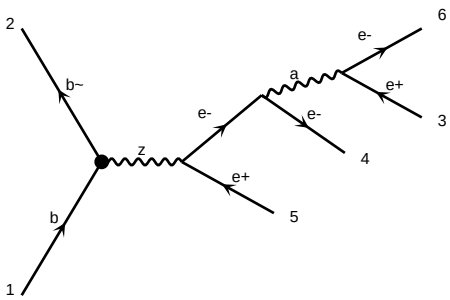

diagram 598 NP=1, NPcG=0, NPcGtil=0, NPcH=0, NPcHB=0, NPcHDD=0, NPcHW=0, NPcHWB=0, NPcW=0, NPcWtil=0, NPlB=0, NPlH1=0, NPlH2=0, NPlHB=0, NPlHW=0, NPlL1=0, NPlL2=0, NPlQ1=0, NPlQ3=0, NPlW=0, NPqB=0, NPqG=0, NPqH=0, NPqW=0, NPuB=0, NPuG=0, NPuH=0, NPuW=0

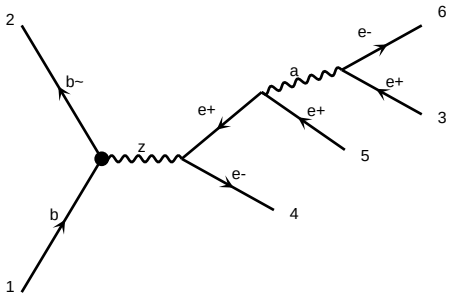

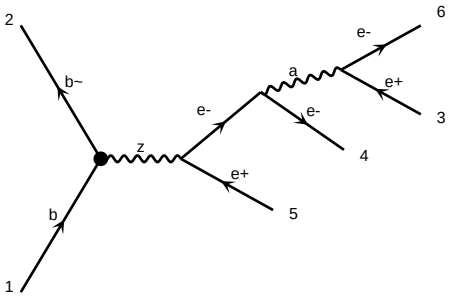

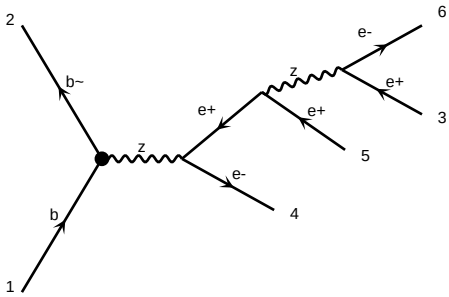

diagram 601 NP=1, NPcG=0, NPcGtil=0, NPcH=0, NPcHB=0, NPcHDD=0, NPcHW=0, NPcHWB=0, NPcW=0, NPeHB=0, NPeW=0, NPlH1=0, NPlH3=0, NPlHB=0, NPlHW=0, NPlL1=0, NPlL3=0, NPlQ1=0, NPlQ3=0, NPuB=0, NPuH=0, NPuW=0, NPdB=0, NPdH=0, NPdW=0, NPqG=0, NPqH=0, NPqW=0

diagram 602

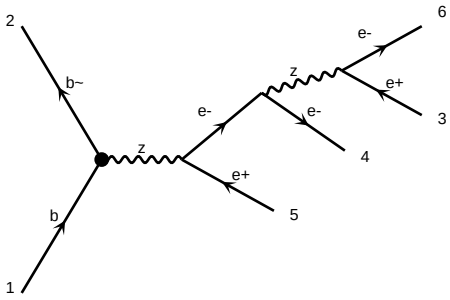

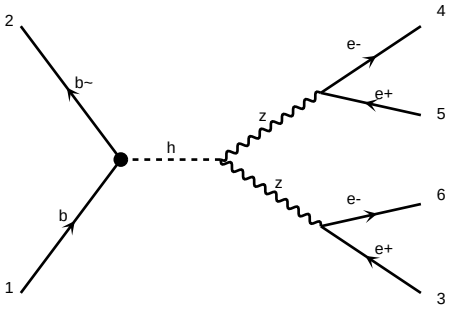

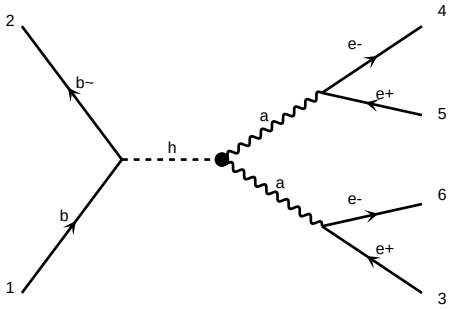

diagram 604 NP=1, NPcG=0, NPcGtil=0, NPcH=0, NPcHB=0, NPcHDD=0, NPcHW=0, NPcHWB=0, NPcW=0, NPeHB=0, NPeW=0, NPlH1=0, NPlH3=0, NPlHB=0, NPlHW=0, NPlL1=0, NPlL3=0, NPlQ1=0, NPlQ3=0, NPuB=0, NPuH=0, NPuW=0, NPdB=0, NPdH=0, NPdW=0, NPqG=0, NPqH=0, NPqW=0

diagram 605

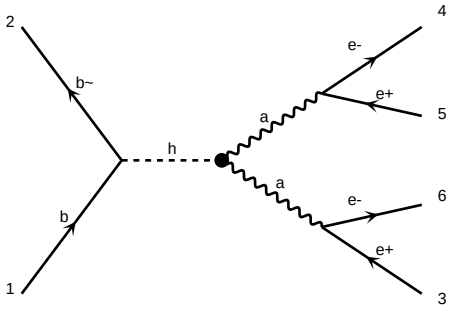

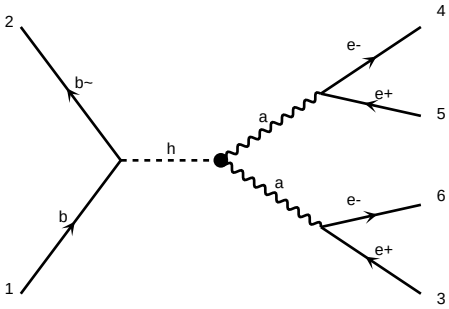

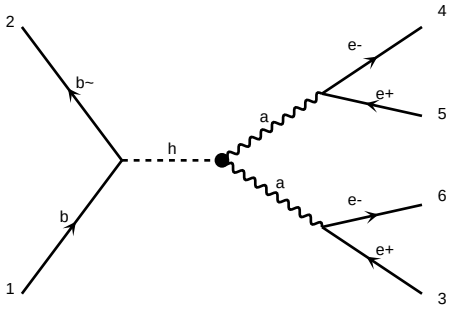

diagram 607 NP=1, NPcG=0, NPcGtil=0, NPcH=0, NPcHB=0, NPcHDD=0, NPcHW=0, NPcHWB=0, NPcW=0, NPeHB=0, NPeW=0, NPlH1=0, NPlH3=0, NPlHB=0, NPlHW=0, NPlL1=0, NPlL3=0, NPlQ1=0, NPlQ3=0, NPuB=0, NPuH=0, NPuW=0, NPdB=0, NPdH=0, NPdW=0, NPqG=0, NPqH=0, NPqW=0

diagram 608

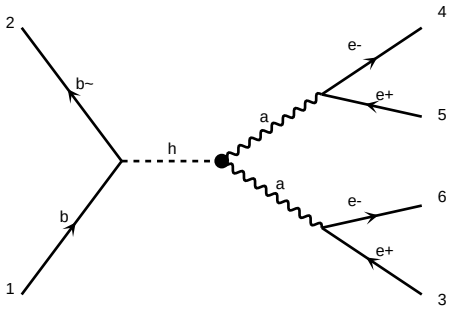

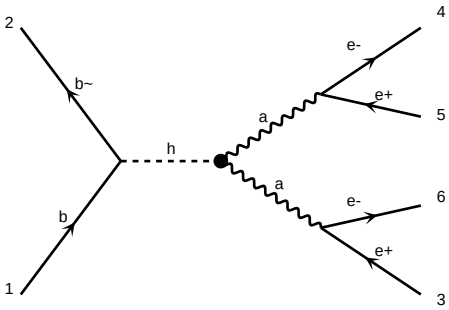

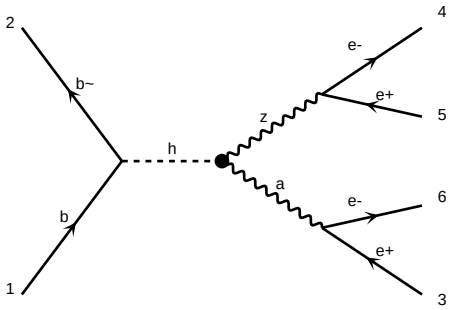

diagram 610 NP=1, NPcG=0, NPcGtil=0, NPcH=0, NPcHB=0, NPcHDD=0, NPcHW=0, NPcHWB=0, NPcW=0, NPeHB=0, NPeW=0, NPlH1=0, NPlH3=0, NPlHB=0, NPlHW=0, NPlL1=0, NPlL3=0, NPlQ1=0, NPlQ3=0, NPuB=0, NPuH=0, NPuW=0, NPdB=0, NPdH=0, NPdW=0, NPqG=0, NPqH=0, NPqW=0

diagram 611

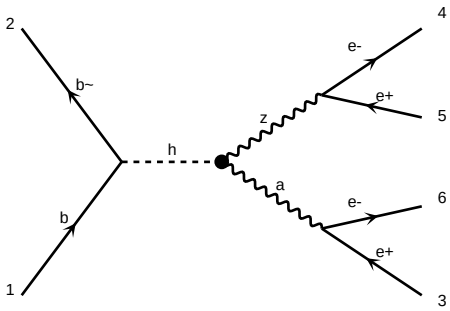

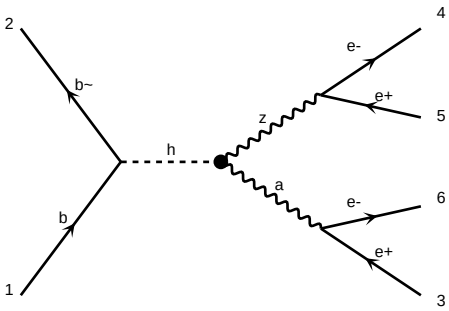

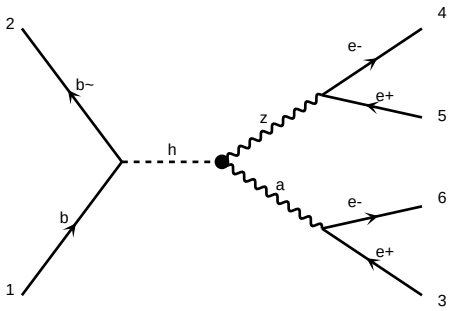

diagram 613 NP=1, NPcG=0, NPcGtil=0, NPcH=0, NPcHB=0, NPcHDD=0, NPcHW=0, NPcHWB=0, NPcW=0, NPeHB=0, NPeW=0, NPlH1=0, NPlH3=0, NPlHB=0, NPlHW=0, NPlL1=0, NPlL3=0, NPlQ1=0, NPlQ3=0, NPuB=0, NPuH=0, NPuW=0, NPdB=0, NPdH=0, NPdW=0, NPqG=0, NPqH=0, NPqW=0

diagram 614

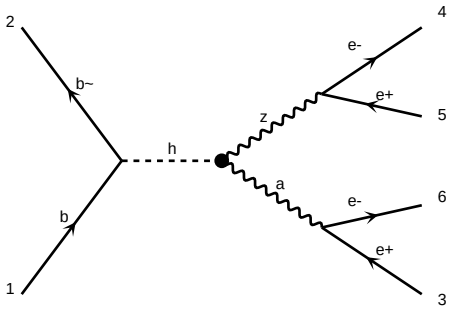

diagram 616 NP=1, NPcG=0, NPcGtil=0, NPcH=0, NPcHB=1, NPcHDD=0, NPcHW=0, NPcHWB=0, NPcW=0, NPcWtil=0, NPlamWtil=0, NPlamdim6=0, NPtG=0, NPtau=0

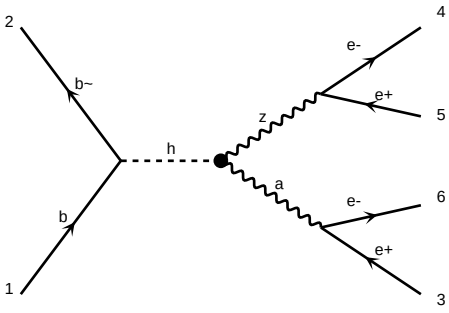

diagram 617 NP=1, NPcG=0, NPcGtil=0, NPcH=0, NPcHB=0, NPcHDD=0, NPcHW=0, NPcHWB=1, NPcW=0, NPcWtil=0, NPlamWtil=0, NPlamdim6=0, NPtG=0, NPtau=0

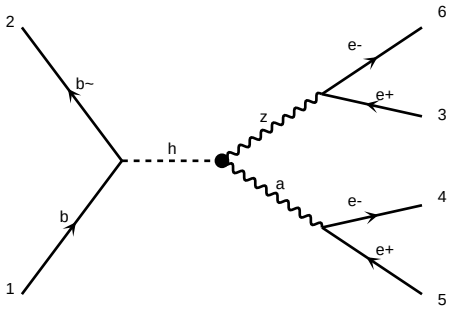

diagram 618 NP=1, NPcG=0, NPcGtil=0, NPcH=0, NPcHB=0, NPcHDD=1, NPcHW=0, NPcHWB=0, NPcW=0, NPcWtil=0, NPlamWtil=0, NPlamdim6=0, NPtG=0, NPtau=0

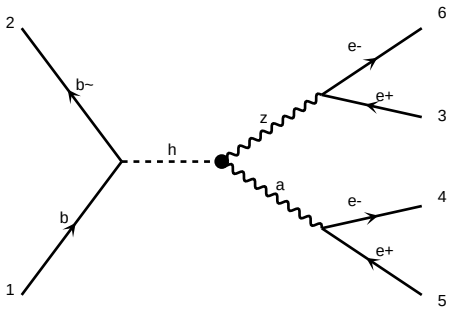

diagram 619 NP=1, NPcG=0, NPcGtil=0, NPcH=0, NPcHB=0, NPcHDD=0, NPcHW=1, NPcHWB=0, NPcW=0, NPcWtil=0, NPlamWtil=0, NPlamdim6=0, NPtG=0, NPtau=0

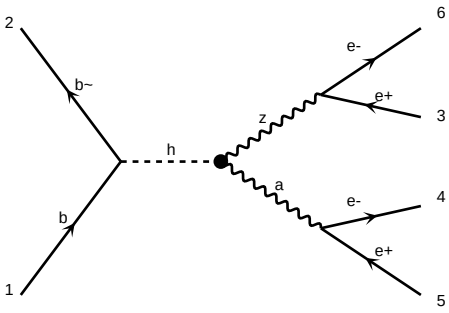

diagram 620 NP=1, NPcG=0, NPcGtil=0, NPcH=0, NPcHB=0, NPcHDD=0, NPcHW=0, NPcHWB=1, NPcW=0, NPcWtil=0, NPlamWtil=0, NPlamdim6=0, NPtG=0, NPtau=0

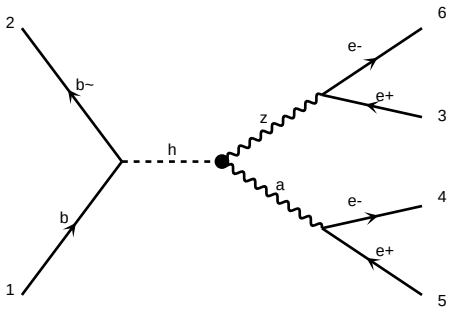

diagram 621 NP=1, NPcG=0, NPcGtil=0, NPcH=0, NPcHB=0, NPcHDD=0, NPcHW=0, NPcHWB=0, NPcW=1, NPcWtil=0, NPlamWtil=0, NPlamdim6=0, NPtG=0, NPtau=0

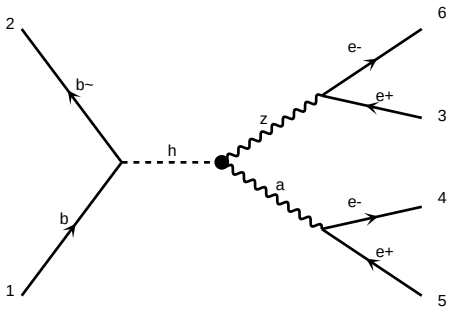

diagram 622 NP=1, NPcG=0, NPcGtil=0, NPcH=0, NPcHB=1, NPcHDD=0, NPcHW=0, NPcHWB=0, NPcW=0, NPcWtil=0, NPlamWtil=0, NPlamdim6=0, NPtG=0, NPtau=0

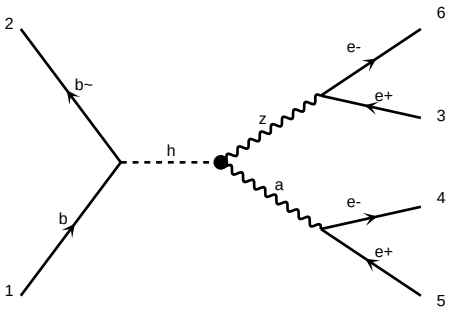

diagram 623 NP=1, NPcG=0, NPcGtil=0, NPcH=0, NPcHB=0, NPcHDD=0, NPcHW=0, NPcHWB=1, NPcW=0, NPcWtil=0, NPlamWtil=0, NPlamdim6=0, NPtG=0, NPtau=0

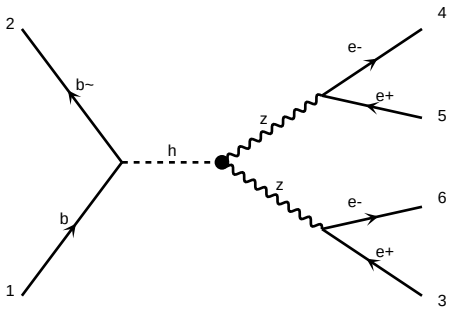

diagram 624 NP=1, NPcG=0, NPcGtil=0, NPcH=0, NPcHB=0, NPcHDD=1, NPcHW=0, NPcHWB=0, NPcW=0, NPcWtil=0, NPlamWtil=0, NPlamdim6=0, NPtG=0, NPtau=0

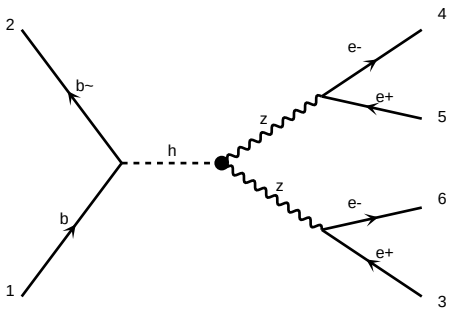

diagram 625 NP=1, NPcG=0, NPcGtil=0, NPcH=0, NPcHB=0, NPcHDD=0, NPcHW=0, NPcHWB=1, NPcW=0, NPcWtil=0, NPlamWtil=0, NPlamdim6=0, NPtG=0, NPtau=0

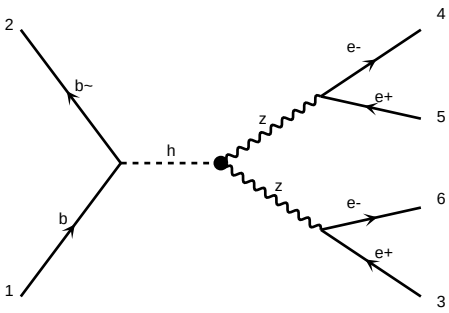

diagram 626 NP=1, NPcG=0, NPcGtil=0, NPcH=0, NPcHB=0, NPcHDD=0, NPcHW=1, NPcHWB=0, NPcW=0, NPcWtil=0, NPlamWtil=0, NPlamdim6=0, NPtG=0, NPtau=0

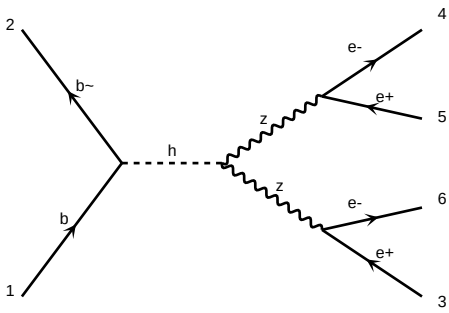

diagram 627 NP=1, NPcG=0, NPcGtil=0, NPcH=0, NPcHB=0, NPcHDD=0, NPcHW=0, NPcHWB=0, NPcW=1, NPcWtil=0, NPlamWtil=0, NPlamdim6=0, NPtG=0, NPtau=0

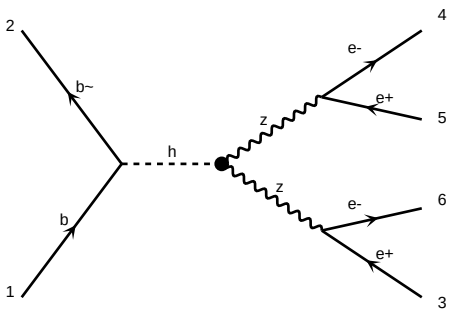

diagram 628 NP=1, NPcG=0, NPcGtil=0, NPcH=0, NPcHB=0, NPcHDD=0, NPcHW=0, NPcHWB=1, NPcW=0, NPcWtil=0, NPlamWtil=0, NPlamdim6=0, NPtG=0, NPtau=0

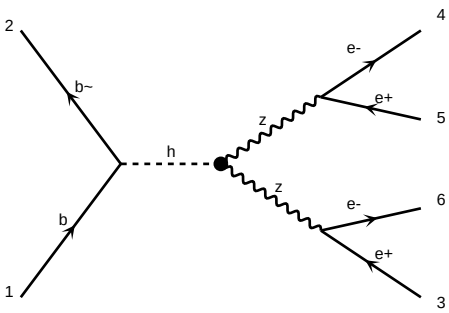

diagram 629 NP=1, NPcG=0, NPcGtil=0, NPcH=0, NPcHB=0, NPcHDD=0, NPcHW=0, NPcHWB=0, NPcW=1, NPcWtil=0, NPlamWtil=0, NPlamdim6=0, NPtG=0, NPtau=0

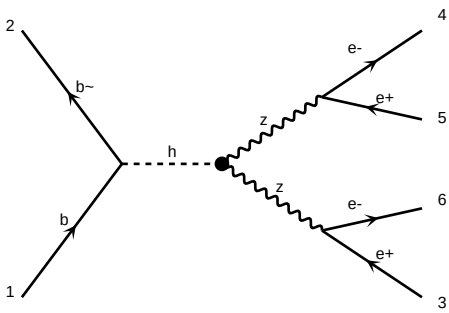

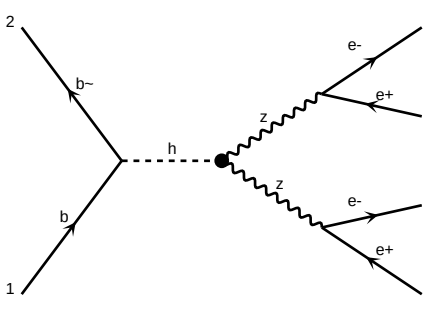

diagram 631 NP=1, NPcG=0, NPcGtil=0, NPcH=0, NPcHB=0, NPcHBtil=0, NPcHDD=0, NPcHW=0, NPcHWB=0, NPcHWtil=0, NPcHWtilB=0, NPcW=0, NPcWtil=0, NPdcHQ3=0, NPdcHQtil3=0, NPdcHu=0, NPdcHudtil=0, NPdcHutil=0, NPeHRe11=0, NPeHRe12=0, NPeHRe13=0, NPeHRe21=0, NPeHRe22=0, NPeHRe23=0, NPeHRe31=0, NPeHRe32=0, NPeHRe33=0, NPeHWRe11=0, NPeHWRe12=0, NPeHWRe13=0, NPeHWRe21=0, NPeHWRe22=0, NPeHWRe23=0, NPeHWRe31=0, NPeHWRe32=0, NPeHWRe33=0, NPeWRe11=0, NPeWRe12=0, NPeWRe13=0, NPeWRe21=0, NPeWRe22=0, NPeWRe23=0, NPeWRe31=0, NPeWRe32=0, NPeWRe33=0, NPlHRe11=0, NPlHRe12=0, NPlHRe13=0, NPlHRe21=0, NPlHRe22=0, NPlHRe23=0, NPlHRe31=0, NPlHRe32=0, NPlHRe33=0, NPlequ1Re1111=0, NPlequ1Re1112=0, NPlequ1Re1113=0, NPlequ1Re1121=0, NPlequ1Re1122=0, NPlequ1Re1123=0, NPlequ1Re1131=0, NPlequ1Re1132=0, NPlequ1Re1133=0, NPlequ1Re1211=0, NPlequ1Re1212=0, NPlequ1Re1213=0, NPlequ1Re1221=0, NPlequ1Re1222=0, NPlequ1Re1223=0, NPlequ1Re1231=0, NPlequ1Re1232=0, NPlequ1Re1233=0, NPlequ1Re1311=0, NPlequ1Re1312=0, NPlequ1Re1313=0, NPlequ1Re1321=0, NPlequ1Re1322=0, NPlequ1Re1323=0, NPlequ1Re1331=0, NPlequ1Re1332=0, NPlequ1Re1333=0, NPlequ1Re2111=0, NPlequ1Re2112=0, NPlequ1Re2113=0, NPlequ1Re2121=0, NPlequ1Re2122=0, NPlequ1Re2123=0, NPlequ1Re2131=0, NPlequ1Re2132=0, NPlequ1Re2133=0, NPlequ1Re2211=0, NPlequ1Re2212=0, NPlequ1Re2213=0, NPlequ1Re2221=0, NPlequ1Re2222=0, NPlequ1Re2223=0, NPlequ1Re2231=0, NPlequ1Re2232=0, NPlequ1Re2233=0, NPlequ1Re2311=0, NPlequ1Re2312=0, NPlequ1Re2313=0, NPlequ1Re2321=0, NPlequ1Re2322=0, NPlequ1Re2323=0, NPlequ1Re2331=0, NPlequ1Re2332=0, NPlequ1Re2333=0, NPlequ1Re3111=0, NPlequ1Re3112=0, NPlequ1Re3113=0, NPlequ1Re3121=0, NPlequ1Re3122=0, NPlequ1Re3123=0, NPlequ1Re3131=0, NPlequ1Re3132=0, NPlequ1Re3133=0, NPlequ1Re3211=0, NPlequ1Re3212=0, NPlequ1Re3213=0, NPlequ1Re3221=0, NPlequ1Re3222=0, NPlequ1Re3223=0, NPlequ1Re3231=0, NPlequ1Re3232=0, NPlequ1Re3233=0, NPlequ1Re3311=0, NPlequ1Re3312=0, NPlequ1Re3313=0, NPlequ1Re3321=0, NPlequ1Re3322=0, NPlequ1Re3323=0, NPlequ1Re3331=0, NPlequ1Re3332=0, NPlequ1Re3333=0, NPlequ3Re1111=0, NPlequ3Re1112=0, NPlequ3Re1113=0, NPlequ3Re1121=0, NPlequ3Re1122=0, NPlequ3Re1123=0, NPlequ3Re1131=0, NPlequ3Re1132=0, NPlequ3Re1133=0, NPlequ3Re1211=0, NPlequ3Re1212=0, NPlequ3Re1213=0, NPlequ3Re1221=0, NPlequ3Re1222=0, NPlequ3Re1223=0, NPlequ3Re1231=0, NPlequ3Re1232=0, NPlequ3Re1233=0, NPlequ3Re1311=0, NPlequ3Re1312=0, NPlequ3Re1313=0, NPlequ3Re1321=0, NPlequ3Re1322=0, NPlequ3Re1323=0, NPlequ3Re1331=0, NPlequ3Re1332=0, NPlequ3Re1333=0, NPlequ3Re2111=0, NPlequ3Re2112=0, NPlequ3Re2113=0, NPlequ3Re2121=0, NPlequ3Re2122=0, NPlequ3Re2123=0, NPlequ3Re2131=0, NPlequ3Re2132=0, NPlequ3Re2133=0, NPlequ3Re2211=0, NPlequ3Re2212=0, NPlequ3Re2213=0, NPlequ3Re2221=0, NPlequ3Re2222=0, NPlequ3Re2223=0, NPlequ3Re2231=0, NPlequ3Re2232=0, NPlequ3Re2233=0, NPlequ3Re2311=0, NPlequ3Re2312=0, NPlequ3Re2313=0, NPlequ3Re2321=0, NPlequ3Re2322=0, NPlequ3Re2323=0, NPlequ3Re2331=0, NPlequ3Re2332=0, NPlequ3Re2333=0, NPlequ3Re3111=0, NPlequ3Re3112=0, NPlequ3Re3113=0, NPlequ3Re3121=0, NPlequ3Re3122=0, NPlequ3Re3123=0, NPlequ3Re3131=0, NPlequ3Re3132=0, NPlequ3Re3133=0, NPlequ3Re3211=0, NPlequ3Re3212=0, NPlequ3Re3213=0, NPlequ3Re3221=0, NPlequ3Re3222=0, NPlequ3Re3223=0, NPlequ3Re3231=0, NPlequ3Re3232=0, NPlequ3Re3233=0, NPlequ3Re3311=0, NPlequ3Re3312=0, NPlequ3Re3313=0, NPlequ3Re3321=0, NPlequ3Re3322=0, NPlequ3Re3323=0, NPlequ3Re3331=0, NPlequ3Re3332=0, NPlequ3Re3333=0, NPqHRe11=0, NPqHRe12=0, NPqHRe13=0, NPqHRe21=0, NPqHRe22=0, NPqHRe23=0, NPqHRe31=0, NPqHRe32=0, NPqHRe33=0, NPqWRe11=0, NPqWRe12=0, NPqWRe13=0, NPqWRe21=0, NPqWRe22=0, NPqWRe23=0, NPqWRe31=0, NPqWRe32=0, NPqWRe33=0, NPquHRe11=0, NPquHRe12=0, NPquHRe13=0, NPquHRe21=0, NPquHRe22=0, NPquHRe23=0, NPquHRe31=0, NPquHRe32=0, NPquHRe33=0, NPquu1Re1111=0, NPquu1Re1112=0, NPquu1Re1113=0, NPquu1Re1121=0, NPquu1Re1122=0, NPquu1Re1123=0, NPquu1Re1131=0, NPquu1Re1132=0, NPquu1Re1133=0, NPquu1Re1211=0, NPquu1Re1212=0, NPquu1Re1213=0, NPquu1Re1221=0, NPquu1Re1222=0, NPquu1Re1223=0, NPquu1Re1231=0, NPquu1Re1232=0, NPquu1Re1233=0, NPquu1Re1311=0, NPquu1Re1312=0, NPquu1Re1313=0, NPquu1Re1321=0, NPquu1Re1322=0, NPquu1Re1323=0, NPquu1Re1331=0, NPquu1Re1332=0, NPquu1Re1333=0, NPquu1Re2111=0, NPquu1Re2112=0, NPquu1Re2113=0, NPquu1Re2121=0, NPquu1Re2122=0, NPquu1Re2123=0, NPquu1Re2131=0, NPquu1Re2132=0, NPquu1Re2133=0, NPquu1Re2211=0, NPquu1Re2212=0, NPquu1Re2213=0, NPquu1Re2221=0, NPquu1Re2222=0, NPquu1Re2223=0, NPquu1Re2231=0, NPquu1Re2232=0, NPquu1Re2233=0, NPquu1Re2311=0, NPquu1Re2312=0, NPquu1Re2313=0, NPquu1Re2321=0, NPquu1Re2322=0, NPquu1Re2323=0, NPquu1Re2331=0, NPquu1Re2332=0, NPquu1Re2333=0, NPquu1Re3111=0, NPquu1Re3112=0, NPquu1Re3113=0, NPquu1Re3121=0, NPquu1Re3122=0, NPquu1Re3123=0, NPquu1Re3131=0, NPquu1Re3132=0, NPquu1Re3133=0, NPquu1Re3211=0, NPquu1Re3212=0, NPquu1Re3213=0, NPquu1Re3221=0, NPquu1Re3222=0, NPquu1Re3223=0, NPquu1Re3231=0, NPquu1Re3232=0, NPquu1Re3233=0, NPquu1Re3311=0, NPquu1Re3312=0, NPquu1Re3313=0, NPquu1Re3321=0, NPquu1Re3322=0, NPquu1Re3323=0, NPquu1Re3331=0, NPquu1Re3332=0, NPquu1Re3333=0, NPquu8Re1111=0, NPquu8Re1112=0, NPquu8Re1113=0, NPquu8Re1121=0, NPquu8Re1122=0, NPquu8Re1123=0, NPquu8Re1131=0, NPquu8Re1132=0, NPquu8Re1133=0, NPquu8Re1211=0, NPquu8Re1212=0, NPquu8Re1213=0, NPquu8Re1221=0, NPquu8Re1222=0, NPquu8Re1223=0, NPquu8Re1231=0, NPquu8Re1232=0, NPquu8Re1233=0, NPquu8Re1311=0, NPquu8Re1312=0, NPquu8Re1313=0, NPquu8Re1321=0, NPquu8Re1322=0, NPquu8Re1323=0, NPquu8Re1331=0, NPquu8Re1332=0, NPquu8Re1333=0, NPquu8Re2111=0, NPquu8Re2112=0, NPquu8Re2113=0, NPquu8Re2121=0, NPquu8Re2122=0, NPquu8Re2123=0, NPquu8Re2131=0, NPquu8Re2132=0, NPquu8Re2133=0, NPquu8Re2211=0, NPquu8Re2212=0, NPquu8Re2213=0, NPquu8Re2221=0, NPquu8Re2222=0, NPquu8Re2223=0, NPquu8Re2231=0, NPquu8Re2232=0, NPquu8Re2233=0, NPquu8Re2311=0, NPquu8Re2312=0, NPquu8Re2313=0, NPquu8Re2321=0, NPquu8Re2322=0, NPquu8Re2323=0, NPquu8Re2331=0, NPquu8Re2332=0, NPquu8Re2333=0, NPquu8Re3111=0, NPquu8Re3112=0, NPquu8Re3113=0, NPquu8Re3121=0, NPquu8Re3122=0, NPquu8Re3123=0, NPquu8Re3131=0, NPquu8Re3132=0, NPquu8Re3133=0, NPquu8Re3211=0, NPquu8Re3212=0, NPquu8Re3213=0, NPquu8Re3221=0, NPquu8Re3222=0, NPquu8Re3223=0, NPquu8Re3231=0, NPquu8Re3232=0, NPquu8Re3233=0, NPquu8Re3311=0, NPquu8Re3312=0, NPquu8Re3313=0, NPquu8Re3321=0, NPquu8Re3322=0, NPquu8Re3323=0, NPquu8Re3331=0, NPquu8Re3332=0, NPquu8Re3333=0, NPuHRe11=0, NPuHRe12=0, NPuHRe13=0, NPuHRe21=0, NPuHRe22=0, NPuHRe23=0, NPuHRe31=0, NPuHRe32=0, NPuHRe33=0, NPuWRe11=0, NPuWRe12=0, NPuWRe13=0, NPuWRe21=0, NPuWRe22=0, NPuWRe23=0, NPuWRe31=0, NPuWRe32=0, NPuWRe33=0, SMHLOOP=0, WEIGHTED<=6, WEIGHTED=6, WEIGHTED=6, WEIGHTED

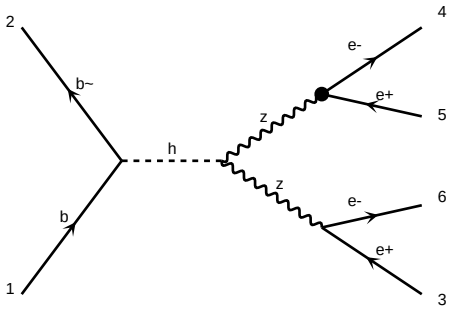

diagram 646 NP=1, NPcG=0, NPcGtil=0, NPcH=0, NPcHB=0, NPcHBtil=0, NPcHDD=0, NPcHW=0, NPcHWB=0, NPcHWtil=0, NPcHWtilB=0, NPcbH=0, NPcbW=0, NPcbWtil=0, NPcdH=0, NPcdW=0, NPcdWtil=0, NPcuH=0, NPcuW=0, NPcuWtil=0, NPlebQ=0, NPlebQtil=0, NPledq=0, NPledqtil=0, NPlequ1=0, NPlequ1til=0, NPlequ3=0, NPlequ3til=0, NPqe=0, NPqeu=0, NPqu=0, NPquqd1=0, NPquqd1til=0, NPquqd8=0, NPquqd8til=0, NPqd=0, NPqq1=0, NPqq3=0, NPtH=0, NPtW=0, NPtWtil=0, NPtbW=0, NPtbWtil=0, NPtt=0, NPtt1=0, NPtu=0, NPud=0, NPud8=0, NPuu=0, NPuu1=0, NPuuu=0, NPveW=0, NPveWtil=0, NPvebH=0, NPvebHtil=0, NPvedH=0, NPvedHtil=0, NPveuH=0, NPveuHtil=0, NPvl=0, NPvl3=0, NPvlebQ=0, NPvlebQtil=0, NPvledq=0, NPvledqtil=0, NPvlequ1=0, NPvlequ1til=0, NPvlequ3=0, NPvlequ3til=0, NPvmW=0, NPvmWtil=0, NPvmdH=0, NPvmdHtil=0, NPvmeH=0, NPvmeHtil=0, NPvmuH=0, NPvmuHtil=0, NPvq=0, NPvq3=0, NPvu=0, NPvuqd1=0, NPvuqd1til=0, NPvuqd8=0, NPvuqd8til=0, NPvveH=0, NPvveHtil=0, NPvvmH=0, NPvvmHtil=0, NPvvuH=0, NPvvuHtil=0, NPvv=0, NPvv1=0, NPvvv=0, NPveve=0, NPveve1=0, NPvevm=0, NPvevm1=0, NPvmvm=0, NPvmvm1=0, NPvmve=0, NPvmve1=0, NPvuve=0, NPvuve1=0, NPvuvm=0, NPvuvm1=0, NPvuvu=0, NPvuvu1=0, NPvvve=0, NPvvve1=0, NPvvvm=0, NPvvvm1=0, NPvvvu=0, NPvvvu1=0, NPvvvv=0, NPvvvv1=0, NPvvvv2=0, NPvvvv3=0, NPveveve=0, NPveveve1=0, NPveveve2=0, NPveveve3=0, NPvevevm=0, NPvevevm1=0, NPvevevm2=0, NPvevevm3=0, NPvevmvm=0, NPvevmvm1=0, NPvevmvm2=0, NPvevmvm3=0, NPvmvmvm=0, NPvmvmvm1=0, NPvmvmvm2=0, NPvmvmvm3=0, NPveveve4=0, NPveveve5=0, NPveveve6=0, NPveveve7=0, NPvevevm4=0, NPvevevm5=0, NPvevevm6=0, NPvevevm7=0, NPvevmvm4=0, NPvevmvm5=0, NPvevmvm6=0, NPvevmvm7=0, NPvmvmvm4=0, NPvmvmvm5=0, NPvmvmvm6=0, NPvmvmvm7=0, NPveveve8=0, NPveveve9=0, NPveveve10=0, NPveveve11=0, NPvevevm8=0, NPvevevm9=0, NPvevevm10=0, NPvevevm11=0, NPvevmvm8=0, NPvevmvm9=0, NPvevmvm10=0, NPvevmvm11=0, NPvmvmvm8=0, NPvmvmvm9=0, NPvmvmvm10=0, NPvmvmvm11=0, NPveveve12=0, NPveveve13=0, NPveveve14=0, NPveveve15=0, NPvevevm12=0, NPvevevm13=0, NPvevevm14=0, NPvevevm15=0, NPvevmvm12=0, NPvevmvm13=0, NPvevmvm14=0, NPvevmvm15=0, NPvmvmvm12=0,

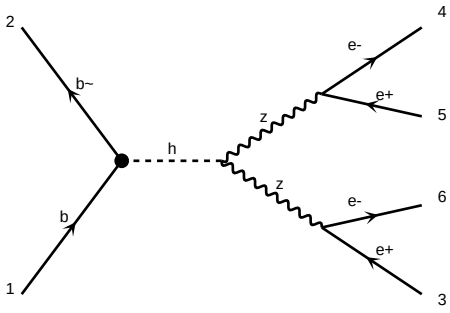

diagram 661 NP=1, NPcG=0, NPcGtil=0, NPcH=0, NPcHB=0, NPcHDD=0, NPcHW=0, NPcHWB=0, NPcW=0, NPeHB=0, NPeHW=0, NPeW=0, NPlH1=0, NPlH3=0, NPlHB=0, NPlHW=0, NPlW=0, NPqHB=0, NPqHW=0, NPqW1=0, NPqW3=0, NPuH=0, NPuW=0

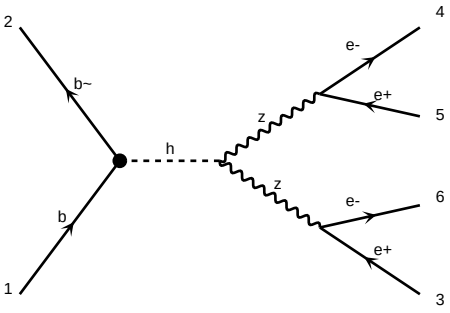

diagram 662 NP=1, NPcG=0, NPcGtil=0, NPcH=0, NPcHB=0, NPcHDD=0, NPcHW=0, NPcHWB=0, NPcW=0, NPeHB=0, NPeHW=0, NPeW=0, NPlH1=0, NPlH3=0, NPlHB=0, NPlHW=0, NPlW=0, NPqHB=0, NPqHW=0, NPqW1=0, NPqW3=0, NPuH=0, NPuW=0

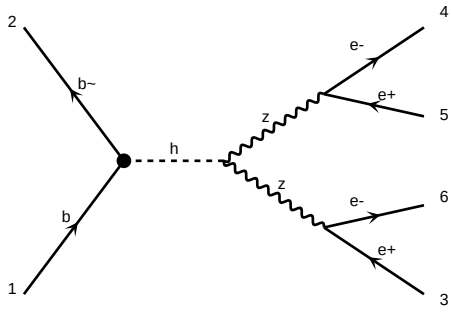

diagram 663 NP=1, NPcG=0, NPcGtil=0, NPcH=0, NPcHB=0, NPcHDD=0, NPcHW=0, NPcHWB=0, NPcW=0, NPeHB=0, NPeHW=0, NPeW=0, NPlH1=0, NPlH3=0, NPlHB=0, NPlHW=0, NPlW=0, NPqHB=0, NPqHW=0, NPqW1=0, NPqW3=0, NPuH=0, NPuW=0

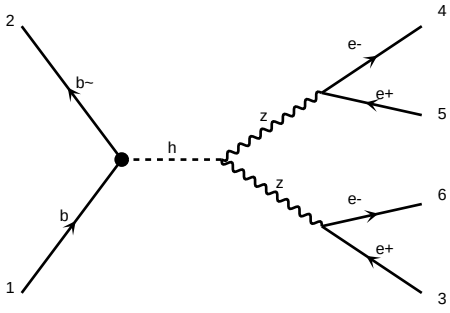

diagram 664 NP=1, NPcG=0, NPcGtil=0, NPcH=0, NPcHB=0, NPcHDD=0, NPcHW=0, NPcHWB=0, NPcW=0, NPeHB=0, NPeHW=0, NPeW=0, NPlH1=0, NPlH3=0, NPlHB=0, NPlHW=0, NPlW=0, NPqHB=0, NPqHW=0, NPqW1=0, NPqW3=0, NPuH=0, NPuW=0

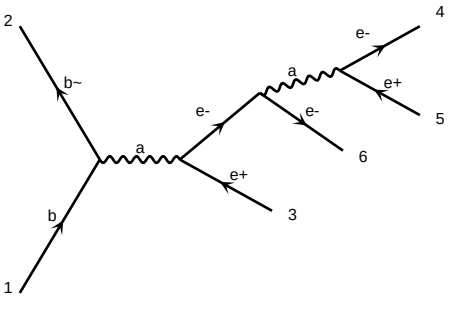

diagram 665 NP=1, NPcG=0, NPcGtil=0, NPcH=0, NPcHB=0, NPcHDD=0, NPcHW=0, NPcHWB=0, NPcW=0, NPeHB=0, NPeHW=0, NPeW=0, NPlH1=0, NPlH3=0, NPlHB=0, NPlHW=0, NPlW=0, NPqHB=0, NPqHW=0, NPqW1=0, NPqW3=0, NPuH=0, NPuW=0

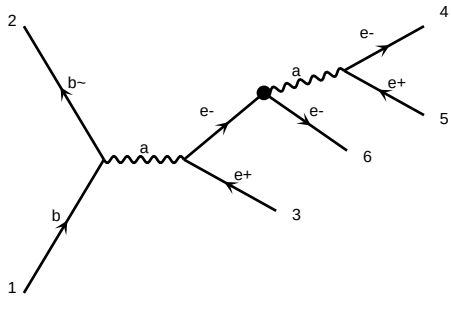

diagram 666 NP=1, NPcG=0, NPcGtil=0, NPcH=0, NPcHB=0, NPcHDD=0, NPcHW=0, NPcHWB=0, NPcW=0, NPeHB=0, NPeHW=0, NPeW=0, NPlH1=0, NPlH3=0, NPlHB=0, NPlHW=0, NPlW=0, NPqHB=0, NPqHW=0, NPqW1=0, NPqW3=0, NPuH=0, NPuW=0

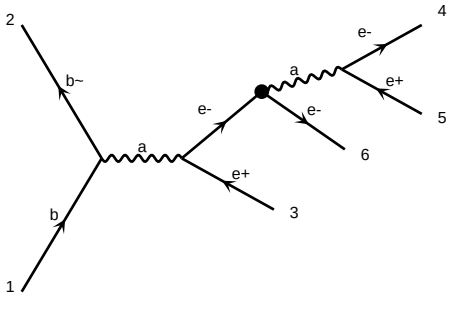

diagram 667 NP=1, NPcG=0, NPcGtil=0, NPcH=0, NPcHB=0, NPcHDD=0, NPcHW=0, NPcHWB=0, NPcW=0, NPeHB=0, NPeHW=0, NPeW=0, NPlH1=0, NPlH3=0, NPlHB=0, NPlHW=0, NPlW=0, NPqHB=0, NPqHW=0, NPqW1=0, NPqW3=0, NPuH=0, NPuW=0

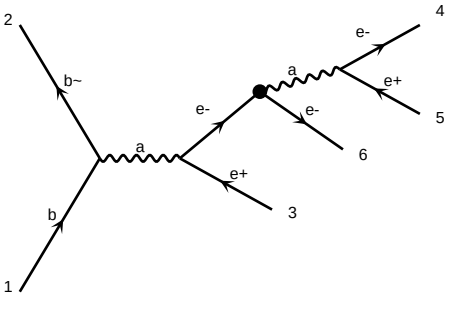

diagram 668 NP=1, NPcG=0, NPcGtil=0, NPcH=0, NPcHB=0, NPcHDD=0, NPcHW=0, NPcHWB=0, NPcW=0, NPeHB=0, NPeHW=0, NPeW=0, NPlH1=0, NPlH3=0, NPlHB=0, NPlHW=0, NPlW=0, NPqHB=0, NPqHW=0, NPqW1=0, NPqW3=0, NPuH=0, NPuW=0

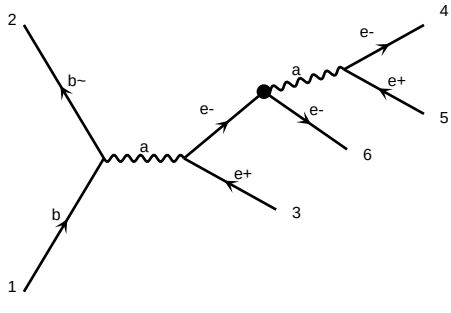

diagram 669 NP=1, NPcG=0, NPcGtil=0, NPcH=0, NPcHB=0, NPcHDD=0, NPcHW=0, NPcHWB=0, NPcW=0, NPeHB=0, NPeHW=0, NPeW=0, NPlH1=0, NPlH3=0, NPlHB=0, NPlHW=0, NPlW=0, NPqHB=0, NPqHW=0, NPqW1=0, NPqW3=0, NPuH=0, NPuW=0

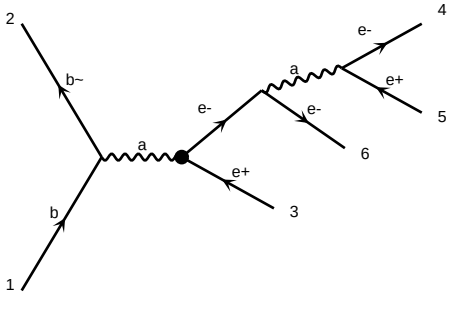

diagram 670 NP=1, NPcG=0, NPcGtil=0, NPcH=0, NPcHB=0, NPcHDD=0, NPcHW=0, NPcHWB=0, NPcW=0, NPeHB=0, NPeHW=0, NPeW=0, NPlH1=0, NPlH3=0, NPlHB=0, NPlHW=0, NPlW=0, NPqHB=0, NPqHW=0, NPqW1=0, NPqW3=0, NPuH=0, NPuW=0

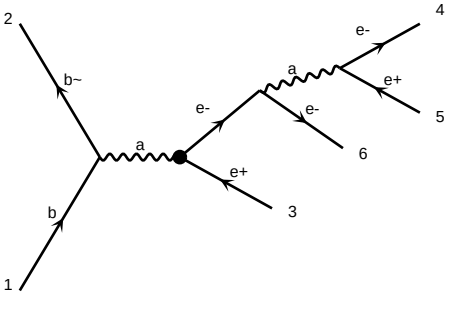

diagram 671 NP=1, NPcG=0, NPcGtil=0, NPcH=0, NPcHB=0, NPcHDD=0, NPcHW=0, NPcHWB=0, NPcW=0, NPeHB=0, NPeHW=0, NPeW=0, NPlH1=0, NPlH3=0, NPlHB=0, NPlHW=0, NPlW=0, NPqHB=0, NPqHW=0, NPqW1=0, NPqW3=0, NPuH=0, NPuW=0

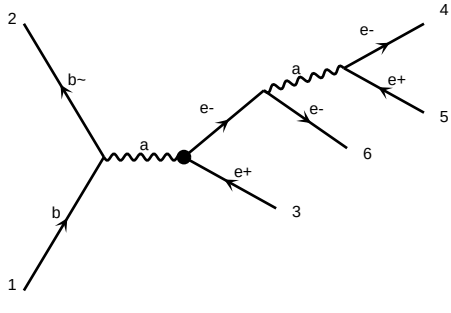

diagram 672 NP=1, NPcG=0, NPcGtil=0, NPcH=0, NPcHB=0, NPcHDD=0, NPcHW=0, NPcHWB=0, NPcW=0, NPeHB=0, NPeHW=0, NPeW=0, NPlH1=0, NPlH3=0, NPlHB=0, NPlHW=0, NPlW=0, NPqHB=0, NPqHW=0, NPqW1=0, NPqW3=0, NPuH=0, NPuW=0

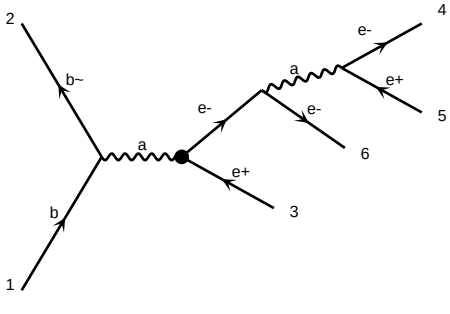

diagram 673 NP=1, NPcG=0, NPcGtil=0, NPcH=0, NPcHB=0, NPcHDD=0, NPcHW=0, NPcHWB=0, NPcW=0, NPeHB=0, NPeHW=0, NPeW=0, NPlH1=0, NPlH3=0, NPlHB=0, NPlHW=0, NPlW=0, NPqHB=0, NPqHW=0, NPqW1=0, NPqW3=0, NPuH=0, NPuW=0

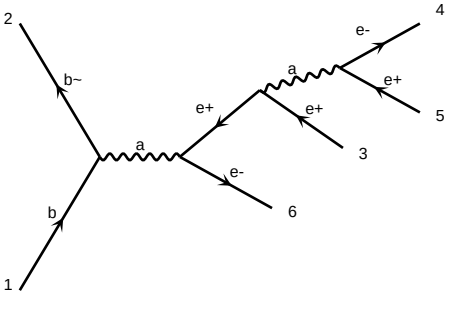

diagram 674 NP=1, NPcG=0, NPcGtil=0, NPcH=0, NPcHB=0, NPcHDD=0, NPcHW=0, NPcHWB=0, NPcW=0, NPeHB=0, NPeHW=0, NPeW=0, NPlH1=0, NPlH3=0, NPlHB=0, NPlHW=0, NPlW=0, NPqHB=0, NPqHW=0, NPqW1=0, NPqW3=0, NPuH=0, NPuW=0

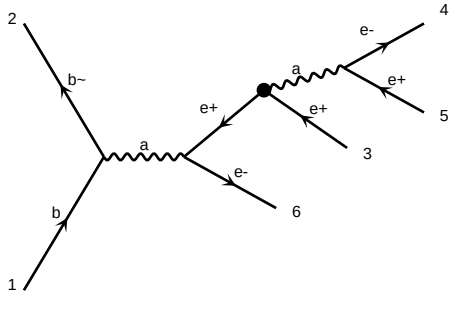

diagram 675 NP=1, NPcG=0, NPcGtil=0, NPcH=0, NPcHB=0, NPcHDD=0, NPcHW=0, NPcHWB=0, NPcW=0, NPeHB=0, NPeHW=0, NPeW=0, NPlH1=0, NPlH3=0, NPlHB=0, NPlHW=0, NPlW=0, NPqHB=0, NPqHW=0, NPqW1=0, NPqW3=0, NPuH=0, NPuW=0

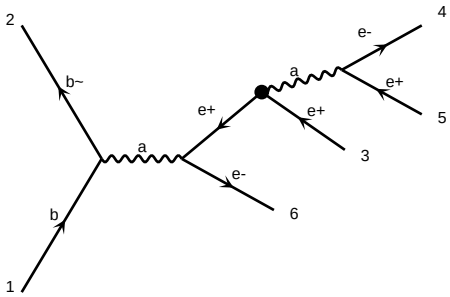

diagram 676 NP=1, NPcG=0, NPcGtil=0, NPcH=0, NPcHB=0, NPcHDD=0, NPcHW=0, NPcHWB=0, NPcW=0, NPlB=0, NPlH=0, NPlHD=0, NPlHe=0, NPlHl=0, NPlHq=0, NPlHu=0, NPlW=0, NPlWH=0, NPlWq=0, NPlu=0, NPqH=0, NPqW=0, NPuB=0, NPuG=0, NPuH=0, NPuW=0, NPHIG=0, NPHIW=0, NPHIB=0, NPHIWB=0, NPIHIG=0, NPIHIW=0, NPIHIB=0, NPIHIWB=0, NPIHDC=0, NPIHWC=0, NPIHBC=0, NPIHWBC=0, NPIHG=0, NPIHW=0, NPIHB=0, NPIHWB=0, NPIHDD=0, NPIHWW=0, NPIHBB=0, NPIHWWB=0, NPIHBBW=0, NPIHWBB=0, NPIHDW=0, NPIHDB=0, NPIHDWB=0, NPIHWW=0, NPIHBW

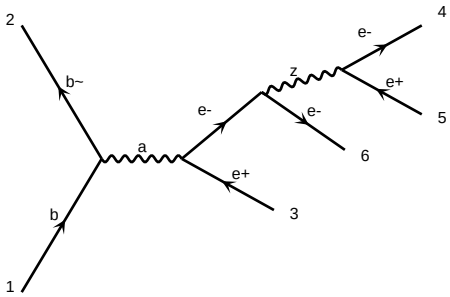

diagram 691 NP=0, NPcG=0, NPcGtil=0, NPcH=0, NPcHB=0, NPcHBtil=0, NPcHDD=0, NPcHW=0, NPcHWB=0, NPcHWtil=0, NPcHWtilB=0, NPcW=0, NPcWtil=0, NPeHB=0, NPeHW=0, NPeW=0, NPlH1=0, NPlH2=0, NPlHD=0, NPlHe=0, NPlHl=0, NPlHme=0, NPlHml=0, NPlHmt=0, NPlHt=0, NPlHte=0, NPlHtl=0, NPlHtm=0, NPlHtt=0, NPlMe=0, NPlMm=0, NPlMt=0, NPlMtau=0, NPlWe=0, NPlWm=0, NPlWt=0, NPlWtau=0, NPuG=0, NPuH=0, NPuW=0

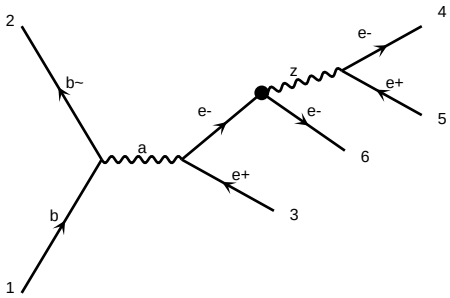

diagram 694 NP=1, NPcG=0, NPcGtil=0, NPcH=0, NPcHB=0, NPcHBtil=0, NPcHDD=0, NPcHW=0, NPcHWB=0, NPcHWtil=0, NPcHWtilB=0, NPcW=0, NPcWtil=0, NPeHB=0, NPeHW=0, NPeW=0, NPlH1=0, NPlH2=0, NPlHD=0, NPlHe=0, NPlHl=0, NPlHme=0, NPlHml=0, NPlHmt=0, NPlHt=0, NPlHte=0, NPlHtl=0, NPlHtm=0, NPlHtt=0, NPlMe=0, NPlMm=0, NPlMt=0, NPlMtau=0, NPlWe=0, NPlWm=0, NPlWt=0, NPlWtau=0, NPuG=0, NPuH=0, NPuW=0

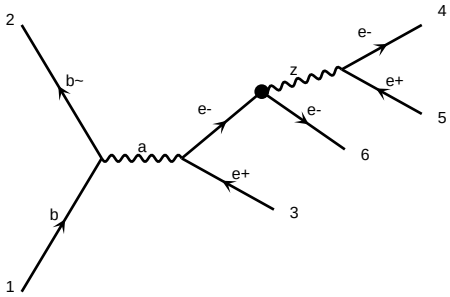

diagram 697 NP=1, NPcG=0, NPcGtil=0, NPcH=0, NPcHB=0, NPcHBtil=0, NPcHDD=0, NPcHW=0, NPcHWB=0, NPcHWtil=0, NPcHWtilB=0, NPcW=0, NPcWtil=0, NPeHB=0, NPeHW=0, NPeW=0, NPlH1=0, NPlH2=0, NPlHD=0, NPlHe=0, NPlHl=0, NPlHme=0, NPlHml=0, NPlHmt=0, NPlHt=0, NPlHte=0, NPlHtl=0, NPlHtm=0, NPlHtt=0, NPlMe=0, NPlMm=0, NPlMt=0, NPlMtau=0, NPlWe=0, NPlWm=0, NPlWt=0, NPlWtau=0, NPuG=0, NPuH=0, NPuW=0

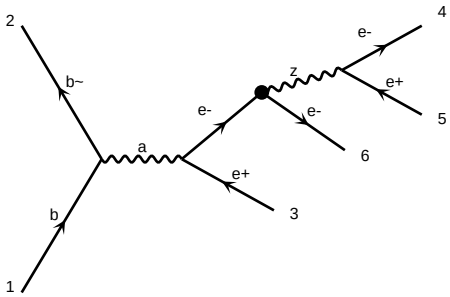

diagram 700 NP=1, NPcG=0, NPcGtil=0, NPcH=0, NPcHB=0, NPcHBtil=0, NPcHDD=0, NPcHW=0, NPcHWB=0, NPcHWtil=0, NPcHWtilB=0, NPcW=0, NPcWtil=0, NPeHB=0, NPeHW=0, NPeW=0, NPlH1=0, NPlH2=0, NPlHD=0, NPlHe=0, NPlHl=0, NPlHme=0, NPlHml=0, NPlHmt=0, NPlHt=0, NPlHte=0, NPlHtl=0, NPlHtm=0, NPlHtt=0, NPlMe=0, NPlMm=0, NPlMt=0, NPlMtau=0, NPlWe=0, NPlWm=0, NPlWt=0, NPlWtau=0, NPuG=0, NPuH=0, NPuW=0

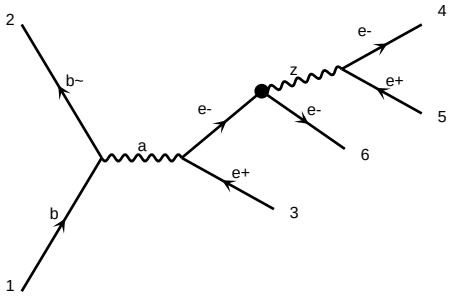

diagram 703 NP=1, NPcG=0, NPcGtil=0, NPcH=0, NPcHB=0, NPcHBtil=0, NPcHDD=0, NPcHW=0, NPcHWB=0, NPcHWtil=0, NPcHWtilB=0, NPcW=0, NPcWtil=0, NPeHB=0, NPeHW=0, NPeW=0, NPlH1=0, NPlH2=0, NPlHD=0, NPlHe=0, NPlHl=0, NPlHme=0, NPlHml=0, NPlHmt=0, NPlHt=0, NPlHte=0, NPlHtl=0, NPlHtm=0, NPlHtt=0, NPlMe=0, NPlMm=0, NPlMt=0, NPlMtau=0, NPlWe=0, NPlWm=0, NPlWt=0, NPlWtau=0, NPuG=0, NPuH=0, NPuW=0

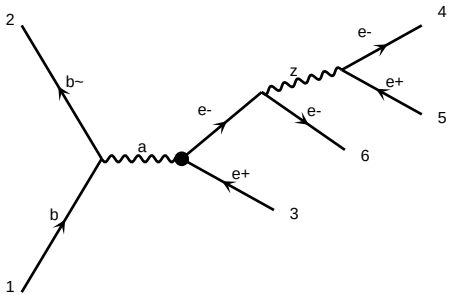

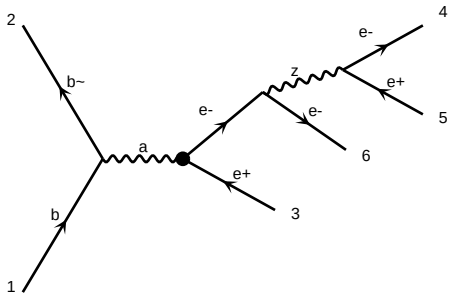

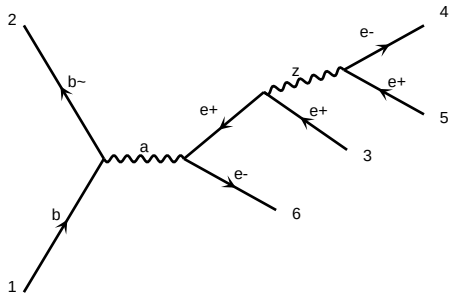

diagram 706 NP=1, NPcG=0, NPcGtil=0, NPcH=0, NPcHB=0, NPcHDD=0, NPcHW=0, NPcHWB=0, NPcW=0, NPdcHB=0, NPdcHW=0, NPeHB=0, NPeW=0, NPlH1=0, NPlH2=0, NPlHB=0, NPlHW=0, NPlebQ=0, NPlebQ3=0, NPlebQtil=0, NPleu=0, NPlu=0, NPqe=0, NPqu=0, NPquqd1=0, NPquqd8=0, NPqutil=0, NPqutil8=0, NPuG=0, NPuH=0, NPuW=0

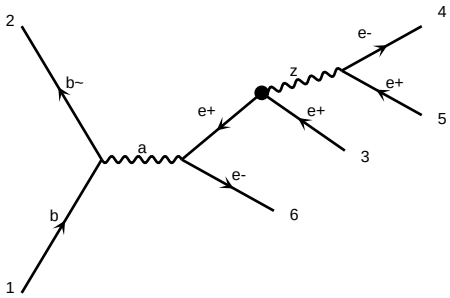

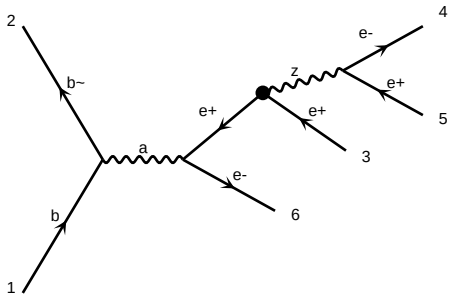

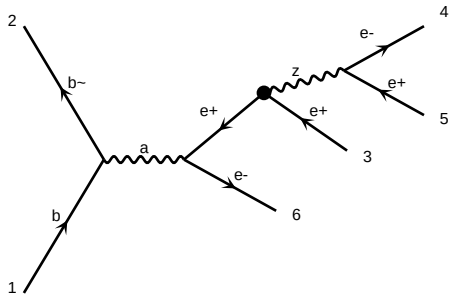

diagram 709 NP=1, NPcG=0, NPcGtil=0, NPcH=0, NPcHB=0, NPcHDD=0, NPcHW=0, NPcHWB=0, NPcW=0, NPdcHB=0, NPdcHW=0, NPeHB=0, NPeW=0, NPlH1=0, NPlH2=0, NPlHB=0, NPlHW=0, NPlebQ=0, NPlebQ3=0, NPlebQtil=0, NPleu=0, NPlu=0, NPqe=0, NPqu=0, NPquqd1=0, NPquqd8=0, NPqutil=0, NPqutil8=0, NPuG=0, NPuH=0, NPuW=0

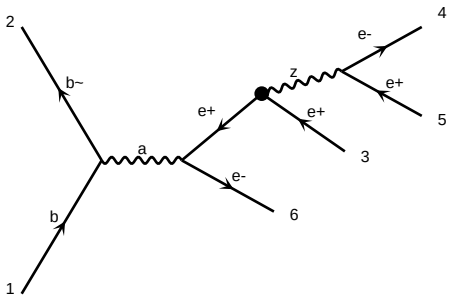

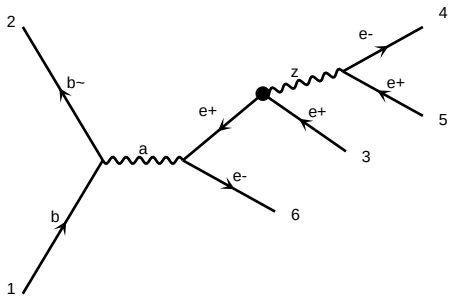

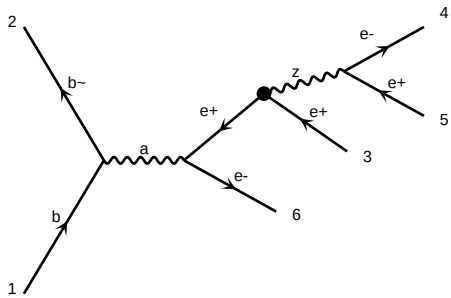

diagram 712 NP=1, NPcG=0, NPcGtil=0, NPcH=0, NPcHB=0, NPcHDD=0, NPcHW=0, NPcHWB=0, NPcW=0, NPdcHB=0, NPdcHW=0, NPeHB=0, NPeW=0, NPlH1=0, NPlH2=0, NPlHB=0, NPlHW=0, NPlebQ=0, NPlebQ3=0, NPlebQtil=0, NPleu=0, NPlu=0, NPqe=0, NPqu=0, NPquqd1=0, NPquqd8=0, NPqutil=0, NPqutil8=0, NPuG=0, NPuH=0, NPuW=0

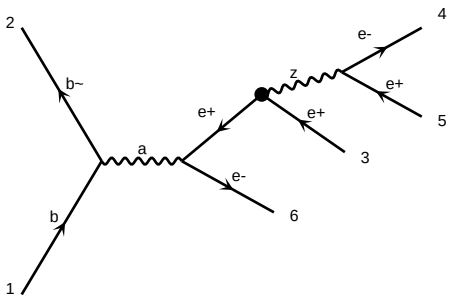

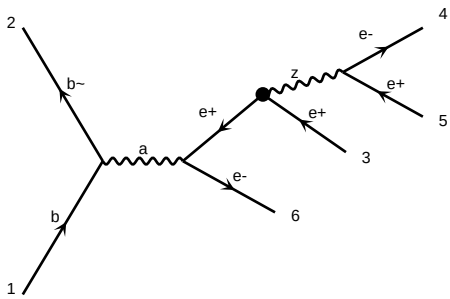

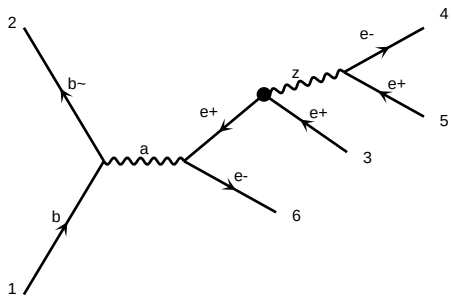

diagram 715 NP=1, NPcG=0, NPcGtil=0, NPcH=0, NPcHB=0, NPcHDD=0, NPcHW=0, NPcHWB=0, NPcW=0, NPdcHB=0, NPdcHW=0, NPeHB=0, NPeW=0, NPlH1=0, NPlH2=0, NPlHB=0, NPlHW=0, NPlebQ=0, NPlebQ3=0, NPlebQtil=0, NPleu=0, NPlu=0, NPqe=0, NPqu=0, NPquqd1=0, NPquqd8=0, NPqutil=0, NPqutil8=0, NPuG=0, NPuH=0, NPuW=0

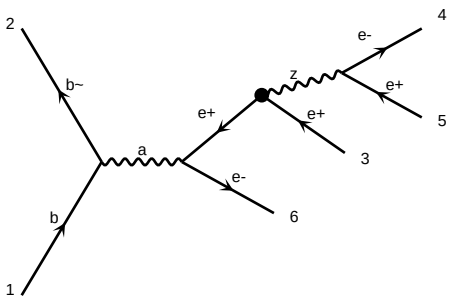

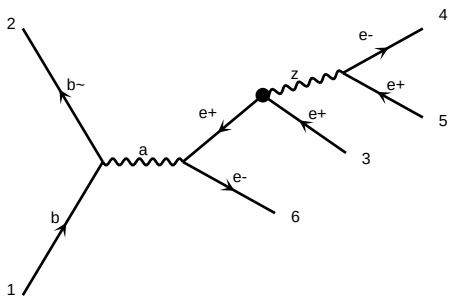

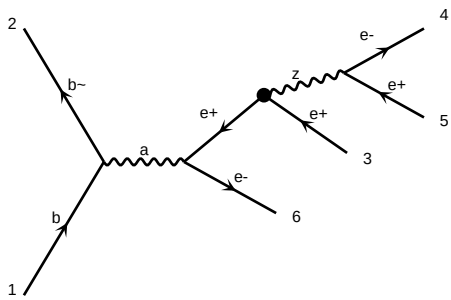

diagram 718 NP=1, NPcG=0, NPcGtil=0, NPcH=0, NPcHB=0, NPcHDD=0, NPcHW=0, NPcHWB=0, NPcW=0, NPdcHB=0, NPdcHW=0, NPeHB=0, NPeW=0, NPlH1=0, NPlH2=0, NPlHB=0, NPlHW=0, NPlebQ=0, NPlebQ3=0, NPlebQtil=0, NPleu=0, NPlu=0, NPqe=0, NPqu=0, NPquqd1=0, NPquqd8=0, NPqutil=0, NPqutil8=0, NPuG=0, NPuH=0, NPuW=0

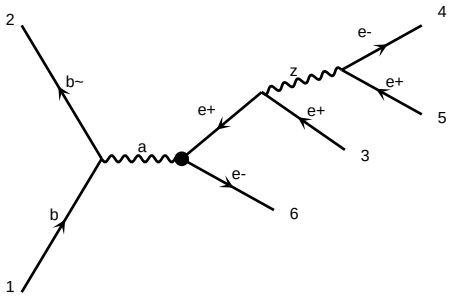

diagram 721 NP=1, NPcG=0, NPcGtil=0, NPcH=0, NPcHB=0, NPcHW=0, NPcHWB=0, NPcW=0, NPcWtil=0, NPdcHW=0, NPdcHWB=0, NPeHWB=0, NPeW=0, NPlHDD=0, NPlHE=0, NPlHL1=0, NPlHL3=0, NPlebQ=0, NPlebQ3=0, NPlebQtil=0, NPlebQtil3=0, NPlelq1=0, NPlelq3=0, NPlelqtil1=0, NPlelqtil3=0, NPlequ1=0, NPlequ3=0, NPlequtil1=0, NPlequtil3=0, NPqHD=0, NPqHQ3=0, NPqHQtil3=0, NPqHU=0, NPqHUtil=0, NPqeHU=0, NPqeHUtil=0, NPqlHD=0, NPqlHQ3=0, NPqlHQtil3=0, NPqlHU=0, NPqlHUtil=0, NPqlHUtil=0, NPqlqe1=0, NPqlqe3=0, NPqlqetil1=0, NPqlqetil3=0, NPqlql1=0, NPqlql3=0, NPqlqltil1=0, NPqlqltil3=0, NPqlqq1=0, NPqlqq3=0, NPqlqqtil1=0, NPqlqqtil3=0, NPqqe1=0, NPqqetil1=0, NPqqq1=0, NPqqq3=0, NPqqqtil1=0, NPqqqtil3=0, NPquHD=0, NPquHQ3=0, NPquHQtil3=0, NPquHU=0, NPquHUtil=0, NPquHUtil=0, NPquqe1=0, NPquqe3=0, NPquqetil1=0, NPquqetil3=0, NPquql1=0, NPquql3=0, NPquqltil1=0, NPquqltil3=0, NPquqq1=0, NPquqq3=0, NPquqqtil1=0, NPquqqtil3=0, NPuHD=0, NPuHU=0, NPuHUtil=0, NPuHUtil=0, NPuqe1=0, NPuqetil1=0, NPuqq1=0, NPuqq3=0, NPuqqtil1=0, NPuqqtil3=0, NPuuqe1=0, NPuuqetil1=0, NPuuqq1=0, NPuuqq3=0, NPuuqqtil1=0, NPuuqqtil3=0, NPuuu1=0, NPuuutil1=0, NPW=0, NPWtil

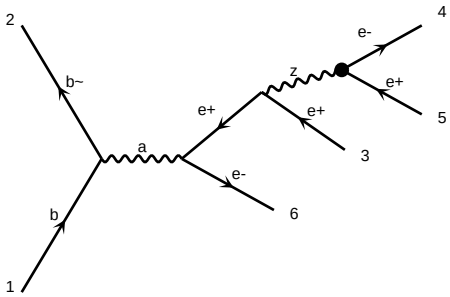

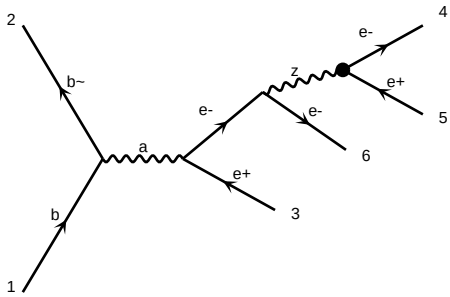

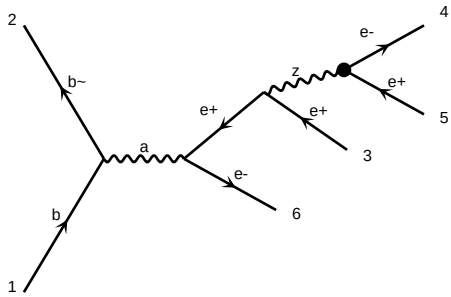

diagram 736 NP=1, NPcG=0, NPcGtil=0, NPcH=0, NPcHB=0, NPcHDD=0, NPcHW=0, NPcHWB=0, NPcW=0, NPeHB=0, NPeW=0, NPlH1=0, NPlH3=0, NPlHB=0, NPlHW=0, NPlL1=0, NPlL3=0, NPlQ1=0, NPlQ3=0, NPlebQ=0, NPleH=0, NPleW=0, NPqH=0, NPqHB=0, NPqHW=0, NPqW=0, NPuH=0, NPuW=0

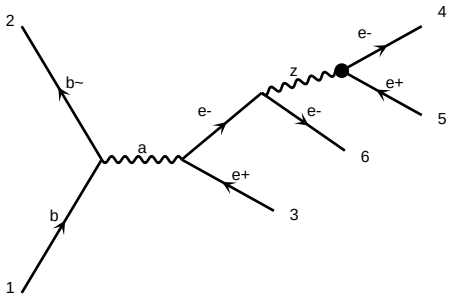

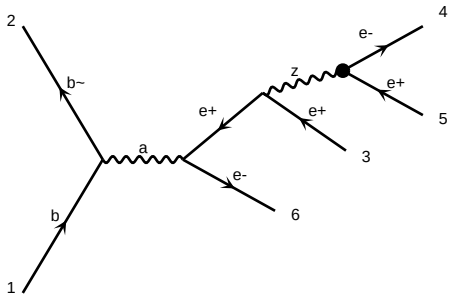

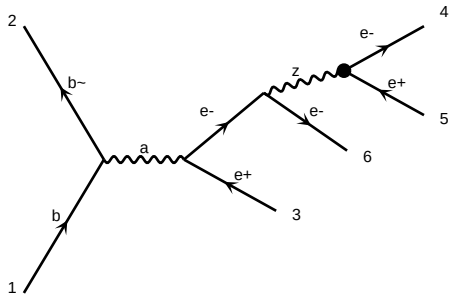

diagram 739 NP=1, NPcG=0, NPcGtil=0, NPcH=0, NPcHB=0, NPcHDD=0, NPcHW=0, NPcHWB=0, NPcW=0, NPeHB=0, NPeW=0, NPlH1=0, NPlH3=0, NPlHB=0, NPlHW=0, NPlL1=0, NPlL3=0, NPlQ1=0, NPlQ3=0, NPlebQ=0, NPleH=0, NPleW=0, NPqH=0, NPqHB=0, NPqHW=0, NPqW=0, NPuH=0, NPuW=0

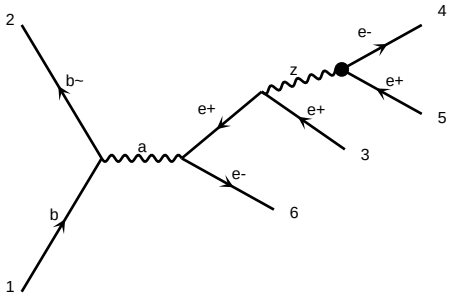

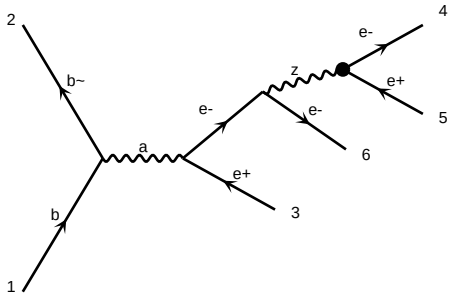

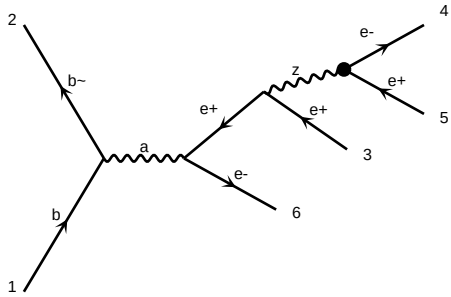

diagram 742 NP=1, NPcG=0, NPcGtil=0, NPcH=0, NPcHB=0, NPcHDD=0, NPcHW=0, NPcHWB=0, NPcW=0, NPeHB=0, NPeW=0, NPlH1=0, NPlH3=0, NPlHB=0, NPlHW=0, NPlL1=0, NPlL3=0, NPlQ1=0, NPlQ3=0, NPlebQ=0, NPleH=0, NPleW=0, NPqH=0, NPqHB=0, NPqHW=0, NPqW=0, NPuH=0, NPuW=0

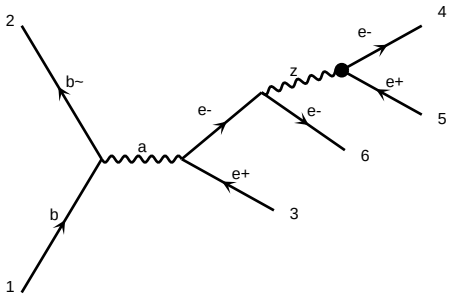

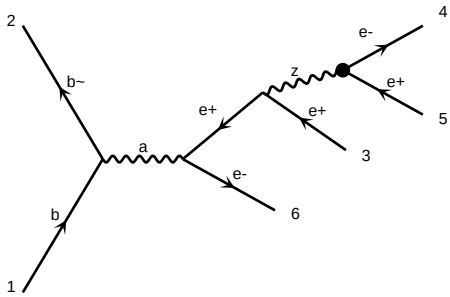

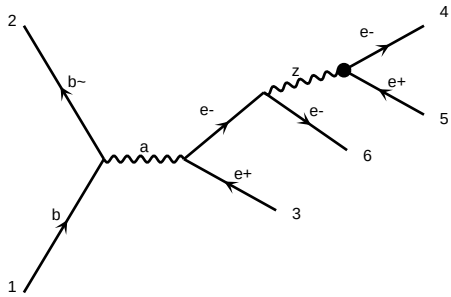

diagram 745 NP=1, NPcG=0, NPcGtil=0, NPcH=0, NPcHB=0, NPcHDD=0, NPcHW=0, NPcHWB=0, NPcW=0, NPeHB=0, NPeW=0, NPlH1=0, NPlH3=0, NPlHB=0, NPlHW=0, NPlL1=0, NPlL3=0, NPlQ1=0, NPlQ3=0, NPlebQ=0, NPleH=0, NPleW=0, NPqH=0, NPqHB=0, NPqHW=0, NPqW=0, NPuH=0, NPuW=0

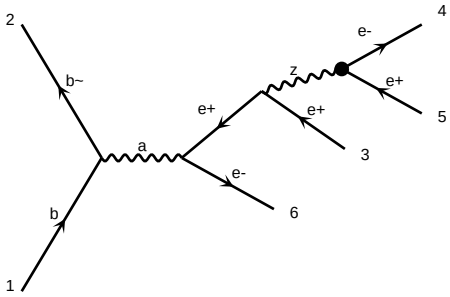

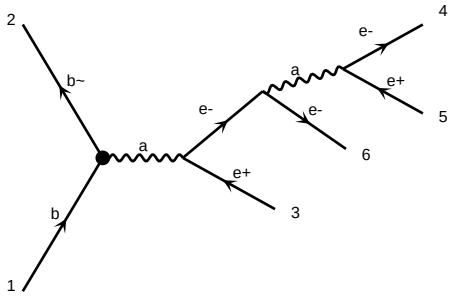

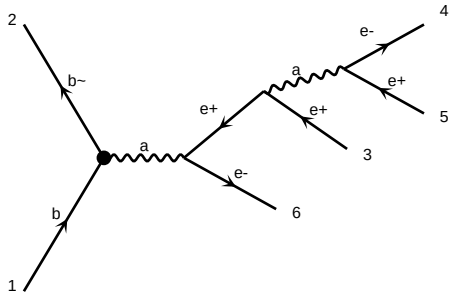

diagram 748 NP=1, NPcG=0, NPcGtil=0, NPcH=0, NPcHB=0, NPcHDD=0, NPcHW=0, NPcHWB=0, NPcW=0, NPeHB=0, NPeW=0, NPlH1=0, NPlH3=0, NPlHB=0, NPlHW=0, NPlL1=0, NPlL3=0, NPlQ1=0, NPlQ3=0, NPlebQ=0, NPleH=0, NPleW=0, NPqH=0, NPqHB=0, NPqHW=0, NPqW=0, NPuH=0, NPuW=0

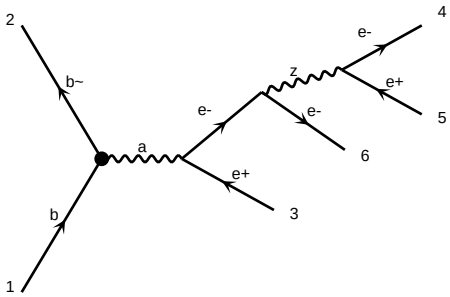

diagram 751 NP=1, NPcG=0, NPcGtil=0, NPcH=0, NPcHB=0, NPcHBtil=0, NPcHDD=0, NPcHW=0, NPcHWB=0, NPcHWtil=0, NPcHWtilB=0, NPcW=0, NPcWtil=0, NPdcHW=0, NPdcHWtil=0, NPeHB=0, NPeHW=0, NPeW=0, NPlH1=0, NPlH2=0, NPlHB=0, NPlHW=0, NPlW=0, NPuH=0, NPuW=0, NPuuVR=0, NPuuVV=0, NPveVL=0, NPveVR=0, NPvuVL=0, NPvuVR=0, NPvvVL=0, NPvvVR=0, NPvvVV=0

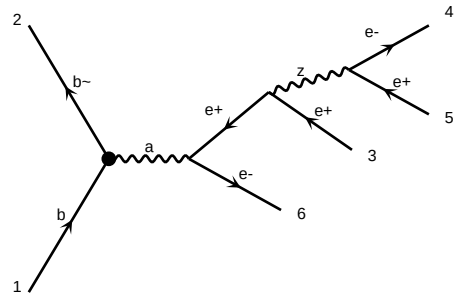

diagram 752 NP=1, NPcG=0, NPcGtil=0, NPcH=0, NPcHB=0, NPcHBtil=0, NPcHDD=0, NPcHW=0, NPcHWB=0, NPcHWtil=0, NPcHWtilB=0, NPcW=0, NPcWtil=0, NPdcHW=0, NPdcHWtil=0, NPeHB=0, NPeHW=0, NPeW=0, NPlH1=0, NPlH2=0, NPlHB=0, NPlHW=0, NPlW=0, NPuH=0, NPuW=0, NPuuVR=0, NPuuVV=0, NPveVL=0, NPveVR=0, NPvuVL=0, NPvuVR=0, NPvvVL=0, NPvvVR=0, NPvvVV=0

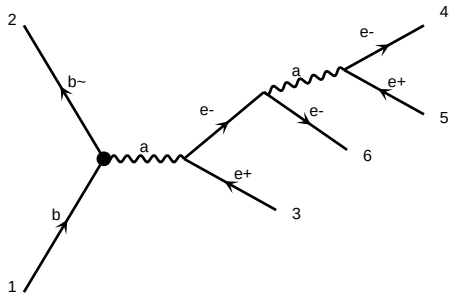

diagram 753 NP=1, NPcG=0, NPcGtil=0, NPcH=0, NPcHB=0, NPcHBtil=0, NPcHDD=0, NPcHW=0, NPcHWB=0, NPcHWtil=0, NPcHWtilB=0, NPcW=0, NPcWtil=0, NPdcHW=0, NPdcHWtil=0, NPeHB=0, NPeHW=0, NPeW=0, NPlH1=0, NPlH2=0, NPlHB=0, NPlHW=0, NPlW=0, NPuH=0, NPuW=0, NPuuVR=0, NPuuVV=0, NPveVL=0, NPveVR=0, NPvuVL=0, NPvuVR=0, NPvvVL=0, NPvvVR=0, NPvvVV=0

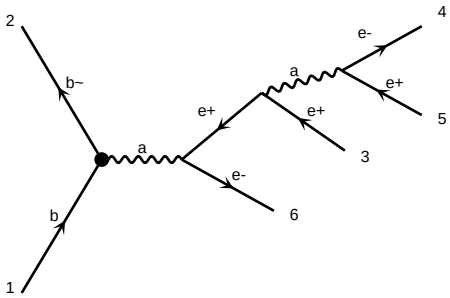

diagram 754 NP=1, NPcG=0, NPcGtil=0, NPcH=0, NPcHB=0, NPcHBtil=0, NPcHDD=0, NPcHW=0, NPcHWB=0, NPcHWtil=0, NPcHWtilB=0, NPcW=0, NPcWtil=0, NPdcHW=0, NPdcHWtil=0, NPeHB=0, NPeHW=0, NPeW=0, NPlH1=0, NPlH2=0, NPlHB=0, NPlHW=0, NPlW=0, NPuH=0, NPuW=0, NPuuVR=0, NPuuVV=0, NPveVL=0, NPveVR=0, NPvuVL=0, NPvuVR=0, NPvvVL=0, NPvvVR=0, NPvvVV=0

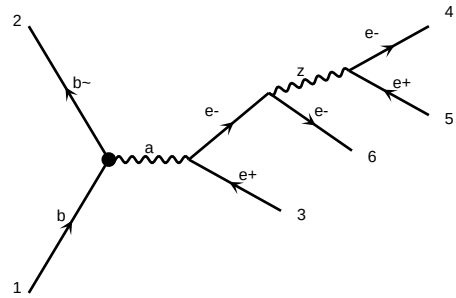

diagram 755 NP=1, NPcG=0, NPcGtil=0, NPcH=0, NPcHB=0, NPcHBtil=0, NPcHDD=0, NPcHW=0, NPcHWB=0, NPcHWtil=0, NPcHWtilB=0, NPcW=0, NPcWtil=0, NPdcHW=0, NPdcHWtil=0, NPeHB=0, NPeHW=0, NPeW=0, NPlH1=0, NPlH2=0, NPlHB=0, NPlHW=0, NPlW=0, NPuH=0, NPuW=0, NPuuVR=0, NPuuVV=0, NPveVL=0, NPveVR=0, NPvuVL=0, NPvuVR=0, NPvvVL=0, NPvvVR=0, NPvvVV=0

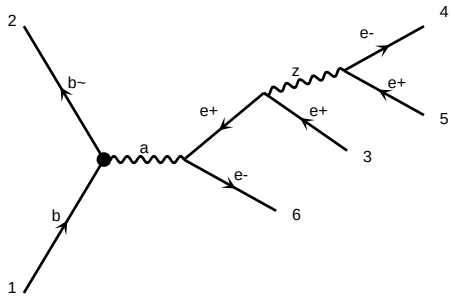

diagram 756 NP=1, NPcG=0, NPcGtil=0, NPcH=0, NPcHB=0, NPcHBtil=0, NPcHDD=0, NPcHW=0, NPcHWB=0, NPcHWtil=0, NPcHWtilB=0, NPcW=0, NPcWtil=0, NPdcHW=0, NPdcHWtil=0, NPeHB=0, NPeHW=0, NPeW=0, NPlH1=0, NPlH2=0, NPlHB=0, NPlHW=0, NPlW=0, NPuH=0, NPuW=0, NPuuVR=0, NPuuVV=0, NPveVL=0, NPveVR=0, NPvuVL=0, NPvuVR=0, NPvvVL=0, NPvvVR=0, NPvvVV=0

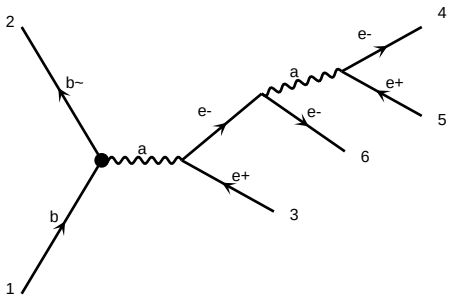

diagram 757 NP=1, NPcG=0, NPcGtil=0, NPcH=0, NPcHB=0, NPcHBtil=0, NPcHDD=0, NPcHW=0, NPcHWB=0, NPcHWtil=0, NPcHWtilB=0, NPcW=0, NPcWtil=0, NPdcHW=0, NPdcHWtil=0, NPeHB=0, NPeHW=0, NPeW=0, NPlH1=0, NPlH2=0, NPlHB=0, NPlHW=0, NPlW=0, NPuH=0, NPuW=0, NPuuVR=0, NPuuVV=0, NPveVL=0, NPveVR=0, NPvuVL=0, NPvuVR=0, NPvvVL=0, NPvvVR=0, NPvvVV=0

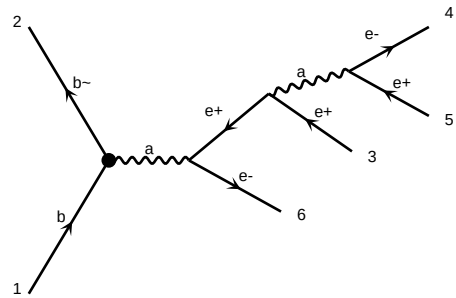

diagram 758 NP=1, NPcG=0, NPcGtil=0, NPcH=0, NPcHB=0, NPcHBtil=0, NPcHDD=0, NPcHW=0, NPcHWB=0, NPcHWtil=0, NPcHWtilB=0, NPcW=0, NPcWtil=0, NPdcHW=0, NPdcHWtil=0, NPeHB=0, NPeHW=0, NPeW=0, NPlH1=0, NPlH2=0, NPlHB=0, NPlHW=0, NPlW=0, NPuH=0, NPuW=0, NPuuVR=0, NPuuVV=0, NPveVL=0, NPveVR=0, NPvuVL=0, NPvuVR=0, NPvvVL=0, NPvvVR=0, NPvvVV=0

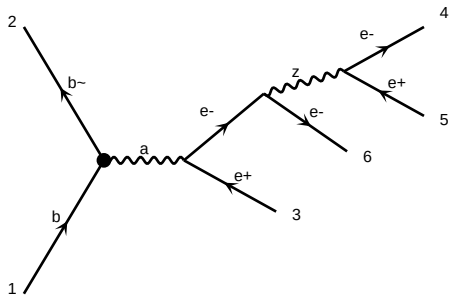

diagram 759 NP=1, NPcG=0, NPcGtil=0, NPcH=0, NPcHB=0, NPcHBtil=0, NPcHDD=0, NPcHW=0, NPcHWB=0, NPcHWtil=0, NPcHWtilB=0, NPcW=0, NPcWtil=0, NPdcHW=0, NPdcHWtil=0, NPeHB=0, NPeHW=0, NPeW=0, NPlH1=0, NPlH2=0, NPlHB=0, NPlHW=0, NPlW=0, NPuH=0, NPuW=0, NPuuVR=0, NPuuVV=0, NPveVL=0, NPveVR=0, NPvuVL=0, NPvuVR=0, NPvvVL=0, NPvvVR=0, NPvvVV=0

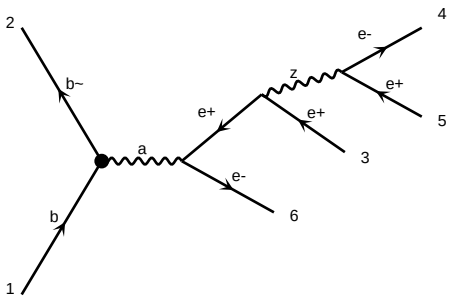

diagram 760 NP=1, NPcG=0, NPcGtil=0, NPcH=0, NPcHB=0, NPcHBtil=0, NPcHDD=0, NPcHW=0, NPcHWB=0, NPcHWtil=0, NPcHWtilB=0, NPcW=0, NPcWtil=0, NPdcHW=0, NPdcHWtil=0, NPeHB=0, NPeHW=0, NPeW=0, NPlH1=0, NPlH2=0, NPlHB=0, NPlHW=0, NPlW=0, NPuH=0, NPuW=0, NPuuVR=0, NPuuVV=0, NPveVL=0, NPveVR=0, NPvuVL=0, NPvuVR=0, NPvvVL=0, NPvvVR=0, NPvvVV=0

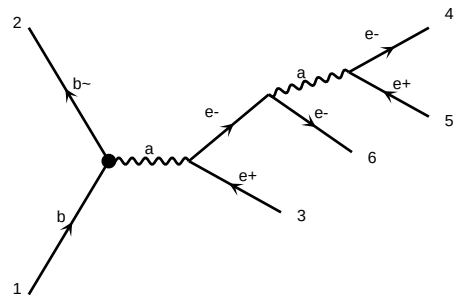

diagram 761 NP=1, NPcG=0, NPcGtil=0, NPcH=0, NPcHB=0, NPcHBtil=0, NPcHDD=0, NPcHW=0, NPcHWB=0, NPcHWtil=0, NPcHWtilB=0, NPcW=0, NPcWtil=0, NPdcHW=0, NPdcHWtil=0, NPeHB=0, NPeHW=0, NPeW=0, NPlH1=0, NPlH2=0, NPlHB=0, NPlHW=0, NPlW=0, NPuH=0, NPuW=0, NPuuVR=0, NPuuVV=0, NPveVL=0, NPveVR=0, NPvuVL=0, NPvuVR=0, NPvvVL=0, NPvvVR=0, NPvvVV=0

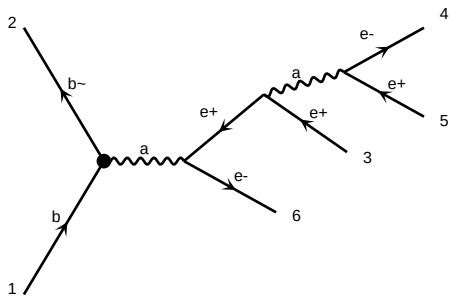

diagram 762 NP=1, NPcG=0, NPcGtil=0, NPcH=0, NPcHB=0, NPcHBtil=0, NPcHDD=0, NPcHW=0, NPcHWB=0, NPcHWtil=0, NPcHWtilB=0, NPcW=0, NPcWtil=0, NPdcHW=0, NPdcHWtil=0, NPeHB=0, NPeHW=0, NPeW=0, NPlH1=0, NPlH2=0, NPlHB=0, NPlHW=0, NPlW=0, NPuH=0, NPuW=0, NPuuVR=0, NPuuVV=0, NPveVL=0, NPveVR=0, NPvuVL=0, NPvuVR=0, NPvvVL=0, NPvvVR=0, NPvvVV=0

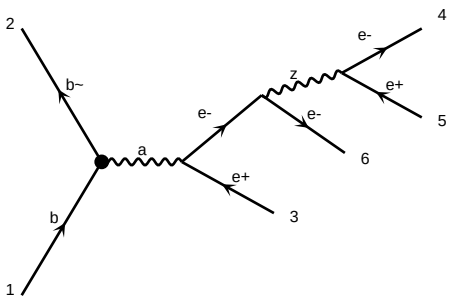

diagram 763 NP=1, NPcG=0, NPcGtil=0, NPcH=0, NPcHB=0, NPcHBtil=0, NPcHDD=0, NPcHW=0, NPcHWB=0, NPcHWtil=0, NPcHWtilB=0, NPcW=0, NPcWtil=0, NPdcHW=0, NPdcHWtil=0, NPeHB=0, NPeHW=0, NPeW=0, NPlH1=0, NPlH2=0, NPlHB=0, NPlHW=0, NPlW=0, NPuH=0, NPuW=0, NPuuVR=0, NPuuVV=0, NPveVL=0, NPveVR=0, NPvuVL=0, NPvuVR=0, NPvvVL=0, NPvvVR=0, NPvvVV=0

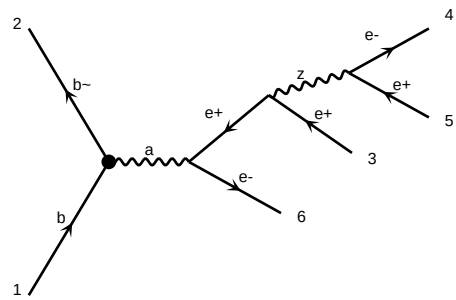

diagram 764 NP=1, NPcG=0, NPcGtil=0, NPcH=0, NPcHB=0, NPcHBtil=0, NPcHDD=0, NPcHW=0, NPcHWB=0, NPcHWtil=0, NPcHWtilB=0, NPcW=0, NPcWtil=0, NPdcHW=0, NPdcHWtil=0, NPeHB=0, NPeHW=0, NPeW=0, NPlH1=0, NPlH2=0, NPlHB=0, NPlHW=0, NPlW=0, NPuH=0, NPuW=0, NPuuVR=0, NPuuVV=0, NPveVL=0, NPveVR=0, NPvuVL=0, NPvuVR=0, NPvvVL=0, NPvvVR=0, NPvvVV=0

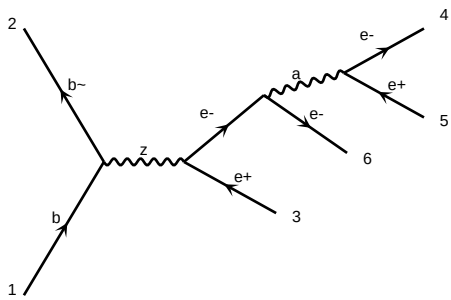

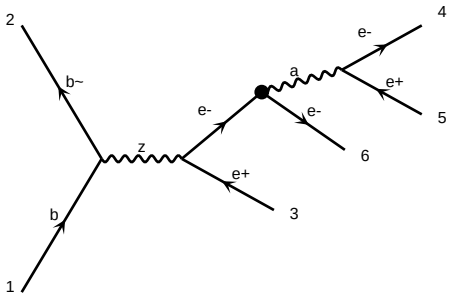

diagram 766 NP=1, NPcG=0, NPcGtil=0, NPcH=0, NPcHB=0, NPcHBtil=0, NPcHDD=0, NPcHW=0, NPcHWB=0, NPcHWtil=0, NPcHbox=0, NPcbH=0, NPcbW=0, NPcdH=0, NPcdW=0, NPceH=0, NPceW=0, NPcuH=0, NPcuW=0, NPlebQ=0, NPledq=0, NPlequ1=0, NPlequ3=0, NPll=0, NPllQ=0, NPlu=0, NPld=0, NPlQ=0, NPqe=0, NPqu1=0, NPqu8=0, NPqd1=0, NPqd8=0, NPqQ1=0, NPqQ3=0, NPuu=0, NPud1=0, NPud8=0, NPdd=0, NPQu1=0, NPQu8=0, NPQd1=0, NPQd8=0, NPQQ1=0, NPQQ3=0, NPQe=0, NPeu=0, NPed=0, NPee=0, NPuG=0, NPdG=0, NPeB=0, NPuB=0, NPdB=0, NPeW=0, NPuW=0, NPdW=0, NPuH=0, NPdH=0, NPeH=0, NPHud=0, NPHQ1=0, NPHQ3=0, NPHe=0, NPHu=0, NPHd=0, NPHudtil=0, NPHQ3til=0, NPHWB=0, NPHWBtil=0, NPHB=0, NPHBtil=0, NPHW=0, NPHWtil=0, NPHl1=0, NPHl3

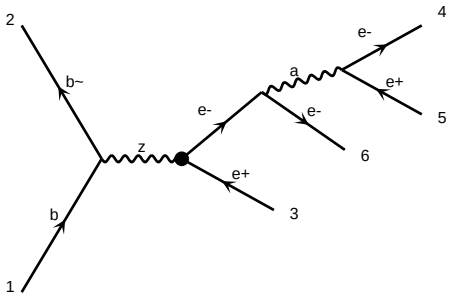

diagram 781 NP=1, NPcG=0, NPcGtil=0, NPcH=0, NPcHB=0, NPcHW=0, NPcHWB=0, NPcW=0, NPcWtil=0, NPdcHB=0, NPdcHW=0, NPeHB=0, NPeHW=0, NPeW=0, NPlH1=0, NPlH2=0, NPlHB=0, NPlHW=0, NPlL1=0, NPlL2=0, NPlQ1=0, NPlQ3=0, NPlebQ=0, NPledQ=0, NPlelL=0, NPlelQ=0, NPlequ1=0, NPlequ3=0, NPqG=0, NPqH=0, NPquG=0, NPquH=0, NPqW=0, NPuH=0, NPuW=0, NPHDD=0 QED=3, QNP=2 WEIGHTED=5

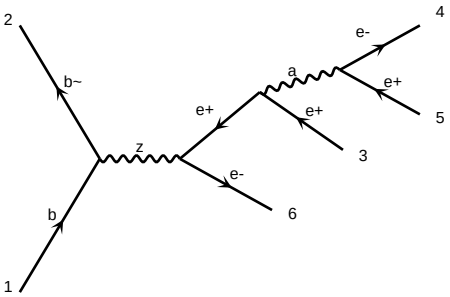

diagram 782 NP=1, NPcG=0, NPcGtil=0, NPcH=0, NPcHB=0, NPcHW=0, NPcHWB=0, NPcW=0, NPcWtil=0, NPdcHB=0, NPdcHW=0, NPeHB=0, NPeHW=0, NPeW=0, NPlH1=0, NPlH2=0, NPlHB=0, NPlHW=0, NPlL1=0, NPlL2=0, NPlQ1=0, NPlQ3=0, NPlebQ=0, NPledQ=0, NPlelL=0, NPlelQ=0, NPlequ1=0, NPlequ3=0, NPqG=0, NPqH=0, NPquG=0, NPquH=0, NPqW=0, NPuH=0, NPuW=0, NPHDD=0 QED=3, QNP=2 WEIGHTED=5

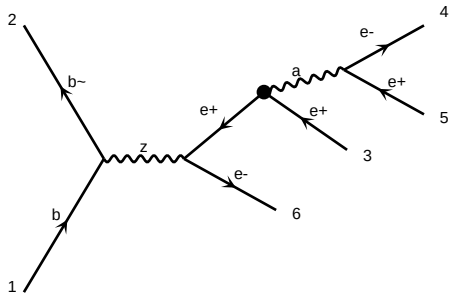

diagram 783 NP=1, NPcG=0, NPcGtil=0, NPcH=0, NPcHB=0, NPcHW=0, NPcHWB=0, NPcW=0, NPcWtil=0, NPdcHB=0, NPdcHW=0, NPeHB=0, NPeHW=0, NPeW=0, NPlH1=0, NPlH2=0, NPlHB=0, NPlHW=0, NPlL1=0, NPlL2=0, NPlQ1=0, NPlQ3=0, NPlebQ=0, NPledQ=0, NPlelL=0, NPlelQ=0, NPlequ1=0, NPlequ3=0, NPqG=0, NPqH=0, NPquG=0, NPquH=0, NPqW=0, NPuH=0, NPuW=0, NPHDD=0 QED=3, QNP=2 WEIGHTED=5

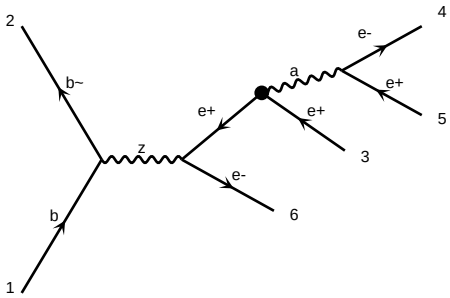

diagram 784 NP=1, NPcG=0, NPcGtil=0, NPcH=0, NPcHB=0, NPcHW=0, NPcHWB=0, NPcW=0, NPcWtil=0, NPdcHB=0, NPdcHW=0, NPeHB=0, NPeHW=0, NPeW=0, NPlH1=0, NPlH2=0, NPlHB=0, NPlHW=0, NPlL1=0, NPlL2=0, NPlQ1=0, NPlQ3=0, NPlebQ=0, NPledQ=0, NPlelL=0, NPlelQ=0, NPlequ1=0, NPlequ3=0, NPqG=0, NPqH=0, NPquG=0, NPquH=0, NPqW=0, NPuH=0, NPuW=0, NPHDD=0 QED=3, QNP=2 WEIGHTED=5

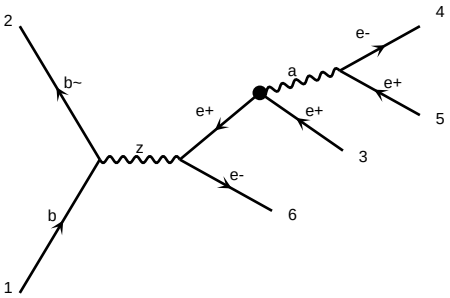

diagram 785 NP=1, NPcG=0, NPcGtil=0, NPcH=0, NPcHB=0, NPcHW=0, NPcHWB=0, NPcW=0, NPcWtil=0, NPdcHB=0, NPdcHW=0, NPeHB=0, NPeHW=0, NPeW=0, NPlH1=0, NPlH2=0, NPlHB=0, NPlHW=0, NPlL1=0, NPlL2=0, NPlQ1=0, NPlQ3=0, NPlebQ=0, NPledQ=0, NPlelL=0, NPlelQ=0, NPlequ1=0, NPlequ3=0, NPqG=0, NPqH=0, NPquG=0, NPquH=0, NPqW=0, NPuH=0, NPuW=0, NPHDD=0 QED=3, QNP=2 WEIGHTED=5

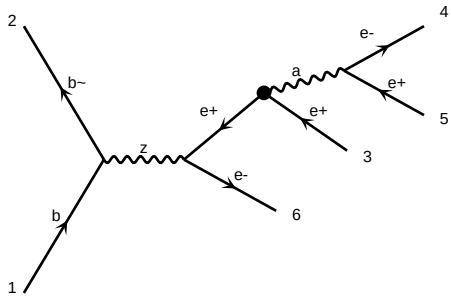

diagram 786 NP=1, NPcG=0, NPcGtil=0, NPcH=0, NPcHB=0, NPcHW=0, NPcHWB=0, NPcW=0, NPcWtil=0, NPdcHB=0, NPdcHW=0, NPeHB=0, NPeHW=0, NPeW=0, NPlH1=0, NPlH2=0, NPlHB=0, NPlHW=0, NPlL1=0, NPlL2=0, NPlQ1=0, NPlQ3=0, NPlebQ=0, NPledQ=0, NPlelL=0, NPlelQ=0, NPlequ1=0, NPlequ3=0, NPqG=0, NPqH=0, NPquG=0, NPquH=0, NPqW=0, NPuH=0, NPuW=0, NPHDD=0 QED=3, QNP=2 WEIGHTED=5

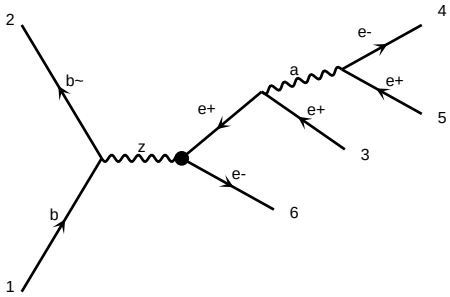

diagram 787 NP=1, NPcG=0, NPcGtil=0, NPcH=0, NPcHB=0, NPcHW=0, NPcHWB=0, NPcW=0, NPcWtil=0, NPdcHB=0, NPdcHW=0, NPeHB=0, NPeHW=0, NPeW=0, NPlH1=0, NPlH2=0, NPlHB=0, NPlHW=0, NPlL1=0, NPlL2=0, NPlQ1=0, NPlQ3=0, NPlebQ=0, NPledQ=0, NPlelL=0, NPlelQ=0, NPlequ1=0, NPlequ3=0, NPqG=0, NPqH=0, NPquG=0, NPquH=0, NPqW=0, NPuH=0, NPuW=0, NPHDD=0 QED=3, QNP=2 WEIGHTED=5

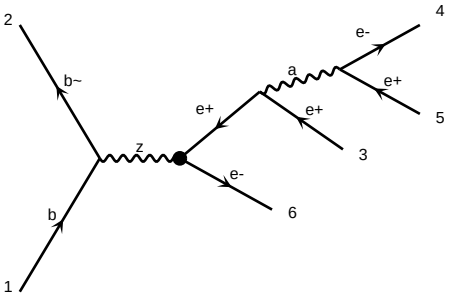

diagram 788 NP=1, NPcG=0, NPcGtil=0, NPcH=0, NPcHB=0, NPcHW=0, NPcHWB=0, NPcW=0, NPcWtil=0, NPdcHB=0, NPdcHW=0, NPeHB=0, NPeHW=0, NPeW=0, NPlH1=0, NPlH2=0, NPlHB=0, NPlHW=0, NPlL1=0, NPlL2=0, NPlQ1=0, NPlQ3=0, NPlebQ=0, NPledQ=0, NPlelL=0, NPlelQ=0, NPlequ1=0, NPlequ3=0, NPqG=0, NPqH=0, NPquG=0, NPquH=0, NPqW=0, NPuH=0, NPuW=0, NPHDD=0 QED=3, QNP=2 WEIGHTED=5

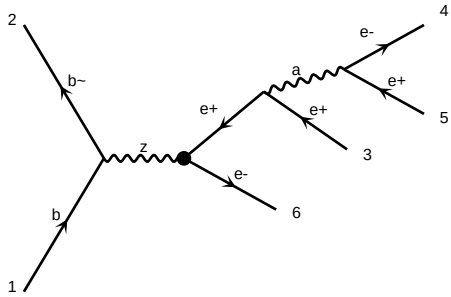

diagram 789 NP=1, NPcG=0, NPcGtil=0, NPcH=0, NPcHB=0, NPcHW=0, NPcHWB=0, NPcW=0, NPcWtil=0, NPdcHB=0, NPdcHW=0, NPeHB=0, NPeHW=0, NPeW=0, NPlH1=0, NPlH2=0, NPlHB=0, NPlHW=0, NPlL1=0, NPlL2=0, NPlQ1=0, NPlQ3=0, NPlebQ=0, NPledQ=0, NPlelL=0, NPlelQ=0, NPlequ1=0, NPlequ3=0, NPqG=0, NPqH=0, NPquG=0, NPquH=0, NPqW=0, NPuH=0, NPuW=0, NPHDD=0 QED=3, QNP=2 WEIGHTED=5

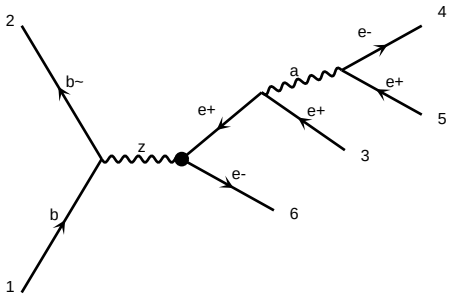

diagram 790 NP=1, NPcG=0, NPcGtil=0, NPcH=0, NPcHB=0, NPcHW=0, NPcHWB=0, NPcW=0, NPcWtil=0, NPdcHB=0, NPdcHW=0, NPeHB=0, NPeHW=0, NPeW=0, NPlH1=0, NPlH2=0, NPlHB=0, NPlHW=0, NPlL1=0, NPlL2=0, NPlQ1=0, NPlQ3=0, NPlebQ=0, NPledQ=0, NPlelL=0, NPlelQ=0, NPlequ1=0, NPlequ3=0, NPqG=0, NPqH=0, NPquG=0, NPquH=0, NPqW=0, NPuH=0, NPuW=0, NPHDD=0 QED=3, QNP=2 WEIGHTED=5

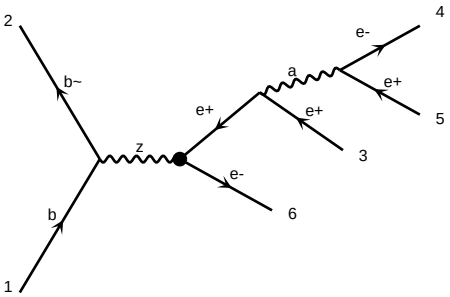

diagram 791 NP=1, NPcG=0, NPcGtil=0, NPcH=0, NPcHB=0, NPcHW=0, NPcHWB=0, NPcW=0, NPcWtil=0, NPdcHB=0, NPdcHW=0, NPeHB=0, NPeHW=0, NPeW=0, NPlH1=0, NPlH2=0, NPlHB=0, NPlHW=0, NPlL1=0, NPlL2=0, NPlQ1=0, NPlQ3=0, NPlebQ=0, NPledQ=0, NPlelL=0, NPlelQ=0, NPlequ1=0, NPlequ3=0, NPqG=0, NPqH=0, NPquG=0, NPquH=0, NPqW=0, NPuH=0, NPuW=0, NPHDD=0 QED=3, QNP=2 WEIGHTED=5

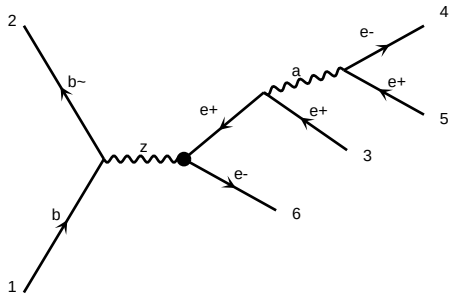

diagram 792 NP=1, NPcG=0, NPcGtil=0, NPcH=0, NPcHB=0, NPcHW=0, NPcHWB=0, NPcW=0, NPcWtil=0, NPdcHB=0, NPdcHW=0, NPeHB=0, NPeHW=0, NPeW=0, NPlH1=0, NPlH2=0, NPlHB=0, NPlHW=0, NPlL1=0, NPlL2=0, NPlQ1=0, NPlQ3=0, NPlebQ=0, NPledQ=0, NPlelL=0, NPlelQ=0, NPlequ1=0, NPlequ3=0, NPqG=0, NPqH=0, NPquG=0, NPquH=0, NPqW=0, NPuH=0, NPuW=0, NPHDD=0 QED=3, QNP=2 WEIGHTED=5

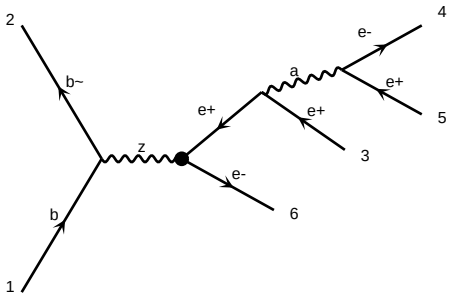

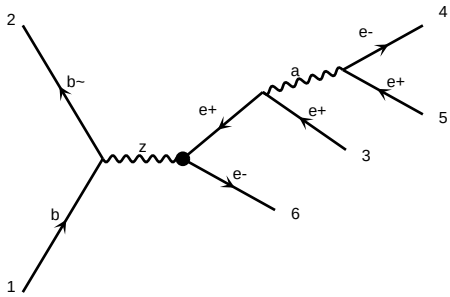

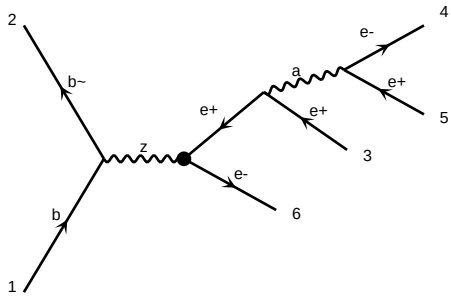

diagram 796 NP=1, NPcG=0, NPcGtil=0, NPcH=0, NPcHB=0, NPcHDD=1, NPcHW=0, NPcHWB=0, NPcW=0, NPdcHBtil=0, NPdcHWtil=0, NPeHDD=0, NPeHWB=0, NPeW=0, NPlH1=0, NPlH2=0, NPlHB=0, NPlHW=0, NPlebQ3=0, NPledjQ=0, NPlelQ1=0, NPlelQ3=0, NPlequ1=0, NPlequ3=0, NPqHDD=0, NPqHWB=0, NPqW=0, NPquHB=0, NPquHW=0, NPquqd1=0, NPquqd8=0, NPqujQ1=0, NPqujQ3=0, NPqujQ8=0, NPuHDD=0, NPuHWB=0, NPuW=0, NPuedQ=0, NPuelQ=0, NPuequ1=0, NPuequ3=0, NPuqdQ1=0, NPuqdQ8=0, NPuuQ1=0, NPuuQ8=0, NPdHDD=0, NPdHWB=0, NPdW=0, NPdedQ=0, NPdeQ=0, NPdequ1=0, NPdequ3=0, NPdqQ1=0, NPdqQ8=0, NPddQ1=0, NPddQ8=0, NPlHDD=0, NPlHWB=0, NPlW=0, NPlebQ=0, NPledQ=0, NPlelQ=0, NPlequ=0, NPlqQ1=0, NPlqQ3=0, NPllQ1=0, NPllQ3=0, NPqHDD=0, NPqHWB=0, NPqW=0, NPqeQ=0, NPqequ=0, NPqqQ1=0, NPqqQ3=0, NPqqQ8=0, NPqQ1=0, NPqQ3=0, NPqQ8=0, NPuHDD=0, NPuHWB=0, NPuW=0, NPueQ=0, NPuequ=0, NPuuQ=0, NPdHDD=0, NPdHWB=0, NPdW=0, NPdeQ=0, NPdequ=0, NPddQ=0, NPlHDD=0, NPlHWB=0, NPlW=0, NPleQ=0, NPlequ=0, NPllQ=0, NPqHDD=0, NPqHWB=0, NPqW=0, NPqeQ=0, NPqequ=0, NPqqQ=0, NPqQ

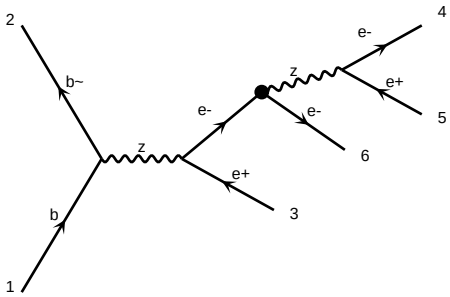

diagram 811 NP=1, NPcG=0, NPcGtil=0, NPcH=0, NPcHB=0, NPcHDD=0, NPcHW=0, NPcHWB=0, NPcW=0, NPdcHW=0, NPdcHWB=0, NPeHD=0, NPeW=0, NPlH1=0, NPlH2=0, NPlHD=0, NPlW=0, NPqH=0, NPqHD=0, NPqW=0, NPuH=0, NPuW=0

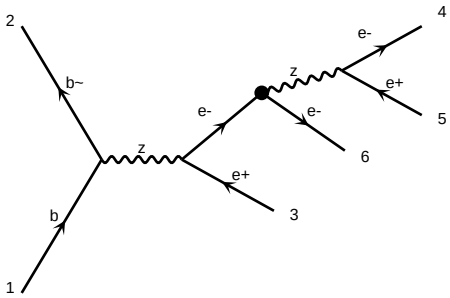

diagram 814 NP=1, NPcG=0, NPcGtil=0, NPcH=0, NPcHB=0, NPcHDD=0, NPcHW=0, NPcHWB=0, NPcW=0, NPdcHW=0, NPdcHWB=0, NPeHD=0, NPeW=0, NPlH1=0, NPlH2=0, NPlHD=0, NPlW=0, NPqH=0, NPqHD=0, NPqW=0, NPuH=0, NPuW=0

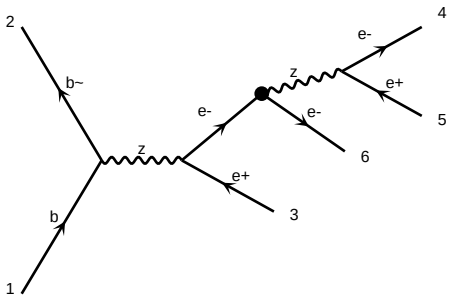

diagram 817 NP=1, NPcG=0, NPcGtil=0, NPcH=0, NPcHB=0, NPcHDD=0, NPcHW=0, NPcHWB=0, NPcW=0, NPdcHW=0, NPdcHWB=0, NPeHD=0, NPeW=0, NPlH1=0, NPlH2=0, NPlHD=0, NPlW=0, NPqH=0, NPqHD=0, NPqW=0, NPuH=0, NPuW=0

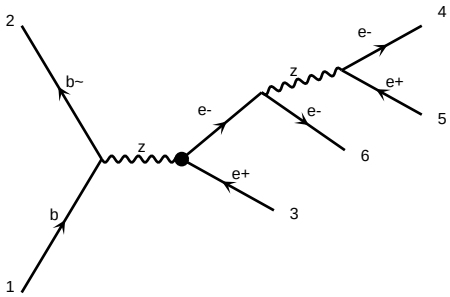

diagram 820 NP=1, NPcG=0, NPcGtil=0, NPcH=0, NPcHB=0, NPcHDD=0, NPcHW=0, NPcHWB=0, NPcW=0, NPdcHW=0, NPdcHWB=0, NPeHD=0, NPeW=0, NPlH1=0, NPlH2=0, NPlHD=0, NPlW=0, NPqH=0, NPqHD=0, NPqW=0, NPuH=0, NPuW=0

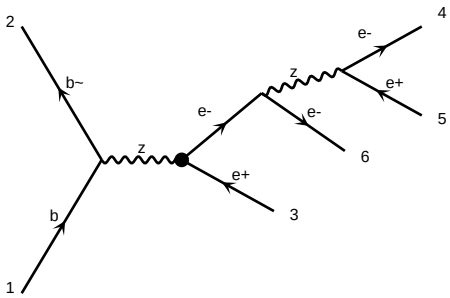

diagram 823 NP=1, NPcG=0, NPcGtil=0, NPcH=0, NPcHB=0, NPcHDD=0, NPcHW=0, NPcHWB=0, NPcW=0, NPdcHW=0, NPdcHWB=0, NPeHD=0, NPeW=0, NPlH1=0, NPlH2=0, NPlHD=0, NPlW=0, NPqH=0, NPqHD=0, NPqW=0, NPuH=0, NPuW=0

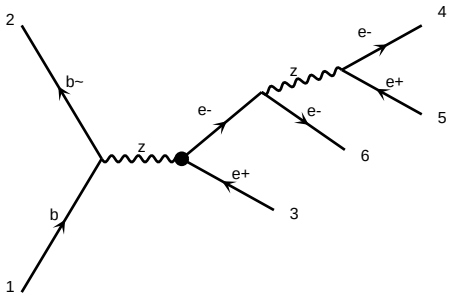

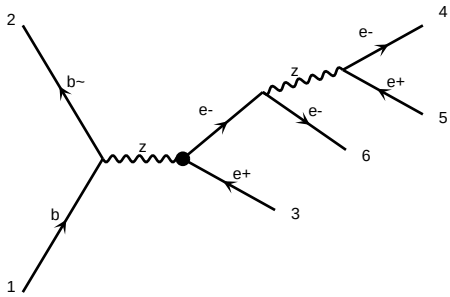

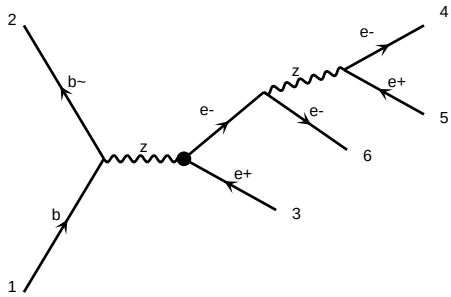

diagram 826 NP=1, NPcG=0, NPcGtil=0, NPcH=0, NPcHB=0, NPcHDD=0, NPcHW=0, NPcHWB=0, NPcW=0, NPlB=0, NPlH=0, NPlHD=0, NPlHe=0, NPlHl=0, NPlHq=0, NPlHu=0, NPlW=0, NPlWB=0, NPlWH=0, NPlWW=0, NPlWe=0, NPlWl=0, NPlWq=0, NPlWu=0, NPlqq1=0, NPlqq3=0, NPlqu1=0, NPlqu8=0, NPlu=0, NPlud1=0, NPlud8=0, NPqB=0, NPqH=0, NPqHD=0, NPqHe=0, NPqHl=0, NPqHq=0, NPqHu=0, NPqW=0, NPqWB=0, NPqWH=0, NPqWW=0, NPqWe=0, NPqWl=0, NPqWq=0, NPqWu=0, NPqqq1=0, NPqqq3=0, NPqqu1=0, NPqqu8=0, NPqu=0, NPqud1=0, NPqud8=0, NPuB=0, NPuH=0, NPuHD=0, NPuHe=0, NPuHl=0, NPuHq=0, NPuHu=0, NPuW=0, NPuWB=0, NPuWH=0, NPuWW=0, NPuWe=0, NPuWl=0, NPuWq=0, NPuWu=0, NPuqq1=0, NPuqq3=0, NPuqu1=0, NPuqu8=0, NPuu=0, NPuud1=0, NPuud8=0, QED=3, QNP=1, WEIGHTED=3

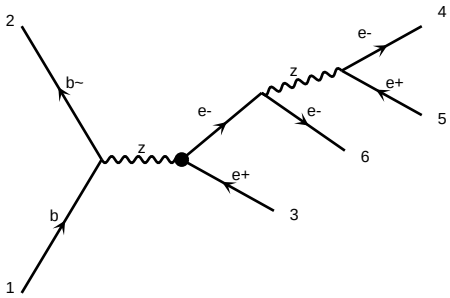

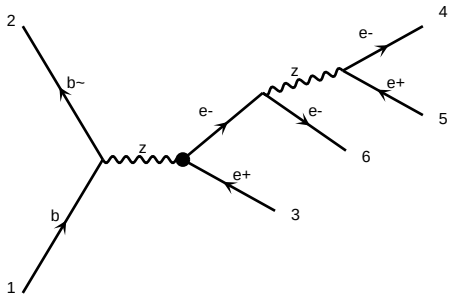

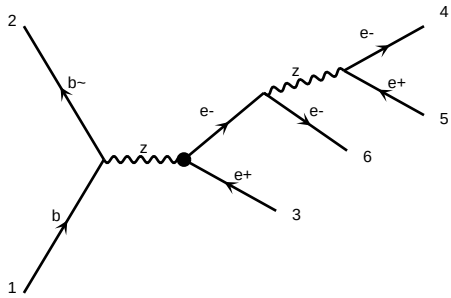

diagram 829 NP=1, NPcG=0, NPcGtil=0, NPcH=0, NPcHB=0, NPcHDD=0, NPcHW=0, NPcHWB=0, NPcW=0, NPlB=0, NPlH=0, NPlHD=0, NPlHe=0, NPlHl=0, NPlHq=0, NPlHu=0, NPlW=0, NPlWB=0, NPlWH=0, NPlWW=0, NPlWe=0, NPlWl=0, NPlWq=0, NPlWu=0, NPlqq1=0, NPlqq3=0, NPlqu1=0, NPlqu8=0, NPlu=0, NPlud1=0, NPlud8=0, NPqB=0, NPqH=0, NPqHD=0, NPqHe=0, NPqHl=0, NPqHq=0, NPqHu=0, NPqW=0, NPqWB=0, NPqWH=0, NPqWW=0, NPqWe=0, NPqWl=0, NPqWq=0, NPqWu=0, NPqqq1=0, NPqqq3=0, NPqqu1=0, NPqqu8=0, NPqu=0, NPqud1=0, NPqud8=0, NPuB=0, NPuH=0, NPuHD=0, NPuHe=0, NPuHl=0, NPuHq=0, NPuHu=0, NPuW=0, NPuWB=0, NPuWH=0, NPuWW=0, NPuWe=0, NPuWl=0, NPuWq=0, NPuWu=0, NPuqq1=0, NPuqq3=0, NPuqu1=0, NPuqu8=0, NPuu=0, NPuud1=0, NPuud8=0, QED=3, QNP=1, WEIGHTED=3

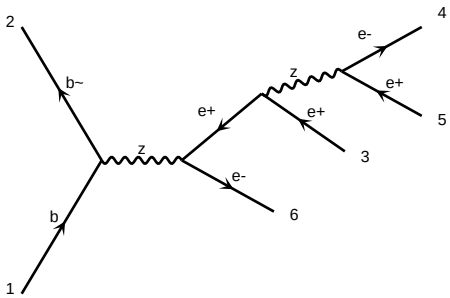

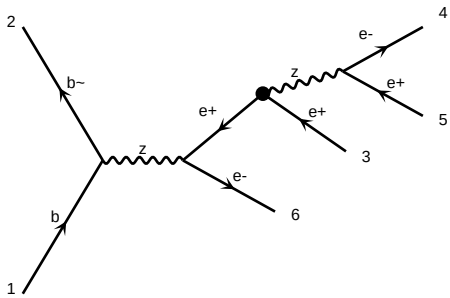

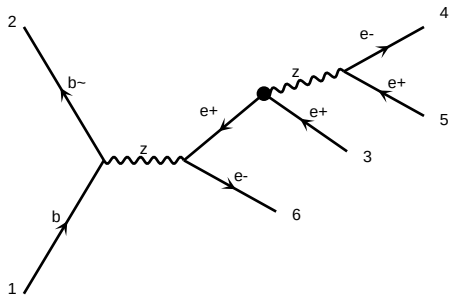

diagram 832 NP=0, NPcG=0, NPcGtil=0, NPcH=0, NPcHB=0, NPcHDD=0, NPcHW=0, NPcHWB=0, NPcW=0, NPlB=0, NPlH=0, NPlHD=0, NPlHe=0, NPlHl=0, NPlHq=0, NPlHu=0, NPlW=0, NPlWB=0, NPlWH=0, NPlWW=0, NPlWe=0, NPlWl=0, NPlWq=0, NPlWu=0, NPlqq1=0, NPlqq3=0, NPlqu1=0, NPlqu8=0, NPlu=0, NPlud1=0, NPlud8=0, NPqB=0, NPqH=0, NPqHD=0, NPqHe=0, NPqHl=0, NPqHq=0, NPqHu=0, NPqW=0, NPqWB=0, NPqWH=0, NPqWW=0, NPqWe=0, NPqWl=0, NPqWq=0, NPqWu=0, NPqqq1=0, NPqqq3=0, NPqqu1=0, NPqqu8=0, NPqu=0, NPqud1=0, NPqud8=0, NPuB=0, NPuH=0, NPuHD=0, NPuHe=0, NPuHl=0, NPuHq=0, NPuHu=0, NPuW=0, NPuWB=0, NPuWH=0, NPuWW=0, NPuWe=0, NPuWl=0, NPuWq=0, NPuWu=0, NPuqq1=0, NPuqq3=0, NPuqu1=0, NPuqu8=0, NPuu=0, NPuud1=0, NPuud8=0, QED=3, QNP=0, WEIGHTED=3

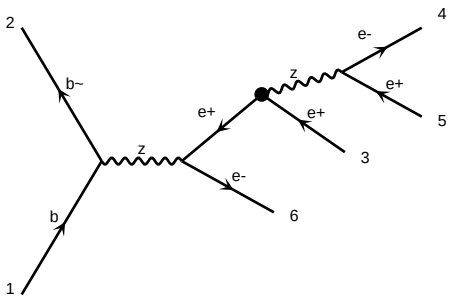

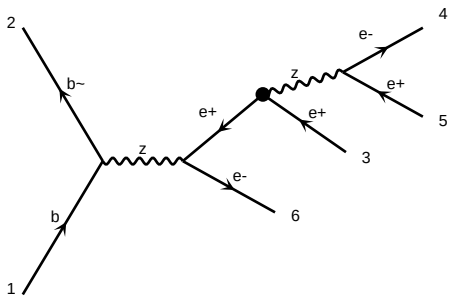

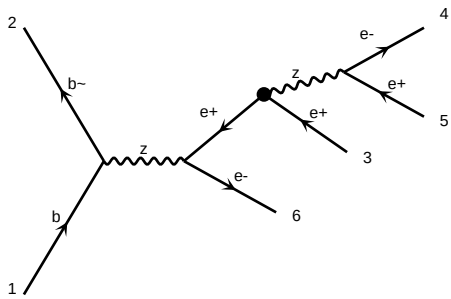

diagram 835 NP=1, NPcG=0, NPcGtil=0, NPcH=0, NPcHB=0, NPcHDD=0, NPcHW=0, NPcHWB=0, NPcW=0, NPlB=0, NPlH=0, NPlHD=0, NPlHe=0, NPlHl=0, NPlHq=0, NPlHu=0, NPlW=0, NPlWB=0, NPlWH=0, NPlWW=0, NPlWe=0, NPlWl=0, NPlWq=0, NPlWu=0, NPlqq1=0, NPlqq3=0, NPlqu1=0, NPlqu8=0, NPlu=0, NPlud1=0, NPlud8=0, NPqB=0, NPqH=0, NPqHD=0, NPqHe=0, NPqHl=0, NPqHq=0, NPqHu=0, NPqW=0, NPqWB=0, NPqWH=0, NPqWW=0, NPqWe=0, NPqWl=0, NPqWq=0, NPqWu=0, NPqqq1=0, NPqqq3=0, NPqqu1=0, NPqqu8=0, NPqu=0, NPqud1=0, NPqud8=0, NPuB=0, NPuH=0, NPuHD=0, NPuHe=0, NPuHl=0, NPuHq=0, NPuHu=0, NPuW=0, NPuWB=0, NPuWH=0, NPuWW=0, NPuWe=0, NPuWl=0, NPuWq=0, NPuWu=0, NPuqq1=0, NPuqq3=0, NPuqu1=0, NPuqu8=0, NPuu=0, NPuud1=0, NPuud8=0, QED=3, QNP=1, WEIGHTED=3

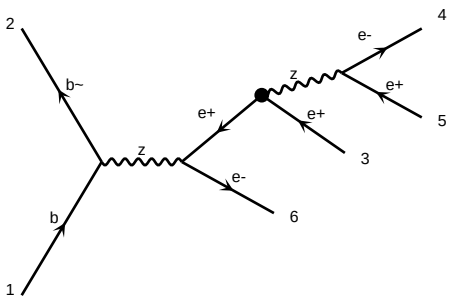

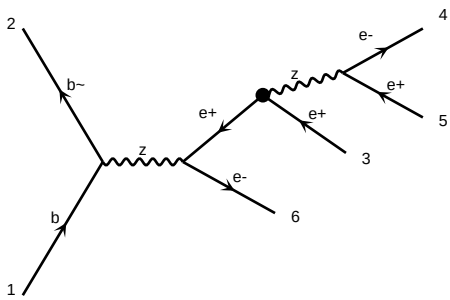

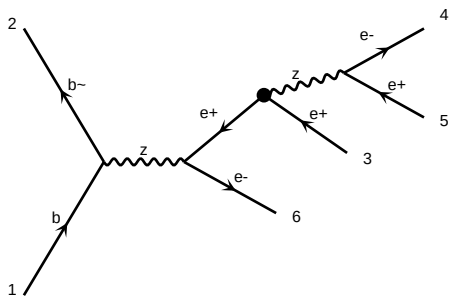

diagram 838 NP=1, NPcG=0, NPcGtil=0, NPcH=0, NPcHB=0, NPcHDD=0, NPcHW=0, NPcHWB=0, NPcW=0, NPlB=0, NPlH=0, NPlHD=0, NPlHe=0, NPlHl=0, NPlHq=0, NPlHu=0, NPlW=0, NPlWB=0, NPlWH=0, NPlWW=0, NPlWe=0, NPlWl=0, NPlWq=0, NPlWu=0, NPlqq1=0, NPlqq3=0, NPlqu1=0, NPlqu8=0, NPlu=0, NPlud1=0, NPlud8=0, NPqB=0, NPqH=0, NPqHD=0, NPqHe=0, NPqHl=0, NPqHq=0, NPqHu=0, NPqW=0, NPqWB=0, NPqWH=0, NPqWW=0, NPqWe=0, NPqWl=0, NPqWq=0, NPqWu=0, NPqqq1=0, NPqqq3=0, NPqqu1=0, NPqqu8=0, NPqu=0, NPqud1=0, NPqud8=0, NPuB=0, NPuH=0, NPuHD=0, NPuHe=0, NPuHl=0, NPuHq=0, NPuHu=0, NPuW=0, NPuWB=0, NPuWH=0, NPuWW=0, NPuWe=0, NPuWl=0, NPuWq=0, NPuWu=0, NPuqq1=0, NPuqq3=0, NPuqu1=0, NPuqu8=0, NPuu=0, NPuud1=0, NPuud8=0, QED=3, QNP=1, WEIGHTED=3

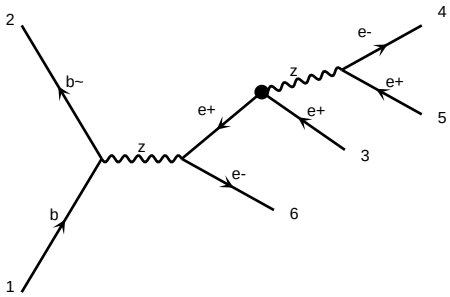

diagram 841 NP=1, NPcG=0, NPcGtil=0, NPcH=0, NPcHB=0, NPcHDD=0, NPcHW=0, NPcHWB=0, NPcW=0, NPdcHB=0, NPdcHW=0, NPeHB=0, NPeHW=0, NPlH1=0, NPlH2=0, NPlHB=0, NPlHW=0, NPlebH=0, NPlebHB=0, NPlebHW=0, NPlebW=0, NPlequ1H=0, NPlequ3H=0, NPlequ1HB=0, NPlequ3HB=0, NPlequ1HW=0, NPlequ3HW=0, NPlequ1W=0, NPlequ3W=0, NPqeH=0, NPqeHB=0, NPqeHW=0, NPqeW=0, NPquH=0, NPquHB=0, NPquHW=0, NPquW=0, NPqdH=0, NPqdHB=0, NPqdHW=0, NPqdW=0, NPquqdH=0, NPquqdHB=0, NPquqdHW=0, NPquqdW=0, NPlq1=0, NPlq3=0, NPlqHB=0, NPlqHW=0, NPlqW=0, NPld=0, NPlu=0, NPlHB=0, NPlHW=0, NPlW=0, NPeH=0, NPeHB=0, NPeHW=0, NPeW=0, NPqq1=0, NPqq3=0, NPqqHB=0, NPqqHW=0, NPqqW=0, NPqu1=0, NPqu3=0, NPquHB=0, NPquHW=0, NPquW=0, NPqd=0, NPqdHB=0, NPqdHW=0, NPqdW=0, NPud=0, NPudHB=0, NPudHW=0, NPud

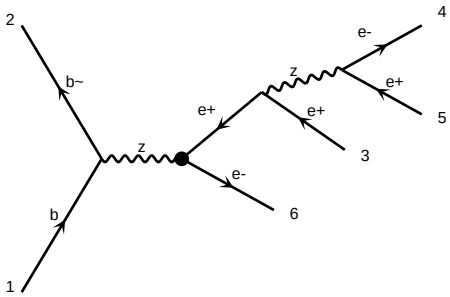

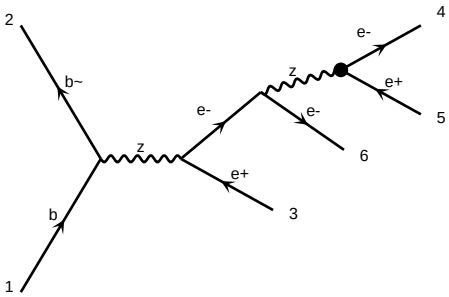

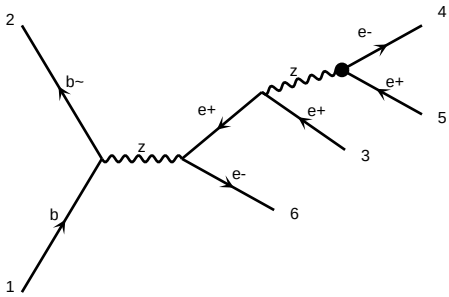

diagram 856 NP=1, NPcG=0, NPcGtil=0, NPcH=0, NPcHB=0, NPcHDD=0, NPcHW=0, NPcHWB=0, NPcW=0, NPeHB=0, NPeW=0, NPlH1=0, NPlH3=0, NPlHB=0, NPlHW=0, NPlL1=0, NPlL3=0, NPlQ1=0, NPlQ3=0, NPlebQ=0, NPleH=0, NPleW=0, NPqH=0, NPqW=0, NPuH=0, NPuW=0

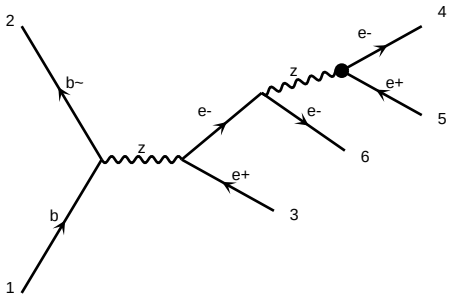

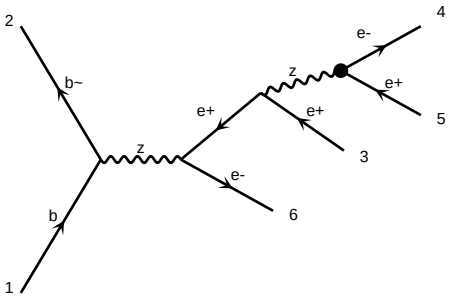

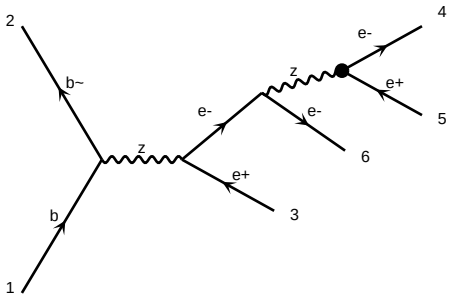

diagram 859 NP=1, NPcG=0, NPcGtil=0, NPcH=0, NPcHB=0, NPcHDD=0, NPcHW=0, NPcHWB=0, NPcW=0, NPeHB=0, NPeW=0, NPlH1=0, NPlH3=0, NPlHB=0, NPlHW=0, NPlL1=0, NPlL3=0, NPlQ1=0, NPlQ3=0, NPlebQ=0, NPleH=0, NPleW=0, NPqH=0, NPqW=0, NPuH=0, NPuW=0

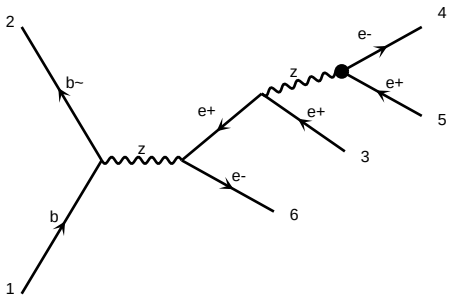

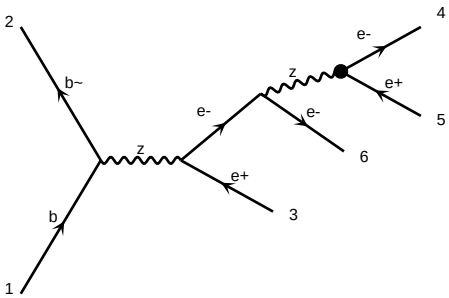

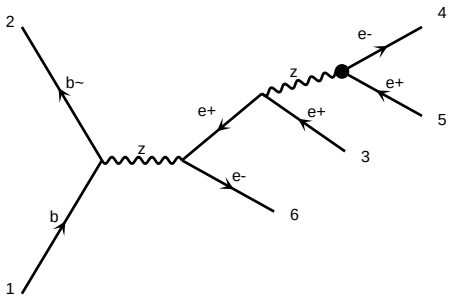

diagram 862 NP=1, NPcG=0, NPcGtil=0, NPcH=0, NPcHB=0, NPcHDD=0, NPcHW=0, NPcHWB=0, NPcW=0, NPeHB=0, NPeW=0, NPlH1=0, NPlH3=0, NPlHB=0, NPlHW=0, NPlL1=0, NPlL3=0, NPlQ1=0, NPlQ3=0, NPlebQ=0, NPleH=0, NPleW=0, NPqH=0, NPqW=0, NPuH=0, NPuW=0

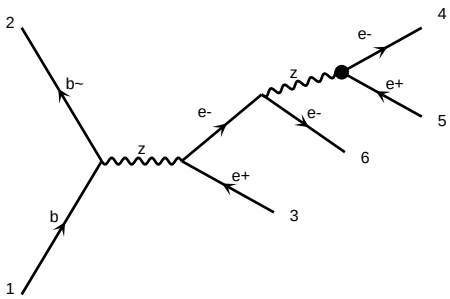

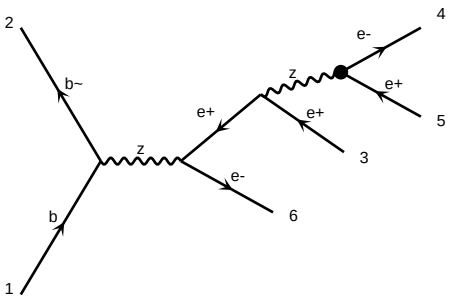

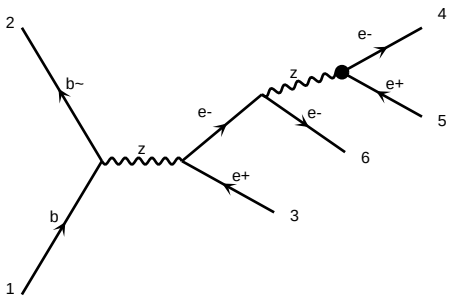

diagram 865 NP=1, NPcG=0, NPcGtil=0, NPcH=0, NPcHB=0, NPcHDD=0, NPcHW=0, NPcHWB=0, NPcW=0, NPeHB=0, NPeW=0, NPlH1=0, NPlH3=0, NPlHB=0, NPlHW=0, NPlL1=0, NPlL3=0, NPlQ1=0, NPlQ3=0, NPlebQ=0, NPleH=0, NPleW=0, NPqH=0, NPqW=0, NPuH=0, NPuW=0

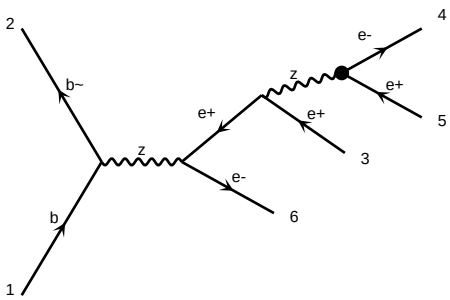

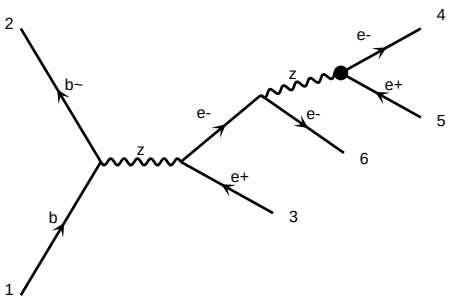

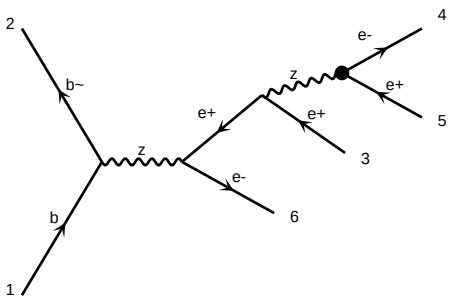

diagram 868 NP=1, NPcG=0, NPcGtil=0, NPcH=0, NPcHB=0, NPcHDD=0, NPcHW=0, NPcHWB=0, NPcW=0, NPeHB=0, NPeW=0, NPlH1=0, NPlH3=0, NPlHB=0, NPlHW=0, NPlL1=0, NPlL3=0, NPlQ1=0, NPlQ3=0, NPlebQ=0, NPleH=0, NPleW=0, NPqH=0, NPqW=0, NPuH=0, NPuW=0

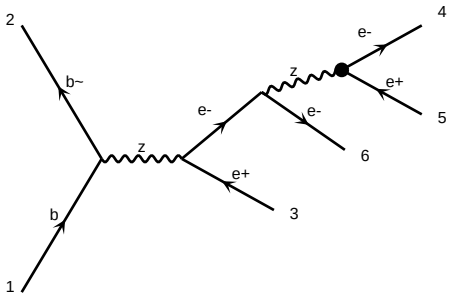

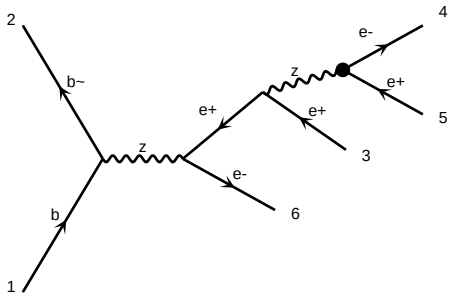

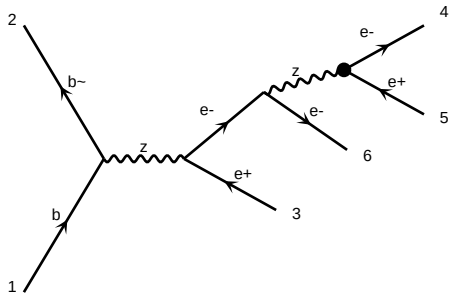

diagram 871 NP=1, NPcG=0, NPcGtil=0, NPcH=0, NPcHB=0, NPcHDD=0, NPcHW=0, NPcHWB=0, NPcW=0, NPeHB=0, NPeW=0, NPlH1=0, NPlH3=0, NPlHB=0, NPlHW=0, NPlL1=0, NPlL3=0, NPlQ1=0, NPlQ3=0, NPlebQ=0, NPleH=0, NPleW=0, NPqH=0, NPqHB=0, NPqHW=0, NPqW=0, NPuG=0, NPuH=0, NPuW=0

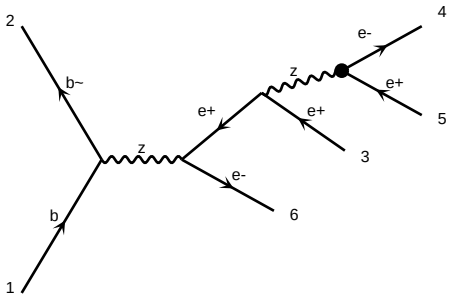

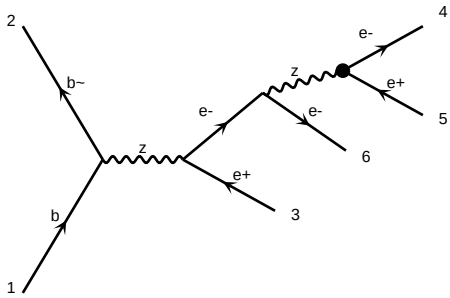

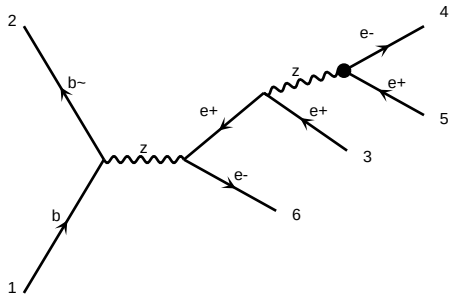

diagram 874 NP=1, NPcG=0, NPcGtil=0, NPcH=0, NPcHB=0, NPcHDD=0, NPcHW=0, NPcHWB=0, NPcW=0, NPeHB=0, NPeW=0, NPlH1=0, NPlH3=0, NPlHB=0, NPlHW=0, NPlL1=0, NPlL3=0, NPlQ1=0, NPlQ3=0, NPlebQ=0, NPleH=0, NPleW=0, NPqH=0, NPqHB=0, NPqHW=0, NPqW=0, NPuG=0, NPuH=0, NPuW=0

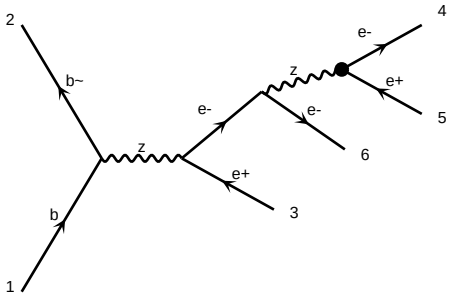

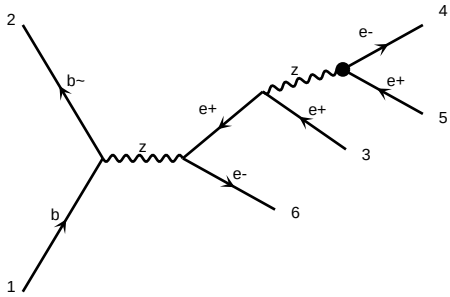

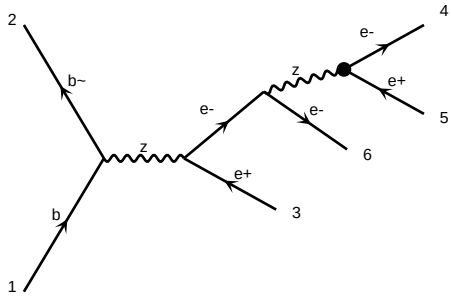

diagram 877 NP=1, NPcG=0, NPcGtil=0, NPcH=0, NPcHB=0, NPcHDD=0, NPcHW=0, NPcHWB=0, NPcW=0, NPeHB=0, NPeW=0, NPlH1=0, NPlH3=0, NPlHB=0, NPlHW=0, NPlL1=0, NPlL3=0, NPlQ1=0, NPlQ3=0, NPlebQ=0, NPleH=0, NPleW=0, NPqH=0, NPqHB=0, NPqHW=0, NPqW=0, NPuG=0, NPuH=0, NPuW=0

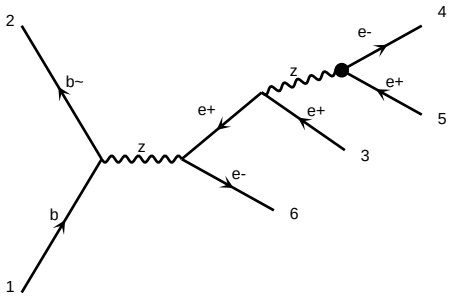

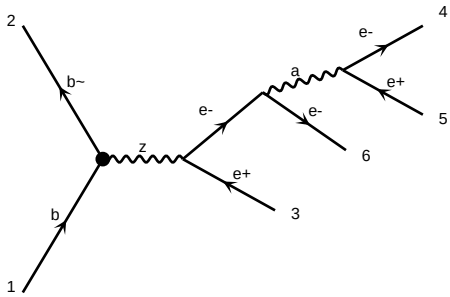

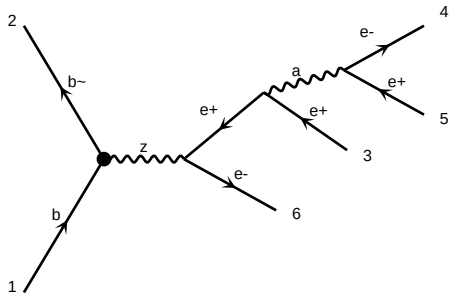

diagram 880 NP=1, NPcG=0, NPcGtil=0, NPcH=0, NPcHB=0, NPcHDD=0, NPcHW=0, NPcHWB=0, NPcW=0, NPeHB=0, NPeW=0, NPlH1=0, NPlH3=0, NPlHB=0, NPlHW=0, NPlL1=0, NPlL3=0, NPlQ1=0, NPlQ3=0, NPlebQ=0, NPleH=0, NPleW=0, NPqH=0, NPqHB=0, NPqHW=0, NPqW=0, NPuG=0, NPuH=0, NPuW=0

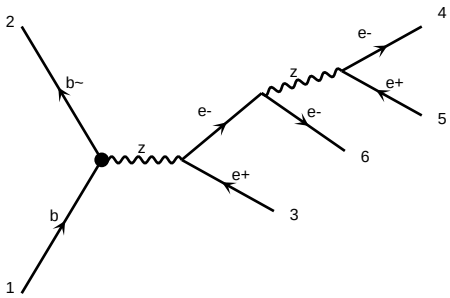

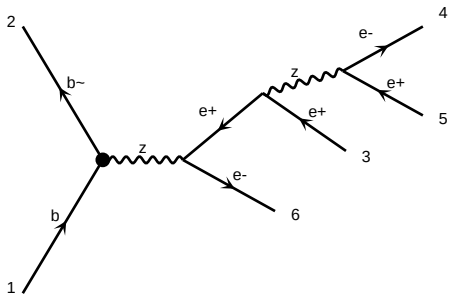

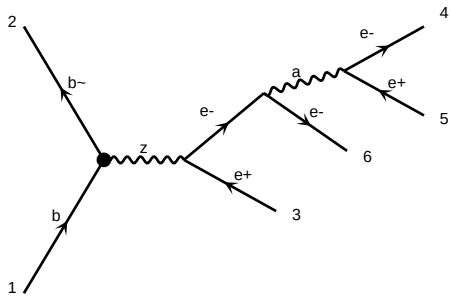

diagram 883 NP=1, NPcG=0, NPcGtil=0, NPcH=0, NPcHB=0, NPcHDD=0, NPcHW=0, NPcHWB=0, NPcW=0, NPeHB=0, NPeW=0, NPlH1=0, NPlH3=0, NPlHB=0, NPlHW=0, NPlL1=0, NPlL3=0, NPlQ1=0, NPlQ3=0, NPlebQ=0, NPleH=0, NPleW=0, NPqH=0, NPqHB=0, NPqHW=0, NPqW=0, NPuG=0, NPuH=0, NPuW=0

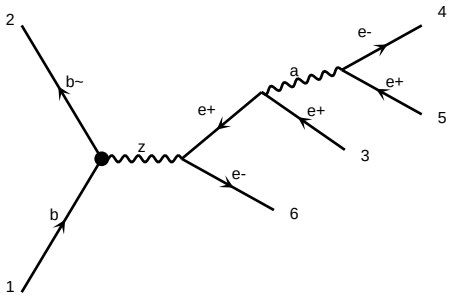

diagram 886 NP=1, NPcG=0, NPcGtil=0, NPcH=0, NPcHB=0, NPcHDD=0, NPcHW=0, NPcHWB=0, NPcW=0, NPcWtil=0, NPdB=0, NPdBtil=0, NPdG=0, NPdGtil=0, NPdW=0, NPdWtil=0, NPeB=0, NPeH=0, NPeW=0, NPlH1=0, NPlH2=0, NPlHDC=0, NPlL1=0, NPlL2=0, NPlQ1=0, NPlQ3=0, NPlebQ=0, NPleeQH=0, NPleuH=0, NPlfB=0, NPlfH=0, NPlfW=0, NPlnlB=0, NPlnlH=0, NPlnlW=0, NPqB=0, NPqBtil=0, NPqG=0, NPqGtil=0, NPqH=0, NPqHDC=0, NPqHW=0, NPqHWB=0, NPqW=0, NPqWtil=0, NPquH=0, NPqqB=0, NPqqBtil=0, NPqqG=0, NPqqGtil=0, NPqqH=0, NPqqW=0, NPqqWtil=0, NPquB=0, NPquBtil=0, NPquG=0, NPquGtil=0, NPquW=0, NPquWtil=0, NPqdB=0, NPqdBtil=0, NPqdG=0, NPqdGtil=0, NPqdW=0, NPqdWtil=0, NPqlB=0, NPqlBtil=0, NPqlG=0, NPqlGtil=0, NPqlW=0, NPqlWtil=0, NPtB=0, NPtBtil=0, NPtG=0, NPtGtil=0, NPtH=0, NPtW=0, NPtWtil=0, NPtlB=0, NPtlBtil=0, NPtlG=0, NPtlGtil=0, NPtlW=0, NPtlWtil=0, NPtqB=0, NPtqBtil=0, NPtqG=0, NPtqGtil=0, NPtqH=0, NPtqW=0, NPtqWtil=0, NPttB=0, NPttBtil=0, NPttG=0, NPttGtil=0, NPttH=0, NPttW=0, NPttWtil=0, NPtuB=0, NPtuBtil=0, NPtuG=0, NPtuGtil=0, NPtuW=0, NPtuWtil=0, NPtdB=0, NPtdBtil=0, NPtdG=0, NPtdGtil=0, NPtdW=0, NPtd

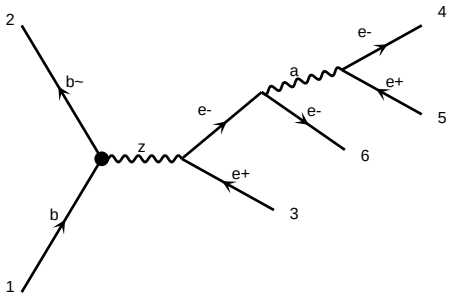

diagram 901 NP=1, NPcG=0, NPcGtil=0, NPcH=0, NPcHB=0, NPcHDD=0, NPcHW=0, NPcHWB=0, NPcW=0, NPdcHB=0, NPdcHW=0, NPeHB=0, NPeHW=0, NPlH1=0, NPlH2=0, NPlHB=0, NPlHW=0, NPlebH=0, NPlebHB=0, NPlebHW=0, NPlebWB=0, NPlebW=0, NPqHB=0, NPqHW=0, NPquHB=0, NPquHW=0, NPquW=0, NPuHB=0, NPuHW=0, NPuW=0

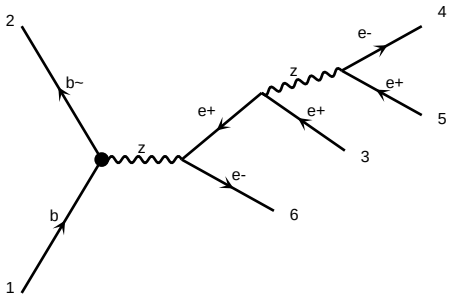

diagram 904 NP=1, NPcG=0, NPcGtil=0, NPcH=0, NPcHB=0, NPcHDD=0, NPcHW=0, NPcHWB=0, NPcW=0, NPdcHB=0, NPdcHW=0, NPeHB=0, NPeHW=0, NPlH1=0, NPlH2=0, NPlHB=0, NPlHW=0, NPlebH=0, NPlebHB=0, NPlebHW=0, NPlebWB=0, NPlebW=0, NPqHB=0, NPqHW=0, NPquHB=0, NPquHW=0, NPquW=0, NPuHB=0, NPuHW=0, NPuW=0

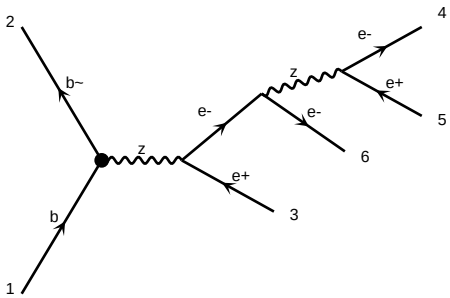

diagram 907 NP=1, NPcG=0, NPcGtil=0, NPcH=0, NPcHB=0, NPcHDD=0, NPcHW=0, NPcHWB=0, NPcW=0, NPdcHB=0, NPdcHW=0, NPeHB=0, NPeHW=0, NPlH1=0, NPlH2=0, NPlHB=0, NPlHW=0, NPlebH=0, NPlebHB=0, NPlebHW=0, NPlebWB=0, NPlebW=0, NPqHB=0, NPqHW=0, NPquHB=0, NPquHW=0, NPquW=0, NPuHB=0, NPuHW=0, NPuW=0

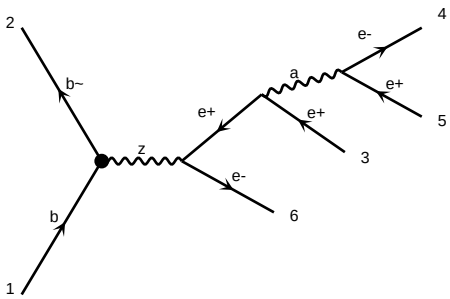

diagram 910 NP=1, NPcG=0, NPcGtil=0, NPcH=0, NPcHB=0, NPcHDD=0, NPcHW=0, NPcHWB=0, NPcW=0, NPdcHB=0, NPdcHW=0, NPeHB=0, NPeHW=0, NPlH1=0, NPlH2=0, NPlHB=0, NPlHW=0, NPlebH=0, NPlebHB=0, NPlebHW=0, NPlebWB=0, NPlebW=0, NPqHB=0, NPqHW=0, NPquHB=0, NPquHW=0, NPquW=0, NPuHB=0, NPuHW=0, NPuW=0

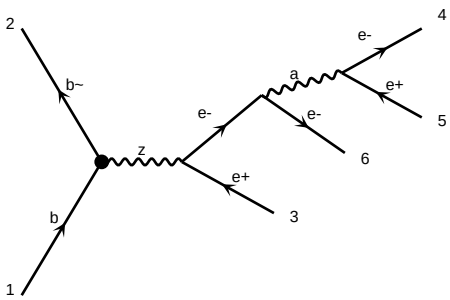

diagram 913 NP=1, NPcG=0, NPcGtil=0, NPcH=0, NPcHB=0, NPcHDD=0, NPcHW=0, NPcHWB=0, NPcW=0, NPdcHB=0, NPdcHW=0, NPeHB=0, NPeHW=0, NPlH1=0, NPlH2=0, NPlHB=0, NPlHW=0, NPlebH=0, NPlebHB=0, NPlebHW=0, NPlebWB=0, NPlebW=0, NPqHB=0, NPqHW=0, NPquHB=0, NPquHW=0, NPquW=0, NPuHB=0, NPuHW=0, NPuW=0

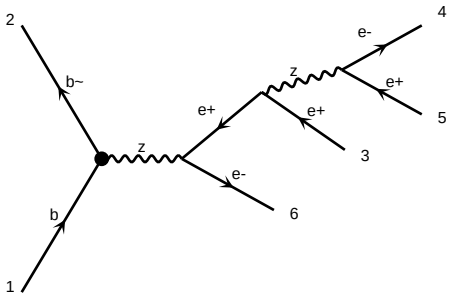

diagram 916 NP=1, NPcG=0, NPcGtil=0, NPcH=0, NPcHB=0, NPcHW=0, NPcHWB=0, NPcHbox=0, NPcHDD=0, NPcHl=0, NPcll=0, NPclq1=0, NPclq3=0, NPed=0, NPlu=0, NPqe=0, NPqu=0, NPquqd1=0, NPquqd8=0, NPlq1=0, NPlq3=0, NPledq=0, NPlequ1=0, NPlequ3=0, NPllet=0, NPqqq1=0, NPqqq3=0, NPlnuqd=0, NPllnuq=0, NPlnulq=0, NPqqqu=0, NPqqqd=0, NPuuet=0, NPquqd1=0, NPquqd8

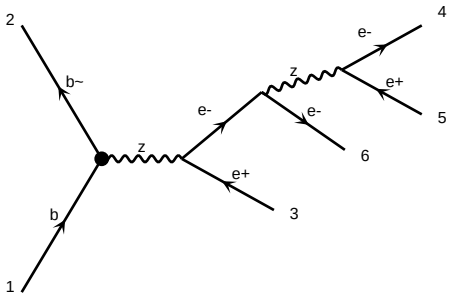

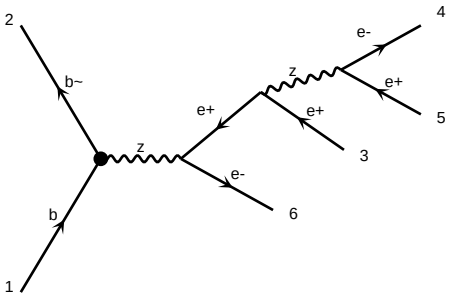

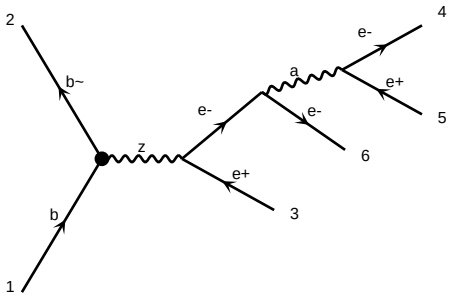

diagram 931 NP=1, NPcG=0, NPcGtil=0, NPcH=0, NPcHB=0, NPcHW=0, NPcHWB=0, NPcW=0, NPcWtil=0, NPll=0, NPlq1=0, NPlq3=0, NPqq1=0, NPqq3=0, NPqu1=0, NPqu8=0, NPtu1=0, NPtu8=0, NPud1=0, NPud8=0, NPHDD=0, NPHl1=0, NPHl3=0, NPHq1=0, NPHq3=0, NPHu=0, NPHd=0, NPHud=0, NPeH=0, NPuH=0, NPdH=0, NPeW=0, NPeB=0, NPuW=0, NPuB=0, NPdW=0, NPdB=0, NPlebQ=0, NPlequ1=0, NPlequ3=0, NPledq=0, NPquqd1=0, NPquqd8=0, NPlnuQ=0, NPlnudq=0, NPllet=0, NPqe=0, NPlu=0, NPld=0, NPqu=0, NPqd=0, NPee=0, NPeu=0, NPed=0, NPud=0, NPle=0, NPlu=0, NPld=0, NPqe

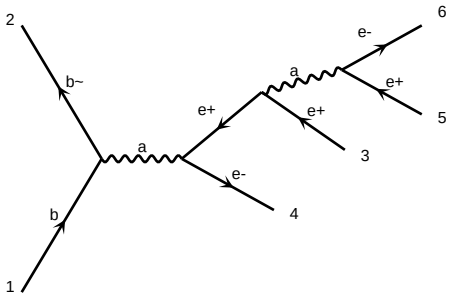

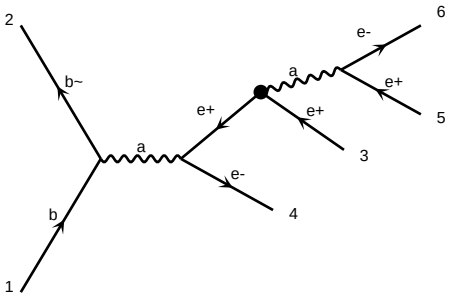

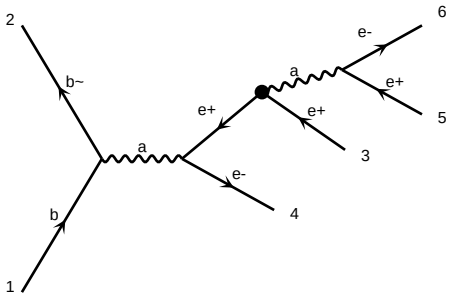

diagram 946 NP=0, NPcG=0, NPcGtil=0, NPcH=0, NPcHB=0, NPcHW=0, NPcHWB=0, NPcHDD=0, NPcHbox=0, NPcW=0, NPcll=0, NPcqq1=0, NPcqq3=0, NPcqq11=0, NPcqq31=0, NPclq1=0, NPclq3=0, NPcHl1=0, NPcHl3=0, NPcHq1=0, NPcHq3=0, NPcHu=0, NPcHd=0, NPcHud=0, NPcuW=0, NPcuH=0, NPcdW=0, NPcdH=0, NPclebQNu1100=0, NPcledqNe1100=0, NPcquqd11=0, NPcquqd81=0, NPclequ11=0, NPcquqd12=0, NPcquqd82=0, NPclequ12=0, NPcquqd13=0, NPcquqd83=0, NPclequ13=0, NPcquqd21=0, NPcquqd91=0, NPclequ21=0, NPcquqd22=0, NPcquqd92=0, NPclequ22=0, NPcquqd23=0, NPcquqd93=0, NPclequ23=0, NPcquqd31=0, NPcquqd101=0, NPclequ31=0, NPcquqd32=0, NPcquqd102=0, NPclequ32=0, NPcquqd33=0, NPcquqd103=0, NPclequ33=0, NPcleQNu1100=0, NPcleQNe1100=0, NPclebQNe1100=0, NPcHbox=0, NPcHDD=0, NPcHW=0, NPcHB=0, NPcHWB=0, NPcuG=0, NPcdG=0, NPcuB=0, NPcdB=0, NPcuW=0, NPcdW=0, NPcHl1=0, NPcHl3=0, NPcHq1=0, NPcHq3=0, NPcHu=0, NPcHd=0, NPcHud=0, NPcll=0, NPcqq1=0, NPcqq3=0, NPcqq11=0, NPcqq31=0, NPclq1=0, NPclq3=0, NPcuH=0, NPcdH=0, NPcuW=0, NPcdW

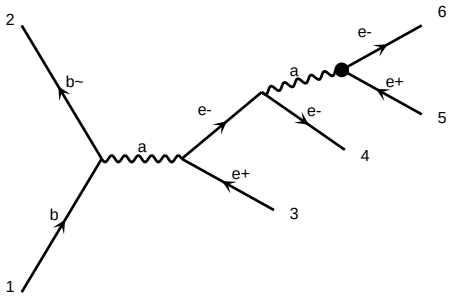

diagram 961 NP=1, NPcG=0, NPcGtil=0, NPcH=0, NPcHB=0, NPcHDD=0, NPcHW=0, NPcHWB=0, NPcW=0, NPdcHW=0, NPdcHWB=0, NPeHDD=0, NPeHWB=0, NPeW=0, NPlHDD=0, NPlHWB=0, NPlW=0, NPqHDD=0, NPqHWB=0, NPqW=0, NPuHDD=0, NPuHWB=0, NPuW=0

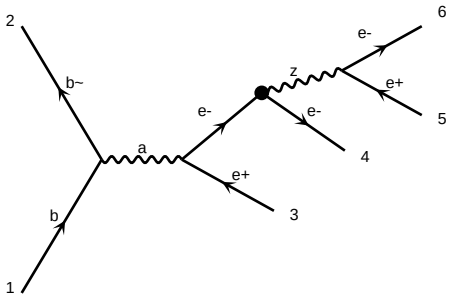

diagram 964 NP=1, NPcG=0, NPcGtil=0, NPcH=0, NPcHB=0, NPcHDD=0, NPcHW=0, NPcHWB=0, NPcW=0, NPdcHW=0, NPdcHWB=0, NPeHDD=0, NPeHWB=0, NPeW=0, NPlHDD=0, NPlHWB=0, NPlW=0, NPqHDD=0, NPqHWB=0, NPqW=0, NPuHDD=0, NPuHWB=0, NPuW=0

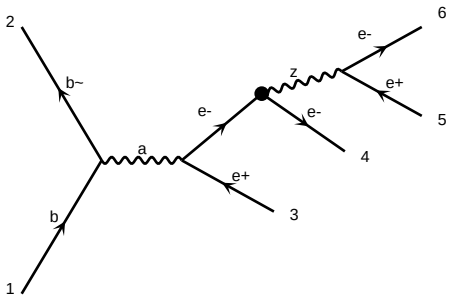

diagram 967 NP=1, NPcG=0, NPcGtil=0, NPcH=0, NPcHB=0, NPcHDD=0, NPcHW=0, NPcHWB=0, NPcW=0, NPdcHW=0, NPdcHWB=0, NPeHDD=0, NPeHWB=0, NPeW=0, NPlHDD=0, NPlHWB=0, NPlW=0, NPqHDD=0, NPqHWB=0, NPqW=0, NPuHDD=0, NPuHWB=0, NPuW=0

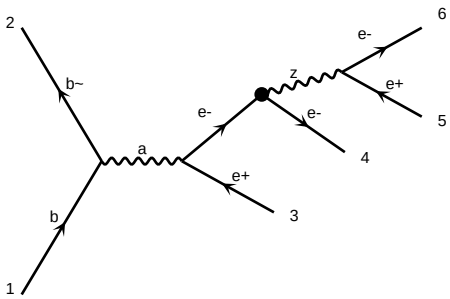

diagram 970 NP=1, NPcG=0, NPcGtil=0, NPcH=0, NPcHB=0, NPcHDD=0, NPcHW=0, NPcHWB=0, NPcW=0, NPdcHW=0, NPdcHWB=0, NPeHDD=0, NPeHWB=0, NPeW=0, NPlHDD=0, NPlHWB=0, NPlW=0, NPqHDD=0, NPqHWB=0, NPqW=0, NPuHDD=0, NPuHWB=0, NPuW=0

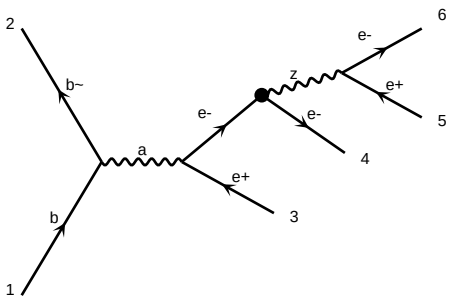

diagram 973 NP=1, NPcG=0, NPcGtil=0, NPcH=0, NPcHB=0, NPcHDD=0, NPcHW=0, NPcHWB=0, NPcW=0, NPdcHW=0, NPdcHWB=0, NPeHDD=0, NPeHWB=0, NPeW=0, NPlHDD=0, NPlHWB=0, NPlW=0, NPqHDD=0, NPqHWB=0, NPqW=0, NPuHDD=0, NPuHWB=0, NPuW=0

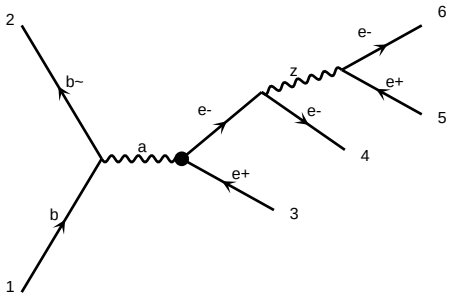

diagram 976 NP=1, NPcG=0, NPcGtil=0, NPcH=0, NPcHB=0, NPcHW=0, NPcHWB=0, NPcW=0, NPcWtil=0, NPHDD=0, NPll=0, NPlq1=0, NPlq3=0, NPqq1=0, NPqq3=0, NPqu1=0, NPqu8=0, NPuu=0

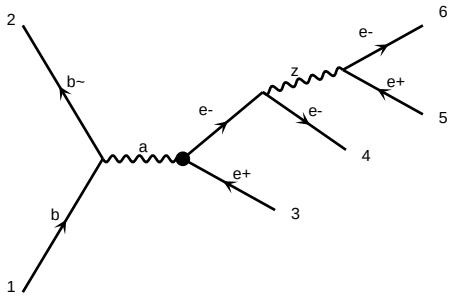

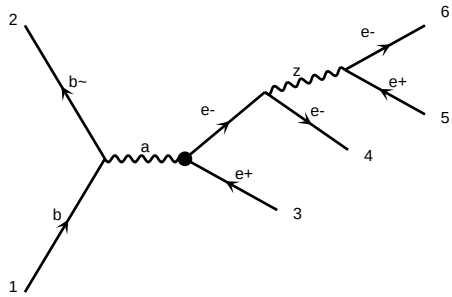

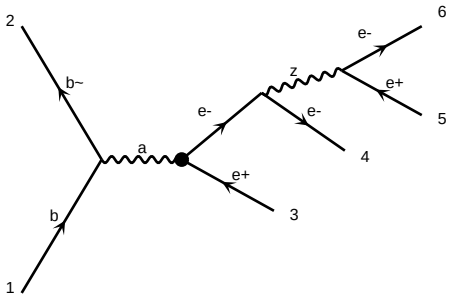

diagram 979 NP=1, NPcG=0, NPcGtil=0, NPcH=0, NPcHB=0, NPcHW=0, NPcHWB=0, NPcW=0, NPcWtil=0, NPHDD=0, NPll=0, NPlq1=0, NPlq3=0, NPqq1=0, NPqq3=0, NPqu1=0, NPqu8=0, NPuu=0

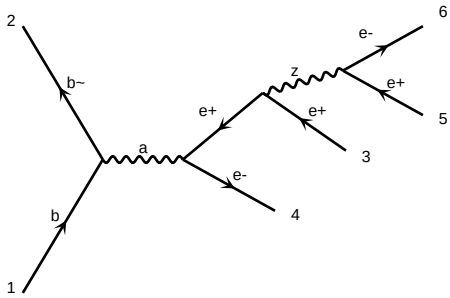

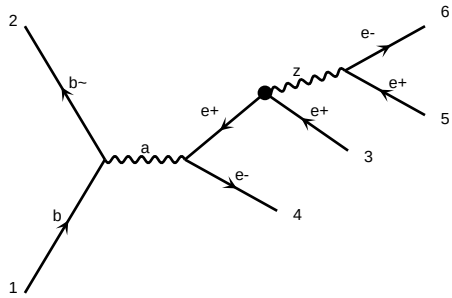

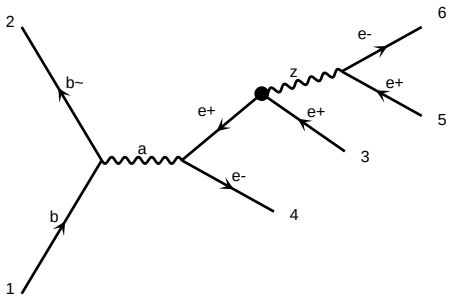

diagram 982 NP=1, NPcG=0, NPcGtil=0, NPcH=0, NPcHB=0, NPcHW=0, NPcHWB=0, NPcW=0, NPcWtil=0, NPHDD=0, NPll=0, NPlq1=0, NPlq3=0, NPqq1=0, NPqq3=0, NPqu1=0, NPqu8=0, NPuu=0

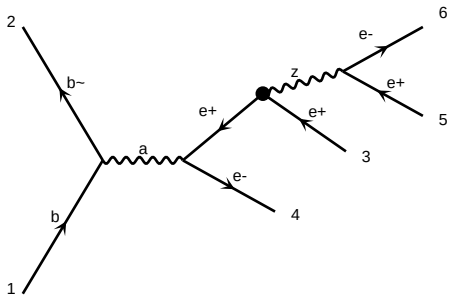

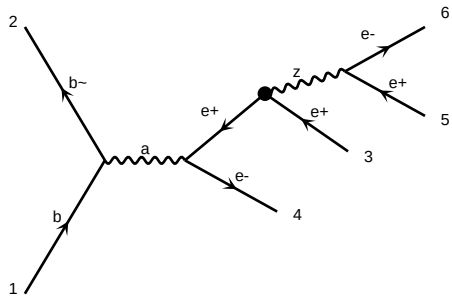

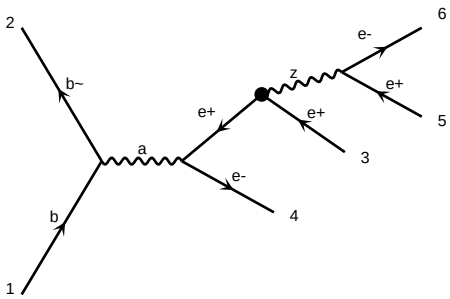

diagram 985 NP=1, NPcG=0, NPcGtil=0, NPcH=0, NPcHB=0, NPcHW=0, NPcHWB=0, NPcW=0, NPcWtil=0, NPHDD=0, NPll=0, NPlq1=0, NPlq3=0, NPqq1=0, NPqq3=0, NPqu1=0, NPqu8=0, NPuu=0

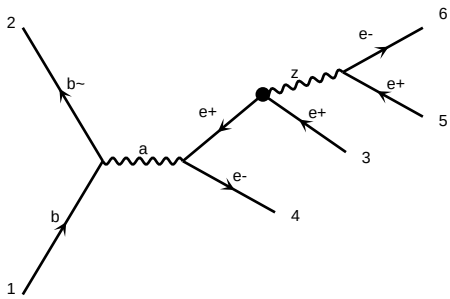

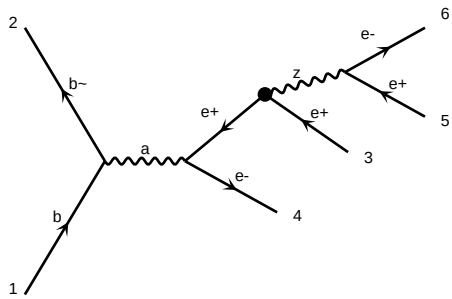

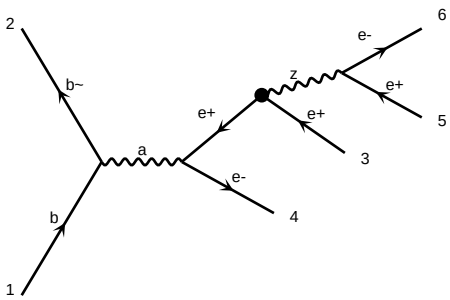

diagram 988 NP=1, NPcG=0, NPcGtil=0, NPcH=0, NPcHB=0, NPcHW=0, NPcHWB=0, NPcW=0, NPcWtil=0, NPHDD=0, NPll=0, NPlq1=0, NPlq3=0, NPqq1=0, NPqq3=0, NPqu1=0, NPqu8=0, NPuu=0

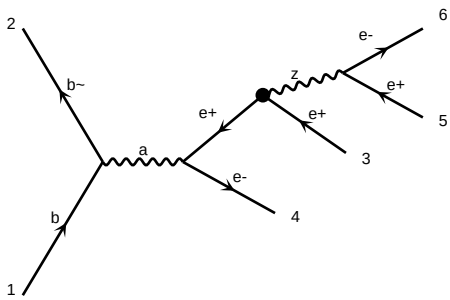

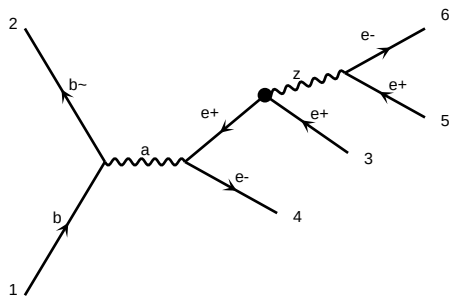

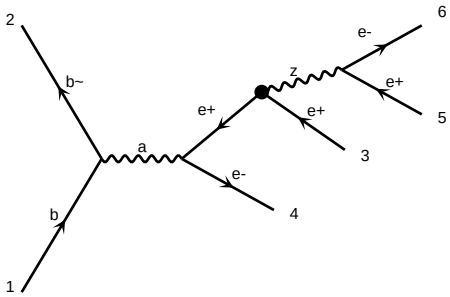

diagram 991 NP=1, NPcG=0, NPcGtil=0, NPcH=0, NPcHB=0, NPcHBtil=0, NPcHDD=0, NPcHW=0, NPcHWB=0, NPcHWtil=0, NPcHWtilB=0, NPcHbox=0, NPcHl1=0, NPcHl3=0, NPcHq1=0, NPcHq3=0, NPcHu=0, NPcHud=0, NPcW=0, NPcWtil=0, NPcbW=0, NPcdB=0, NPcdW=0, NPceB=0, NPceH=0, NPceW=0, NPcuB=0, NPcuG=0, NPcuH=0, NPcuW=0, NPlq1=0, NPlq3=0, NPqe=0, NPqu1=0, NPqu8=0, NPquqd1=0, NPquqd8=0

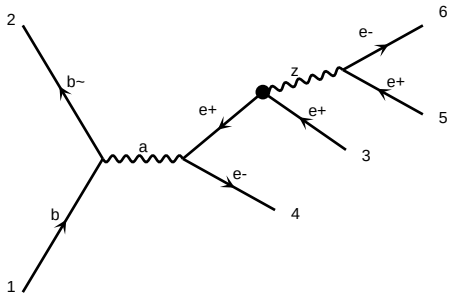

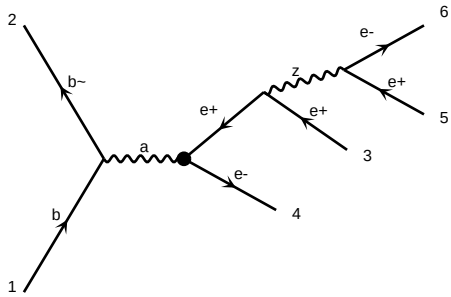

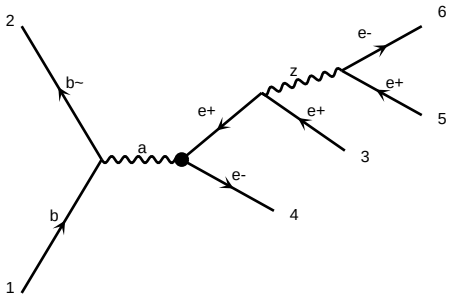

diagram 994 NP=1, NPcG=0, NPcGtil=0, NPcH=0, NPcHB=0, NPcHBtil=0, NPcHDD=0, NPcHW=0, NPcHWB=0, NPcHWtil=0, NPcHWtilB=0, NPcHbox=0, NPcHl1=0, NPcHl3=0, NPcHq1=0, NPcHq3=0, NPcHu=0, NPcHud=0, NPcW=0, NPcWtil=0, NPcbW=0, NPcdB=0, NPcdW=0, NPceB=0, NPceH=0, NPceW=0, NPcuB=0, NPcuG=0, NPcuH=0, NPcuW=0, NPlq1=0, NPlq3=0, NPqe=0, NPqu1=0, NPqu8=0, NPquqd1=0, NPquqd8=0

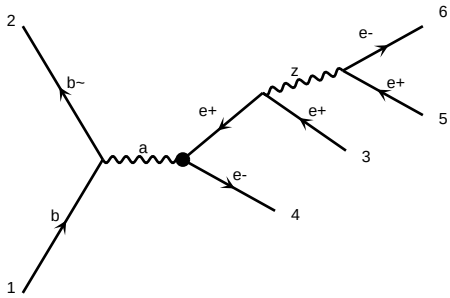

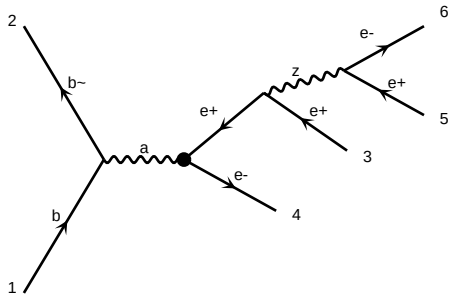

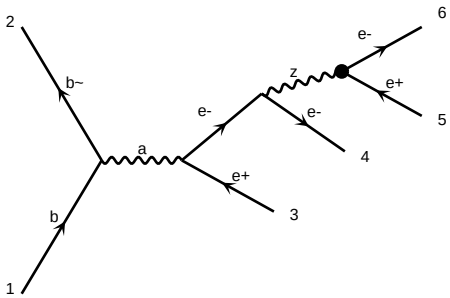

diagram 997 NP=1, NPcG=0, NPcGtil=0, NPcH=0, NPcHB=0, NPcHBtil=0, NPcHDD=0, NPcHW=0, NPcHWB=0, NPcHWtil=0, NPcHWtilB=0, NPcHbox=0, NPcHl1=0, NPcHl3=0, NPcHq1=0, NPcHq3=0, NPcHu=0, NPcHud=0, NPcW=0, NPcWtil=0, NPcbW=0, NPcdB=0, NPcdW=0, NPceB=0, NPceH=0, NPceW=0, NPcuB=0, NPcuG=0, NPcuH=0, NPcuW=0, NPlq1=0, NPlq3=0, NPqe=0, NPqu1=0, NPqu8=0, NPquqd1=0, NPquqd8=0

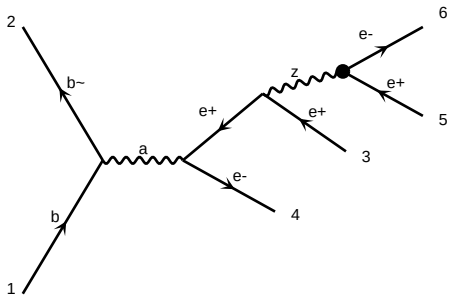

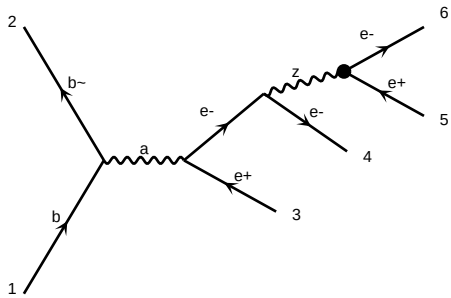

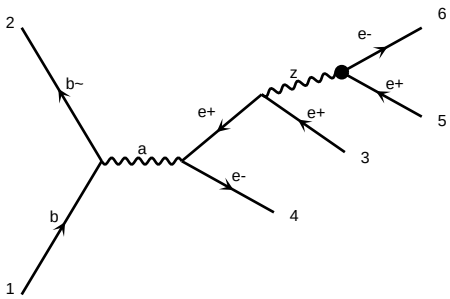

diagram 1000 NP=1, NPcG=0, NPcGtil=0, NPcH=0, NPcHB=0, NPcHBtil=0, NPcHDD=0, NPcHW=0, NPcHWB=0, NPcHWtil=0, NPcHWtilB=0, NPcHbox=0, NPcHl1=0, NPcHl3=0, NPcHq1=0, NPcHq3=0, NPcHu=0, NPcHud=0, NPcW=0, NPcWtil=0, NPcbW=0, NPcdB=0, NPcdW=0, NPceB=0, NPceH=0, NPceW=0, NPcuB=0, NPcuG=0, NPcuH=0, NPcuW=0, NPlq1=0, NPlq3=0, NPqe=0, NPqu1=0, NPqu8=0, NPquqd1=0, NPquqd8=0

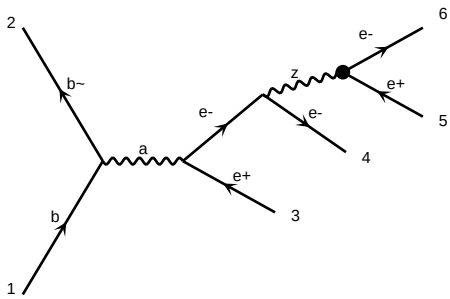

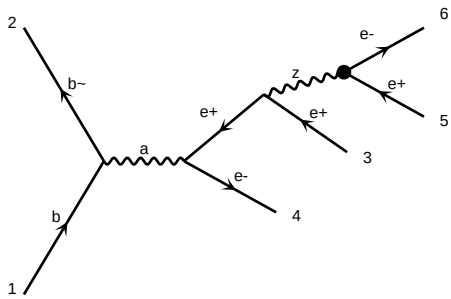

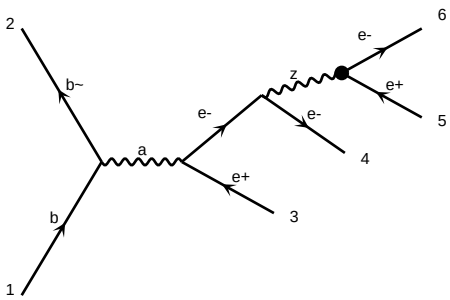

diagram 1003 NP=1, NPcG=0, NPcGtil=0, NPcH=0, NPcHB=0, NPcHBtil=0, NPcHDD=0, NPcHW=0, NPcHWB=0, NPcHWtil=0, NPcHWtilB=0, NPcHbox=0, NPcHl1=0, NPcHl3=0, NPcHq1=0, NPcHq3=0, NPcHu=0, NPcHud=0, NPcW=0, NPcWtil=0, NPcbW=0, NPcdB=0, NPcdW=0, NPceB=0, NPceH=0, NPceW=0, NPcuB=0, NPcuG=0, NPcuH=0, NPcuW=0, NPlq1=0, NPlq3=0, NPqe=0, NPqu1=0, NPqu8=0, NPquqd1=0, NPquqd8=0

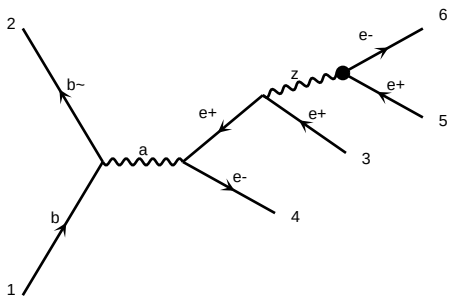

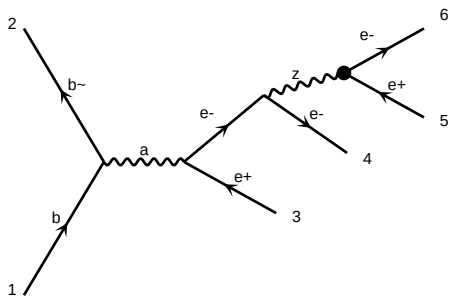

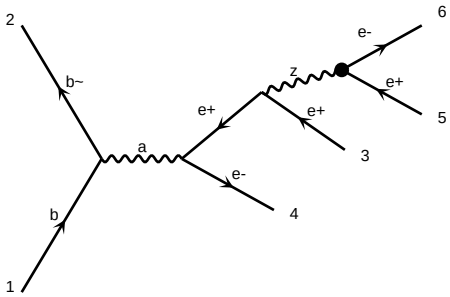

diagram 1006 NP=1, NPcG=0, NPcGtil=0, NPcH=0, NPcHB=0, NPcHDD=0, NPcHW=0, NPcHWB=0, NPcW=0, NPdcHQ3=0, NPdcHQ=0, NPdcHu=0, NPdcHud=0, NPdcHW=0, NPdcW=0, NPdcW3=0, NPdcW3til=0, NPdcW=0, NPdcWtil=0, NPeHD=0, NPeHW=0, NPeHWB=0, NPeW=0, NPlHQ3=0, NPlHQ=0, NPlHW=0, NPlHWB=0, NPlW=0, NPlW3=0, NPlW=0, NPuHQ=0, NPuHu=0, NPuHW=0, NPuHWB=0, NPuW=0, NPHIG=0, NPHW=0, NPW=0, NPWtil=0, NPlebQ=0, NPleQt=0, NPlequ1=0, NPlequ3=0, NPquqd1=0, NPquqd8=0, NPqu1=0, NPqu8=0, NPqd1=0, NPqd8=0, NPlu=0, NPld=0, NPle=0, NPqe=0, NPeu=0, NPed=0, NPll=0, NPll1=0, NPlq1=0, NPlq3=0, NPqq1=0, NPqq11=0, NPqq3=0, NPqq31=0, NPud1=0, NPud8=0, NPuu=0, NPuu1=0, NPdd=0, NPdd1=0, NPeu=0, NPed=0, NPlu=0, NPld=0, NPle=0, NPqe

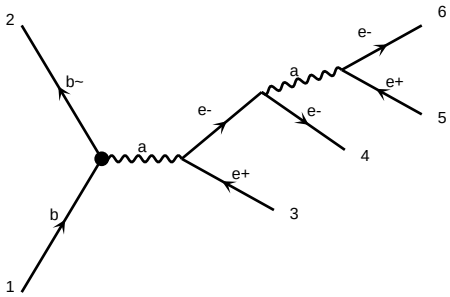

diagram 1021 NP=1, NPcG=0, NPcGtil=0, NPcH=0, NPcHB=0, NPcHDD=0, NPcHW=0, NPcHWB=0, NPcW=0, NPdcHBtil=0, NPdcHW=0, NPeHDD=0, NPeHWB=0, NPeW=0, NPlHDD=0, NPlHWB=0, NPlW=0, NPqHDD=0, NPqHWB=0, NPqW=0, NPuHDD=0, NPuHWB=0, NPuW=0

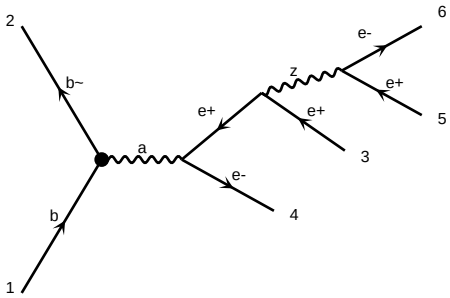

diagram 1024 NP=1, NPcG=0, NPcGtil=0, NPcH=0, NPcHB=0, NPcHDD=0, NPcHW=0, NPcHWB=0, NPcW=0, NPdcHBtil=0, NPdcHW=0, NPeHDD=0, NPeHWB=0, NPeW=0, NPlHDD=0, NPlHWB=0, NPlW=0, NPqHDD=0, NPqHWB=0, NPqW=0, NPuHDD=0, NPuHWB=0, NPuW=0

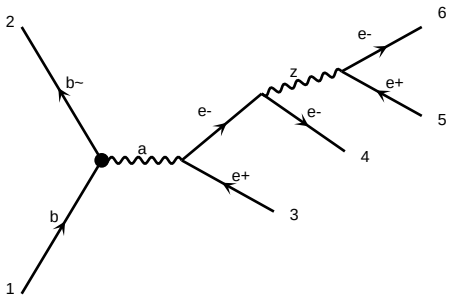

diagram 1027 NP=1, NPcG=0, NPcGtil=0, NPcH=0, NPcHB=0, NPcHDD=0, NPcHW=0, NPcHWB=0, NPcW=0, NPdcHBtil=0, NPdcHW=0, NPeHDD=0, NPeHWB=0, NPeW=0, NPlHDD=0, NPlHWB=0, NPlW=0, NPqHDD=0, NPqHWB=0, NPqW=0, NPuHDD=0, NPuHWB=0, NPuW=0

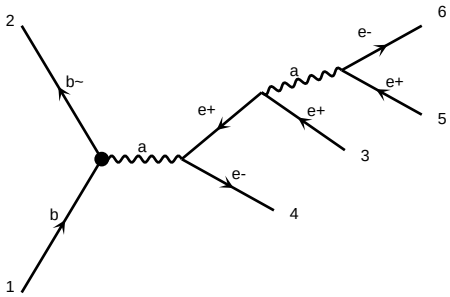

diagram 1030 NP=1, NPcG=0, NPcGtil=0, NPcH=0, NPcHB=0, NPcHDD=0, NPcHW=0, NPcHWB=0, NPcW=0, NPdcHBtil=0, NPdcHW=0, NPeHDD=0, NPeHWB=0, NPeW=0, NPlHDD=0, NPlHWB=0, NPlW=0, NPqHDD=0, NPqHWB=0, NPqW=0, NPuHDD=0, NPuHWB=0, NPuW=0

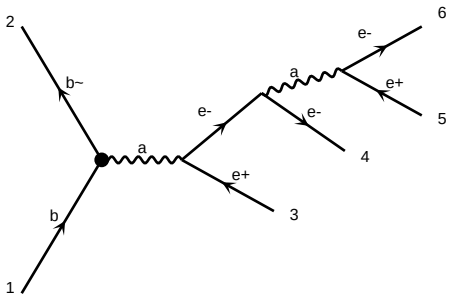

diagram 1033 NP=1, NPcG=0, NPcGtil=0, NPcH=0, NPcHB=0, NPcHDD=0, NPcHW=0, NPcHWB=0, NPcW=0, NPdcHBtil=0, NPdcHW=0, NPeHDD=0, NPeHWB=0, NPeW=0, NPlHDD=0, NPlHWB=0, NPlW=0, NPqHDD=0, NPqHWB=0, NPqW=0, NPuHDD=0, NPuHWB=0, NPuW=0

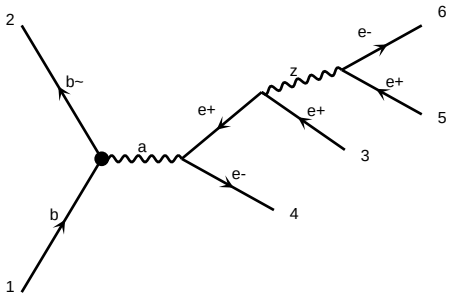

diagram 1036 NP=1, NPcG=0, NPcGtil=0, NPcH=0, NPcHB=0, NPcHDD=0, NPcHW=0, NPcHWB=0, NPcW=0, NPdcHBtil=0, NPdcHW=0, NPeHWB=0, NPeW=0, NPlebQ=0, NPlebQ3=0, NPlebQtil=0, NPledq=0, NPlequ1=0, NPlequ3=0, NPledq=0, NPqe=0, NPqq1=0, NPqq3=0, NPqu=0, NPquqd1=0, NPquqd8=0, NPtG=0, NPtH=0, NPtW=0

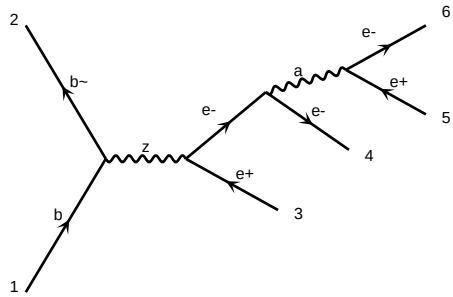

diagram 1037 NP=1, NPcG=0, NPcGtil=0, NPcH=0, NPcHB=0, NPcHDD=0, NPcHW=0, NPcHWB=0, NPcW=0, NPdcHBtil=0, NPdcHW=0, NPeHWB=0, NPeW=0, NPlebQ=0, NPlebQ3=0, NPlebQtil=0, NPledq=0, NPlequ1=0, NPlequ3=0, NPledq=0, NPqe=0, NPqq1=0, NPqq3=0, NPqu=0, NPquqd1=0, NPquqd8=0, NPtG=0, NPtH=0, NPtW=0

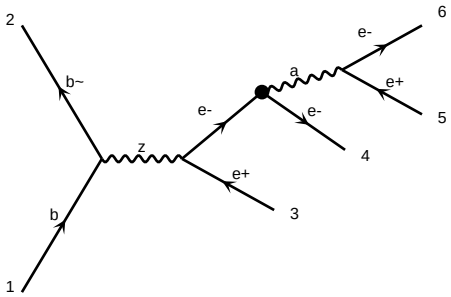

diagram 1038 NP=1, NPcG=0, NPcGtil=0, NPcH=0, NPcHB=0, NPcHDD=0, NPcHW=0, NPcHWB=0, NPcW=0, NPdcHBtil=0, NPdcHW=0, NPeHWB=0, NPeW=0, NPlebQ=0, NPlebQ3=0, NPlebQtil=0, NPledq=0, NPlequ1=0, NPlequ3=0, NPledq=0, NPqe=0, NPqq1=0, NPqq3=0, NPqu=0, NPquqd1=0, NPquqd8=0, NPtG=0, NPtH=0, NPtW=0

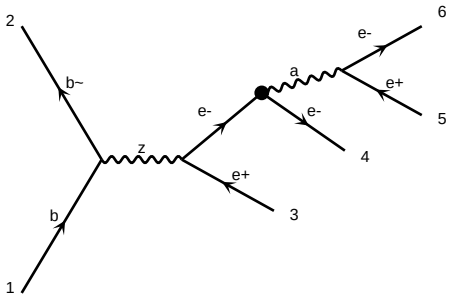

diagram 1039 NP=1, NPcG=0, NPcGtil=0, NPcH=0, NPcHB=0, NPcHDD=0, NPcHW=0, NPcHWB=0, NPcW=0, NPdcHBtil=0, NPdcHW=0, NPeHWB=0, NPeW=0, NPlebQ=0, NPlebQ3=0, NPlebQtil=0, NPledq=0, NPlequ1=0, NPlequ3=0, NPledq=0, NPqe=0, NPqq1=0, NPqq3=0, NPqu=0, NPquqd1=0, NPquqd8=0, NPtG=0, NPtH=0, NPtW=0

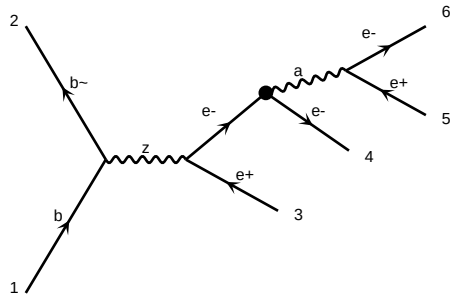

diagram 1040 NP=1, NPcG=0, NPcGtil=0, NPcH=0, NPcHB=0, NPcHDD=0, NPcHW=0, NPcHWB=0, NPcW=0, NPdcHBtil=0, NPdcHW=0, NPeHWB=0, NPeW=0, NPlebQ=0, NPlebQ3=0, NPlebQtil=0, NPledq=0, NPlequ1=0, NPlequ3=0, NPledq=0, NPqe=0, NPqq1=0, NPqq3=0, NPqu=0, NPquqd1=0, NPquqd8=0, NPtG=0, NPtH=0, NPtW=0

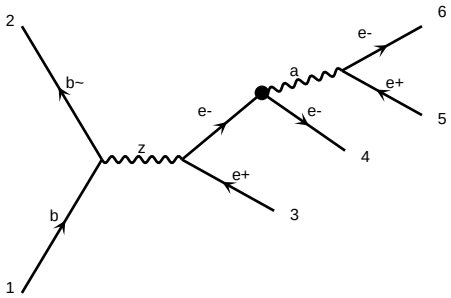

diagram 1041 NP=1, NPcG=0, NPcGtil=0, NPcH=0, NPcHB=0, NPcHDD=0, NPcHW=0, NPcHWB=0, NPcW=0, NPdcHBtil=0, NPdcHW=0, NPeHWB=0, NPeW=0, NPlebQ=0, NPlebQ3=0, NPlebQtil=0, NPledq=0, NPlequ1=0, NPlequ3=0, NPledq=0, NPqe=0, NPqq1=0, NPqq3=0, NPqu=0, NPquqd1=0, NPquqd8=0, NPtG=0, NPtH=0, NPtW=0

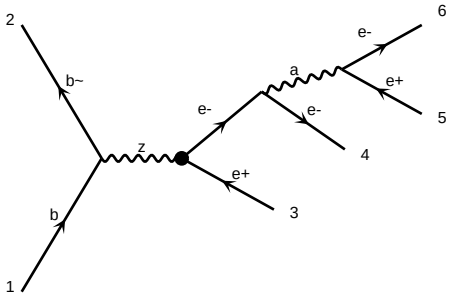

diagram 1042 NP=1, NPcG=0, NPcGtil=0, NPcH=0, NPcHB=0, NPcHDD=0, NPcHW=0, NPcHWB=0, NPcW=0, NPdcHBtil=0, NPdcHW=0, NPeHWB=0, NPeW=0, NPlebQ=0, NPlebQ3=0, NPlebQtil=0, NPledq=0, NPlequ1=0, NPlequ3=0, NPledq=0, NPqe=0, NPqq1=0, NPqq3=0, NPqu=0, NPquqd1=0, NPquqd8=0, NPtG=0, NPtH=0, NPtW=0

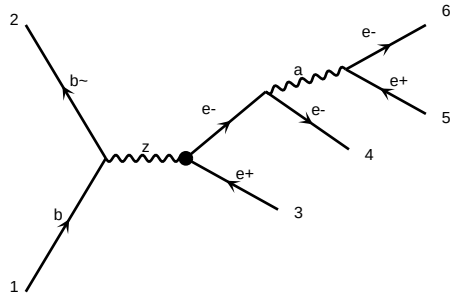

diagram 1043 NP=1, NPcG=0, NPcGtil=0, NPcH=0, NPcHB=0, NPcHDD=0, NPcHW=0, NPcHWB=0, NPcW=0, NPdcHBtil=0, NPdcHW=0, NPeHWB=0, NPeW=0, NPlebQ=0, NPlebQ3=0, NPlebQtil=0, NPledq=0, NPlequ1=0, NPlequ3=0, NPledq=0, NPqe=0, NPqq1=0, NPqq3=0, NPqu=0, NPquqd1=0, NPquqd8=0, NPtG=0, NPtH=0, NPtW=0

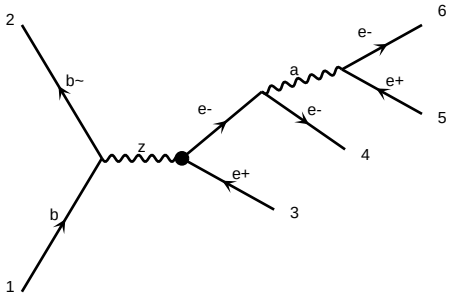

diagram 1044 NP=1, NPcG=0, NPcGtil=0, NPcH=0, NPcHB=0, NPcHDD=0, NPcHW=0, NPcHWB=0, NPcW=0, NPdcHBtil=0, NPdcHW=0, NPeHWB=0, NPeW=0, NPlebQ=0, NPlebQ3=0, NPlebQtil=0, NPledq=0, NPlequ1=0, NPlequ3=0, NPledq=0, NPqe=0, NPqq1=0, NPqq3=0, NPqu=0, NPquqd1=0, NPquqd8=0, NPtG=0, NPtH=0, NPtW=0

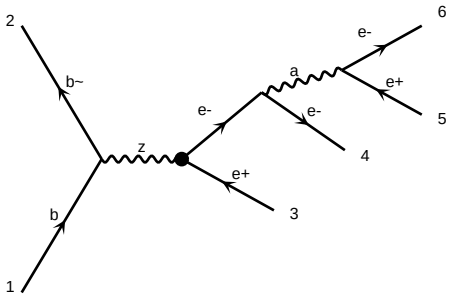

diagram 1045 NP=1, NPcG=0, NPcGtil=0, NPcH=0, NPcHB=0, NPcHDD=0, NPcHW=0, NPcHWB=0, NPcW=0, NPdcHBtil=0, NPdcHW=0, NPeHWB=0, NPeW=0, NPlebQ=0, NPlebQ3=0, NPlebQtil=0, NPledq=0, NPlequ1=0, NPlequ3=0, NPledq=0, NPqe=0, NPqq1=0, NPqq3=0, NPqu=0, NPquqd1=0, NPquqd8=0, NPtG=0, NPtH=0, NPtW=0

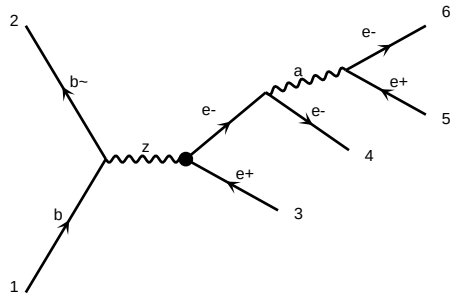

diagram 1046 NP=1, NPcG=0, NPcGtil=0, NPcH=0, NPcHB=0, NPcHDD=0, NPcHW=0, NPcHWB=0, NPcW=0, NPdcHBtil=0, NPdcHW=0, NPeHWB=0, NPeW=0, NPlebQ=0, NPlebQ3=0, NPlebQtil=0, NPledq=0, NPlequ1=0, NPlequ3=0, NPledq=0, NPqe=0, NPqq1=0, NPqq3=0, NPqu=0, NPquqd1=0, NPquqd8=0, NPtG=0, NPtH=0, NPtW=0

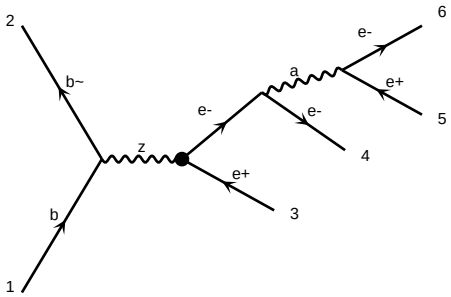

diagram 1047 NP=1, NPcG=0, NPcGtil=0, NPcH=0, NPcHB=0, NPcHDD=0, NPcHW=0, NPcHWB=0, NPcW=0, NPdcHBtil=0, NPdcHW=0, NPeHWB=0, NPeW=0, NPlebQ=0, NPlebQ3=0, NPlebQtil=0, NPledq=0, NPlequ1=0, NPlequ3=0, NPledq=0, NPqe=0, NPqq1=0, NPqq3=0, NPqu=0, NPquqd1=0, NPquqd8=0, NPtG=0, NPtH=0, NPtW=0

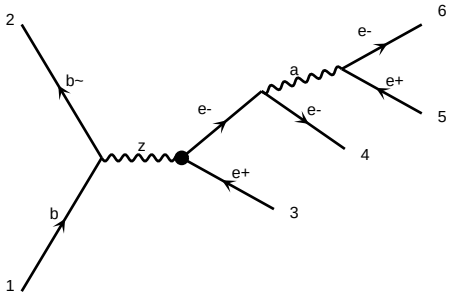

diagram 1048 NP=1, NPcG=0, NPcGtil=0, NPcH=0, NPcHB=0, NPcHDD=0, NPcHW=0, NPcHWB=0, NPcW=0, NPdcHBtil=0, NPdcHW=0, NPeHWB=0, NPeW=0, NPlebQ=0, NPlebQ3=0, NPlebQtil=0, NPledq=0, NPlequ1=0, NPlequ3=0, NPledq=0, NPqe=0, NPqq1=0, NPqq3=0, NPqu=0, NPquqd1=0, NPquqd8=0, NPtG=0, NPtH=0, NPtW=0

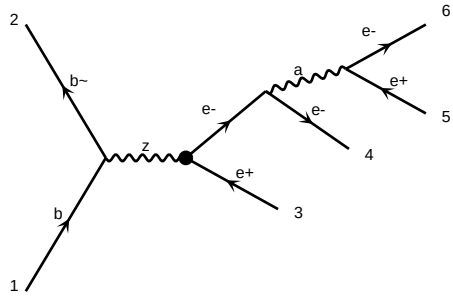

diagram 1049 NP=1, NPcG=0, NPcGtil=0, NPcH=0, NPcHB=0, NPcHDD=0, NPcHW=0, NPcHWB=0, NPcW=0, NPdcHBtil=0, NPdcHW=0, NPeHWB=0, NPeW=0, NPlebQ=0, NPlebQ3=0, NPlebQtil=0, NPledq=0, NPlequ1=0, NPlequ3=0, NPledq=0, NPqe=0, NPqq1=0, NPqq3=0, NPqu=0, NPquqd1=0, NPquqd8=0, NPtG=0, NPtH=0, NPtW=0

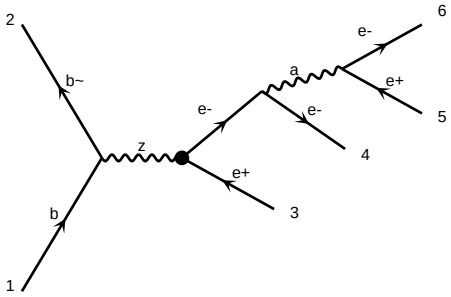

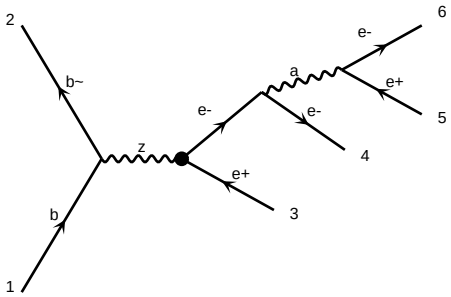

diagram 1051 NP=1, NPcG=0, NPcGtil=0, NPcH=0, NPcHB=0, NPcHDD=0, NPcHW=0, NPcHWB=0, NPcW=0, NPcWtil=0, NPdeltaB=0, NPdeltaW=0, NPdeltaWB=0, NPlamb=0, NPll1=0, NPqq1=0, NPqq3=0, NPqu1=0, NPqu8=0, NPquqd1=0, NPquqd8=0, NPtG=0, NPtW=0

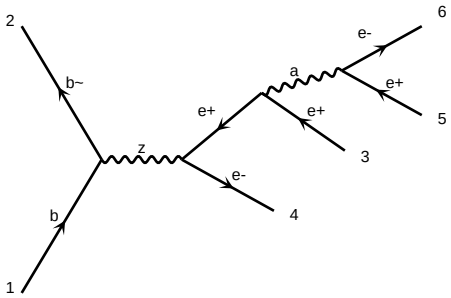

diagram 1054 NP=0, NPcG=0, NPcGtil=0, NPcH=0, NPcHB=0, NPcHDD=0, NPcHW=0, NPcHWB=0, NPcW=0, NPcWtil=0, NPdeltaB=0, NPdeltaW=0, NPdeltaWB=0, NPlamb=0, NPll1=0, NPqq1=0, NPqq3=0, NPqu1=0, NPqu8=0, NPquqd1=0, NPquqd8=0, NPtG=0, NPtW=0

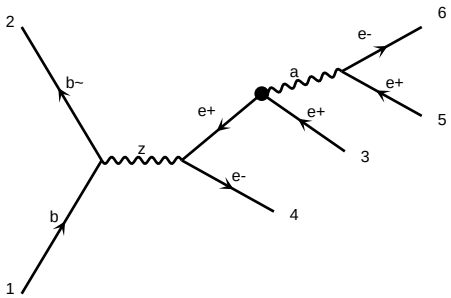

diagram 1057 NP=1, NPcG=0, NPcGtil=0, NPcH=0, NPcHB=0, NPcHDD=0, NPcHW=0, NPcHWB=0, NPcW=0, NPcWtil=0, NPdeltaB=0, NPdeltaW=0, NPdeltaWB=0, NPlamb=0, NPll1=0, NPqq1=0, NPqq3=0, NPqu1=0, NPqu8=0, NPquqd1=0, NPquqd8=0, NPtG=0, NPtW=0

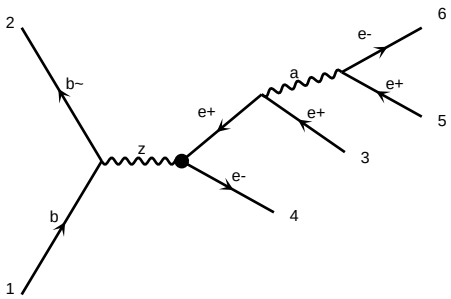

diagram 1060 NP=1, NPcG=0, NPcGtil=0, NPcH=0, NPcHB=0, NPcHDD=0, NPcHW=0, NPcHWB=0, NPcW=0, NPcWtil=0, NPdeltaB=0, NPdeltaW=0, NPdeltaWB=0, NPlamb=0, NPll1=0, NPqq1=0, NPqq3=0, NPqu1=0, NPqu8=0, NPquqd1=0, NPquqd8=0, NPtG=0, NPtW=0

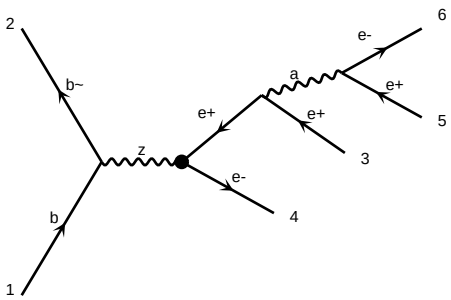

diagram 1063 NP=1, NPcG=0, NPcGtil=0, NPcH=0, NPcHB=0, NPcHDD=0, NPcHW=0, NPcHWB=0, NPcW=0, NPcWtil=0, NPdeltaB=0, NPdeltaW=0, NPdeltaWB=0, NPlamb=0, NPll1=0, NPqq1=0, NPqq3=0, NPqu1=0, NPqu8=0, NPquqd1=0, NPquqd8=0, NPtG=0, NPtW=0

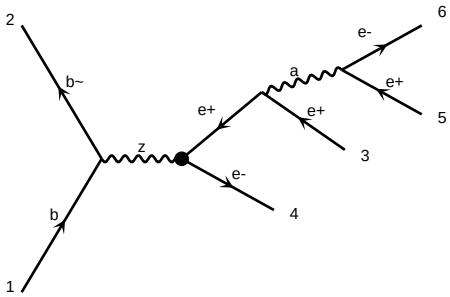

diagram 1066 NP=1, NPcG=0, NPcGtil=0, NPcH=0, NPcHB=0, NPcHDD=0, NPcHW=0, NPcHWB=0, NPcW=0, NPcWtil=0, NPlq1=0, NPlq3=0, NPqe=0, NPqu1=0, NPqu8=0, NPquqd1=0, NPquqd8=0

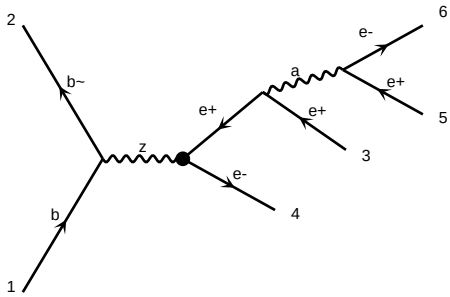

diagram 1067 NP=1, NPcG=0, NPcGtil=0, NPcH=0, NPcHB=0, NPcHDD=0, NPcHW=0, NPcHWB=0, NPcW=0, NPcWtil=0, NPlq1=0, NPlq3=0, NPqe=0, NPqu1=0, NPqu8=0, NPquqd1=0, NPquqd8=0

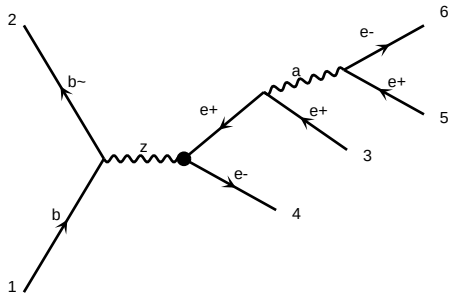

diagram 1068 NP=1, NPcG=0, NPcGtil=0, NPcH=0, NPcHB=0, NPcHDD=0, NPcHW=0, NPcHWB=0, NPcW=0, NPcWtil=0, NPlq1=0, NPlq3=0, NPqe=0, NPqu1=0, NPqu8=0, NPquqd1=0, NPquqd8=0

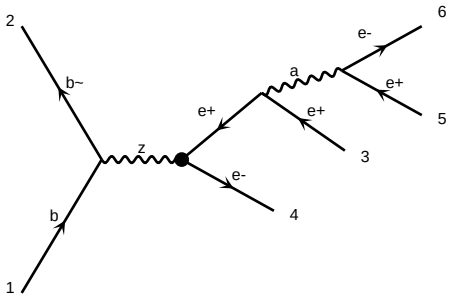

diagram 1069 NP=1, NPcG=0, NPcGtil=0, NPcH=0, NPcHB=0, NPcHDD=0, NPcHW=0, NPcHWB=0, NPcW=0, NPcWtil=0, NPlq1=0, NPlq3=0, NPqe=0, NPqu1=0, NPqu8=0, NPquqd1=0, NPquqd8=0

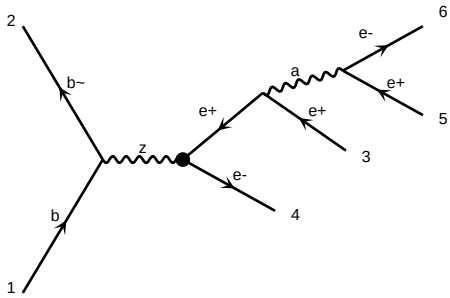

diagram 1070 NP=1, NPcG=0, NPcGtil=0, NPcH=0, NPcHB=0, NPcHDD=0, NPcHW=0, NPcHWB=0, NPcW=0, NPcWtil=0, NPlq1=0, NPlq3=0, NPqe=0, NPqu1=0, NPqu8=0, NPquqd1=0, NPquqd8=0

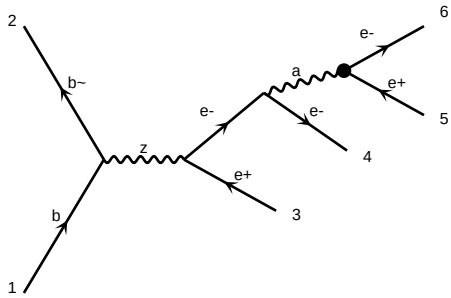

diagram 1071 NP=1, NPcG=0, NPcGtil=0, NPcH=0, NPcHB=0, NPcHDD=0, NPcHW=0, NPcHWB=0, NPcW=0, NPcWtil=0, NPlq1=0, NPlq3=0, NPqe=0, NPqu1=0, NPqu8=0, NPquqd1=0, NPquqd8=0

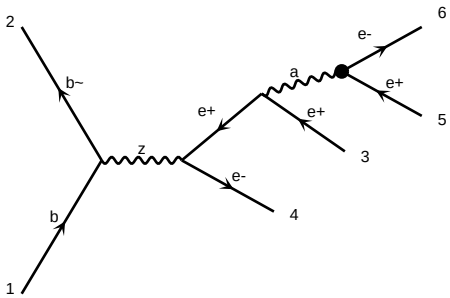

diagram 1072 NP=1, NPcG=0, NPcGtil=0, NPcH=0, NPcHB=0, NPcHDD=0, NPcHW=0, NPcHWB=0, NPcW=0, NPcWtil=0, NPlq1=0, NPlq3=0, NPqe=0, NPqu1=0, NPqu8=0, NPquqd1=0, NPquqd8=0

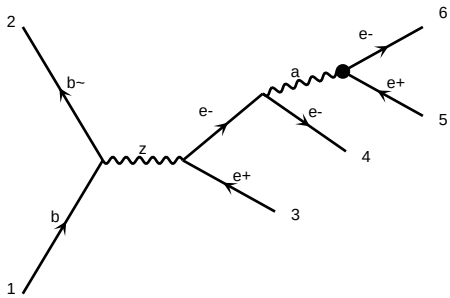

diagram 1073 NP=1, NPcG=0, NPcGtil=0, NPcH=0, NPcHB=0, NPcHDD=0, NPcHW=0, NPcHWB=0, NPcW=0, NPcWtil=0, NPlq1=0, NPlq3=0, NPqe=0, NPqu1=0, NPqu8=0, NPquqd1=0, NPquqd8=0

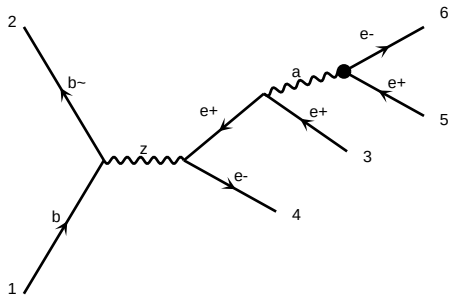

diagram 1074 NP=1, NPcG=0, NPcGtil=0, NPcH=0, NPcHB=0, NPcHDD=0, NPcHW=0, NPcHWB=0, NPcW=0, NPcWtil=0, NPlq1=0, NPlq3=0, NPqe=0, NPqu1=0, NPqu8=0, NPquqd1=0, NPquqd8=0

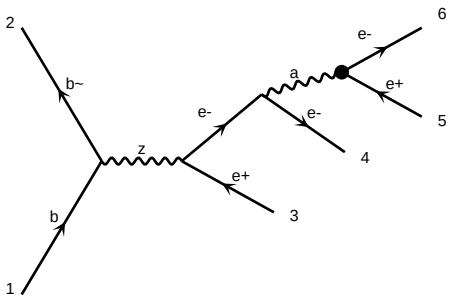

diagram 1075 NP=1, NPcG=0, NPcGtil=0, NPcH=0, NPcHB=0, NPcHDD=0, NPcHW=0, NPcHWB=0, NPcW=0, NPcWtil=0, NPlq1=0, NPlq3=0, NPqe=0, NPqu1=0, NPqu8=0, NPquqd1=0, NPquqd8=0

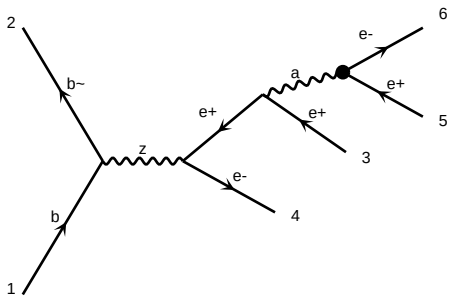

diagram 1076 NP=1, NPcG=0, NPcGtil=0, NPcH=0, NPcHB=0, NPcHDD=0, NPcHW=0, NPcHWB=0, NPcW=0, NPcWtil=0, NPlq1=0, NPlq3=0, NPqe=0, NPqu1=0, NPqu8=0, NPquqd1=0, NPquqd8=0

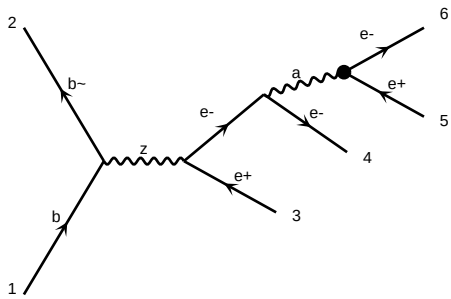

diagram 1077 NP=1, NPcG=0, NPcGtil=0, NPcH=0, NPcHB=0, NPcHDD=0, NPcHW=0, NPcHWB=0, NPcW=0, NPcWtil=0, NPlq1=0, NPlq3=0, NPqe=0, NPqu1=0, NPqu8=0, NPquqd1=0, NPquqd8=0

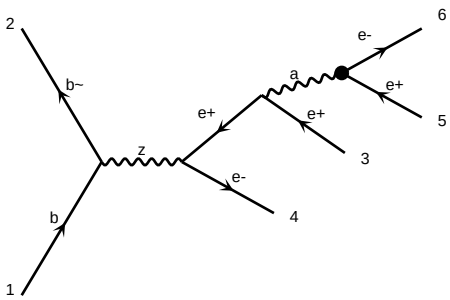

diagram 1078 NP=1, NPcG=0, NPcGtil=0, NPcH=0, NPcHB=0, NPcHDD=0, NPcHW=0, NPcHWB=0, NPcW=0, NPcWtil=0, NPlq1=0, NPlq3=0, NPqe=0, NPqu1=0, NPqu8=0, NPquqd1=0, NPquqd8=0

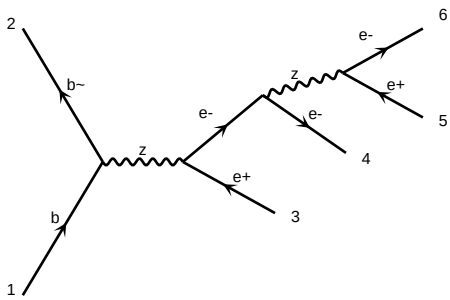

diagram 1079 NP=1, NPcG=0, NPcGtil=0, NPcH=0, NPcHB=0, NPcHDD=0, NPcHW=0, NPcHWB=0, NPcW=0, NPcWtil=0, NPlq1=0, NPlq3=0, NPqe=0, NPqu1=0, NPqu8=0, NPquqd1=0, NPquqd8=0

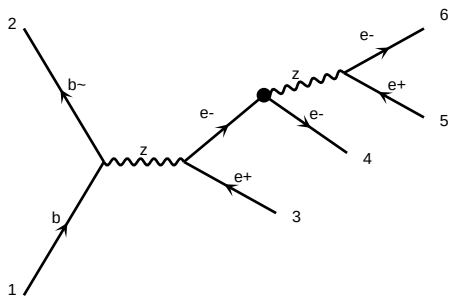

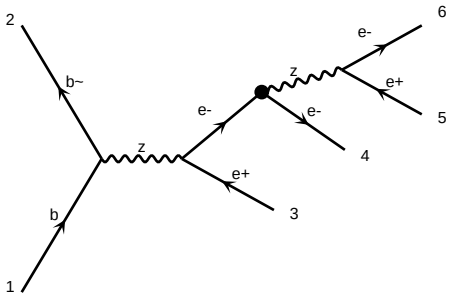

diagram 1081 NP=1, NPcG=0, NPcGtil=0, NPcH=0, NPcHB=0, NPcHDD=0, NPcHW=0, NPcHWB=0, NPcW=0, NPlB=0, NPlH=0, NPlHD=0, NPlHe=0, NPlHl=0, NPlHq=0, NPlHu=0, NPlW=0, NPlWH=0, NPlWq=0, NPuB=0, NPuG=0, NPuH=0, NPuW=0, NPqB=0, NPqG=0, NPqH=0, NPqW=0, NPquB=0, NPquG=0, NPquH=0, NPquW=0, NPqu1=0, NPqu8=0, NPqd1=0, NPqd8=0, NPqq1=0, NPqq3=0, NPle=0, NPll=0, NPlq1=0, NPlq3=0, NPeu=0, NPed=0, NPlu=0, NPld=0, NPqe=0

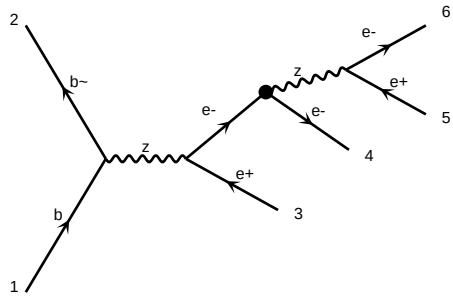

diagram 1082 NP=1, NPcG=0, NPcGtil=0, NPcH=0, NPcHB=0, NPcHDD=0, NPcHW=0, NPcHWB=0, NPcW=0, NPlB=0, NPlH=0, NPlHD=0, NPlHe=0, NPlHl=0, NPlHq=0, NPlHu=0, NPlW=0, NPlWH=0, NPlWq=0, NPuB=0, NPuG=0, NPuH=0, NPuW=0, NPqB=0, NPqG=0, NPqH=0, NPqW=0, NPquB=0, NPquG=0, NPquH=0, NPquW=0, NPqu1=0, NPqu8=0, NPqd1=0, NPqd8=0, NPqq1=0, NPqq3=0, NPle=0, NPll=0, NPlq1=0, NPlq3=0, NPeu=0, NPed=0, NPlu=0, NPld=0, NPqe=0

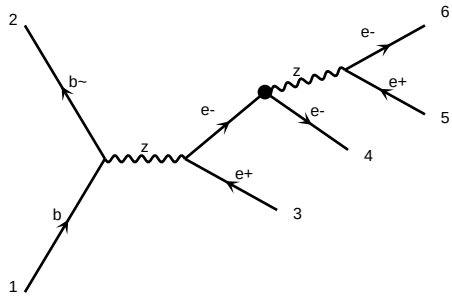

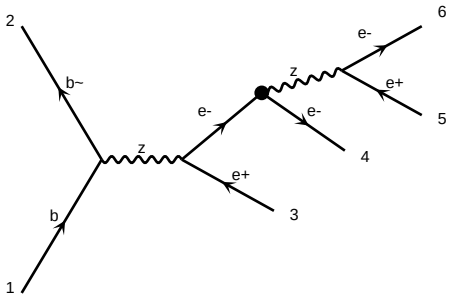

diagram 1084 NP=1, NPcG=0, NPcGtil=0, NPcH=0, NPcHB=0, NPcHDD=0, NPcHW=0, NPcHWB=0, NPcW=0, NPlB=0, NPlH=0, NPlHD=0, NPlHe=0, NPlHl=0, NPlHq=0, NPlHu=0, NPlW=0, NPlWH=0, NPlWq=0, NPuB=0, NPuG=0, NPuH=0, NPuW=0, NPqB=0, NPqG=0, NPqH=0, NPqW=0, NPquB=0, NPquG=0, NPquH=0, NPquW=0, NPqu1=0, NPqu8=0, NPqd1=0, NPqd8=0, NPqq1=0, NPqq3=0, NPle=0, NPll=0, NPlq1=0, NPlq3=0, NPeu=0, NPed=0, NPlu=0, NPld=0, NPqe=0

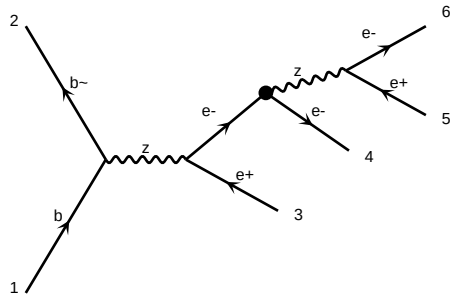

diagram 1085 NP=1, NPcG=0, NPcGtil=0, NPcH=0, NPcHB=0, NPcHDD=0, NPcHW=0, NPcHWB=0, NPcW=0, NPlB=0, NPlH=0, NPlHD=0, NPlHe=0, NPlHl=0, NPlHq=0, NPlHu=0, NPlW=0, NPlWH=0, NPlWq=0, NPuB=0, NPuG=0, NPuH=0, NPuW=0, NPqB=0, NPqG=0, NPqH=0, NPqW=0, NPquB=0, NPquG=0, NPquH=0, NPquW=0, NPqu1=0, NPqu8=0, NPqd1=0, NPqd8=0, NPqq1=0, NPqq3=0, NPle=0, NPll=0, NPlq1=0, NPlq3=0, NPeu=0, NPed=0, NPlu=0, NPld=0, NPqe=0

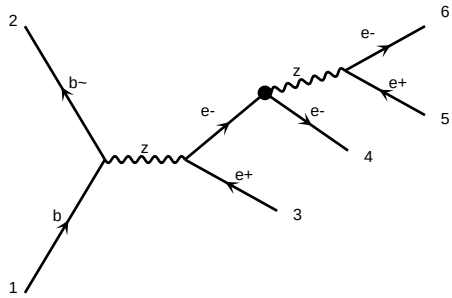

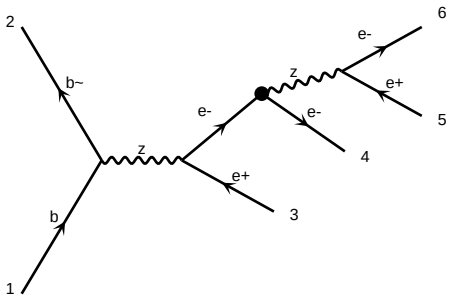

diagram 1087 NP=1, NPcG=0, NPcGtil=0, NPcH=0, NPcHB=0, NPcHDD=0, NPcHW=0, NPcHWB=0, NPcW=0, NPlB=0, NPlH=0, NPlHD=0, NPlHe=0, NPlHl=0, NPlHq=0, NPlHu=0, NPlW=0, NPlWH=0, NPlWq=0, NPuB=0, NPuG=0, NPuH=0, NPuW=0, NPqB=0, NPqG=0, NPqH=0, NPqW=0, NPquB=0, NPquG=0, NPquH=0, NPquW=0, NPqu1=0, NPqu8=0, NPqd1=0, NPqd8=0, NPqq1=0, NPqq3=0, NPle=0, NPll=0, NPlq1=0, NPlq3=0, NPeu=0, NPed=0, NPlu=0, NPld=0, NPqe=0

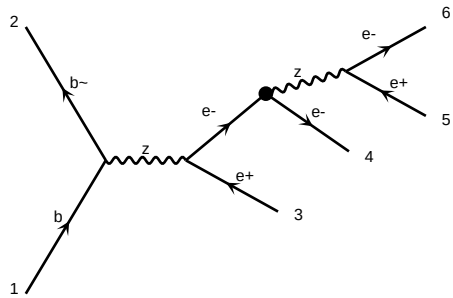

diagram 1088 NP=1, NPcG=0, NPcGtil=0, NPcH=0, NPcHB=0, NPcHDD=0, NPcHW=0, NPcHWB=0, NPcW=0, NPlB=0, NPlH=0, NPlHD=0, NPlHe=0, NPlHl=0, NPlHq=0, NPlHu=0, NPlW=0, NPlWH=0, NPlWq=0, NPuB=0, NPuG=0, NPuH=0, NPuW=0, NPqB=0, NPqG=0, NPqH=0, NPqW=0, NPquB=0, NPquG=0, NPquH=0, NPquW=0, NPqu1=0, NPqu8=0, NPqd1=0, NPqd8=0, NPqq1=0, NPqq3=0, NPle=0, NPll=0, NPlq1=0, NPlq3=0, NPeu=0, NPed=0, NPlu=0, NPld=0, NPqe=0

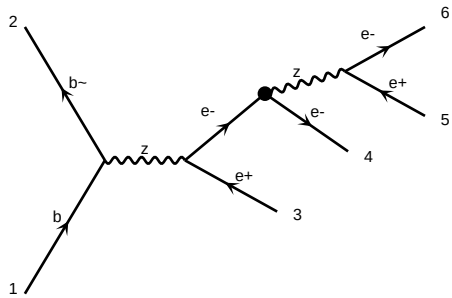

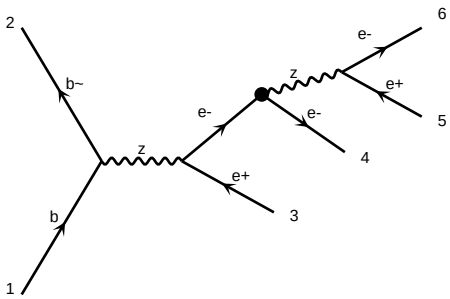

diagram 1090 NP=1, NPcG=0, NPcGtil=0, NPcH=0, NPcHB=0, NPcHDD=0, NPcHW=0, NPcHWB=0, NPcW=0, NPlB=0, NPlH=0, NPlHD=0, NPlHe=0, NPlHl=0, NPlHq=0, NPlHu=0, NPlW=0, NPlWH=0, NPlWq=0, NPuB=0, NPuG=0, NPuH=0, NPuW=0, NPqB=0, NPqG=0, NPqH=0, NPqW=0, NPquB=0, NPquG=0, NPquH=0, NPquW=0, NPqu1=0, NPqu8=0, NPqd1=0, NPqd8=0, NPqq1=0, NPqq3=0, NPle=0, NPll=0, NPlq1=0, NPlq3=0, NPeu=0, NPed=0, NPlu=0, NPld=0, NPqe=0

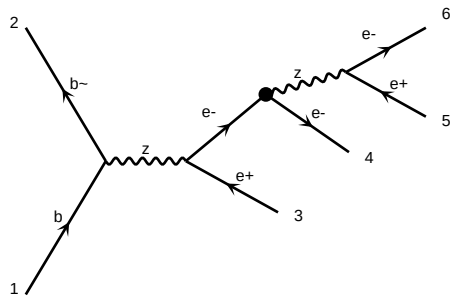

diagram 1091 NP=1, NPcG=0, NPcGtil=0, NPcH=0, NPcHB=0, NPcHDD=0, NPcHW=0, NPcHWB=0, NPcW=0, NPlB=0, NPlH=0, NPlHD=0, NPlHe=0, NPlHl=0, NPlHq=0, NPlHu=0, NPlW=0, NPlWH=0, NPlWq=0, NPuB=0, NPuG=0, NPuH=0, NPuW=0, NPqB=0, NPqG=0, NPqH=0, NPqW=0, NPquB=0, NPquG=0, NPquH=0, NPquW=0, NPqu1=0, NPqu8=0, NPqd1=0, NPqd8=0, NPqq1=0, NPqq3=0, NPle=0, NPll=0, NPlq1=0, NPlq3=0, NPeu=0, NPed=0, NPlu=0, NPld=0, NPqe=0

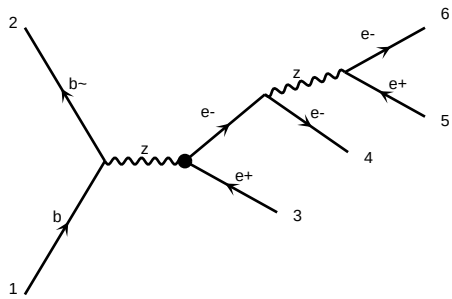

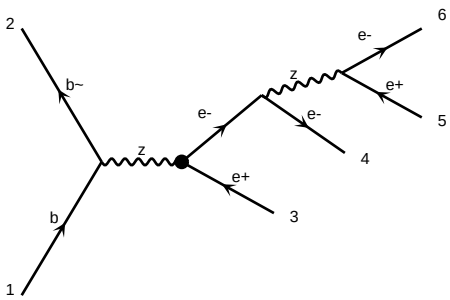

diagram 1093 NP=1, NPcG=0, NPcGtil=0, NPcH=0, NPcHB=0, NPcHDD=0, NPcHW=0, NPcHWB=0, NPcW=0, NPlB=0, NPlH=0, NPlHD=0, NPlHe=0, NPlHl=0, NPlHq=0, NPlHu=0, NPlW=0, NPlWH=0, NPlWq=0, NPuB=0, NPuG=0, NPuH=0, NPuW=0, NPqB=0, NPqG=0, NPqH=0, NPqW=0, NPquB=0, NPquG=0, NPquH=0, NPquW=0, NPqu1=0, NPqu8=0, NPqd1=0, NPqd8=0, NPqq1=0, NPqq3=0, NPle=0, NPll=0, NPlq1=0, NPlq3=0, NPeu=0, NPed=0, NPlu=0, NPld=0, NPqe=0

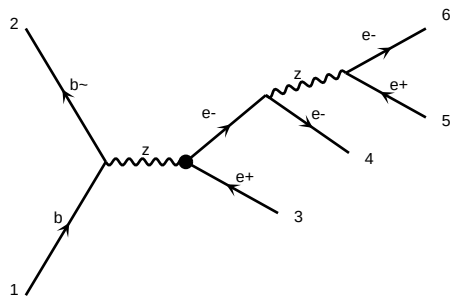

diagram 1094 NP=1, NPcG=0, NPcGtil=0, NPcH=0, NPcHB=0, NPcHDD=0, NPcHW=0, NPcHWB=0, NPcW=0, NPlB=0, NPlH=0, NPlHD=0, NPlHe=0, NPlHl=0, NPlHq=0, NPlHu=0, NPlW=0, NPlWH=0, NPlWq=0, NPuB=0, NPuG=0, NPuH=0, NPuW=0, NPqB=0, NPqG=0, NPqH=0, NPqW=0, NPquB=0, NPquG=0, NPquH=0, NPquW=0, NPqu1=0, NPqu8=0, NPqd1=0, NPqd8=0, NPqq1=0, NPqq3=0, NPle=0, NPll=0, NPlq1=0, NPlq3=0, NPeu=0, NPed=0, NPlu=0, NPld=0, NPqe=0

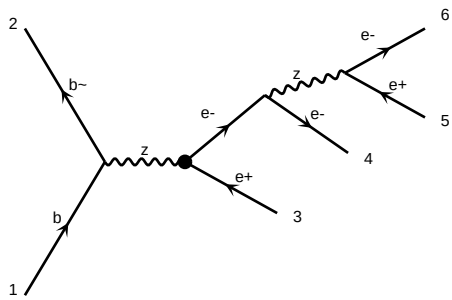

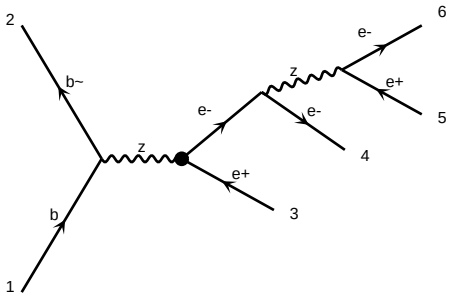

diagram 1096 NP=1, NPcG=0, NPcGtil=0, NPcH=0, NPcHB=0, NPcHDD=0, NPcHW=0, NPcHWB=0, NPcW=0, NPeHB=0, NPeW=0, NPlB=0, NPlH=0, NPlHB=0, NPlHW=0, NPlW=0, NPqB=0, NPqG=0, NPqH=0, NPqHB=0, NPqHW=0, NPqW=0, NPuB=0, NPuG=0, NPuH=0, NPuW=0, NPdB=0, NPdG=0, NPdH=0, NPdW=0, NPeB=0, NPeH=0, NPeW=0, NPlq1=0, NPlq3=0, NPlu=0, NPld=0, NPle=0, NPqe=0, NPqu1=0, NPqu8=0, NPqd1=0, NPqd8=0, NPlequ1=0, NPlequ3=0, NPed=0, NPeu=0, NPud1=0, NPud8=0, NPledq=0, NPquqd1=0, NPquqd8=0, NPlqd1=0, NPlqd3=0, NPqqq1=0, NPqqq3=0, NPlle=0, NPlqe=0, NPqqu1=0, NPqqu8=0, NPqqd1=0, NPqqd8=0, NPlld=0, NPlqu1=0, NPlqu3=0, NPeeu=0, NPeld=0, NPqed=0, NPqeu=0, NPqld1=0, NPqld3=0, NPuud1=0, NPuud8=0, NPlud1=0, NPlud3=0, NPeqd1=0, NPeqd8=0, NPlqud1=0, NPlqud3=0, NPqqqd1=0, NPqqqd3=0, NPlqqq1=0, NPlqqq3=0, NPlled=0, NPlqed=0, NPqqed1=0, NPqqed8=0, NPlqqu1=0, NPlqqu8=0, NPlqqd1=0, NPlqqd8=0, NPlluu=0, NPlqeu=0, NPqqeu1=0, NPqqeu8=0, NPqqqu1=0, NPqqqu3=0, NPlqud1=0, NPlqud8=0, NPlqqqd1=0, NPlqqqd3=0, NPqqqq1=0, NPqqqq3=0, NPqqqq8=0, NPqqqq9=0, NPqqqq10=0, NPqqqq11=0, NPqqqq12=0, NPqqqq13=0, NPqqqq14=0, NPqqqq15=0, NPqqqq16=0, NPqqqq17=0, NPqqqq18=0, NPqqqq19=0, NPqqqq20=0, NPqqqq21=0, NPqqqq22=0, NPqqqq23=0, NPqqqq24=0, NPqqqq25=0, NPqqqq26=0, NPqqqq27=0, NPqqqq28=0, NPqqqq29=0, NPqqqq30=0, NPqqqq31=0, NPqqqq32=0, NPqqqq33=0, NPqqqq34=0, NPqqqq35=0, NPqqqq36=0, NPqqqq37=0, NPqqqq38=0, NPqqqq39=0, NPqqqq40=0, NPqqqq41=0, NPqqqq42=0, NPqqqq43=0, NPqqqq44=0, NPqqqq45=0, NPqqqq46=0, NPqqqq47=0,

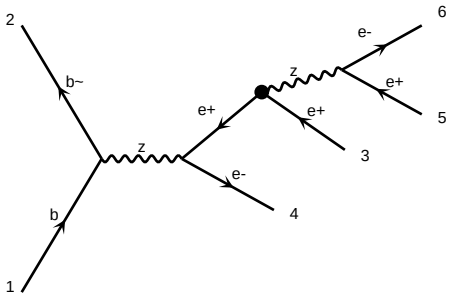

diagram 1111 NP=1, NPcG=0, NPcGtil=0, NPcH=0, NPcHB=0, NPcHDD=0, NPcHW=0, NPcHWB=0, NPcW=0, NPdcHBtil=0, NPdcHWtil=0, NPeHRe=0, NPeHWRe=0, NPlebQR1=0, NPlebQR3=0, NPlebQR8=0, NPlebRR1=0, NPlebRR8=0, NPlqR1=0, NPlqR3=0, NPlqR8=0, NPuHRe=0, NPuWRe=0, NPquqd1=0, NPquqd8=0, NPqqq1=0, NPqqq3=0, NPquqd1Im=0, NPquqd8Im=0, NPqqq1Im=0, NPqqq3Im=0

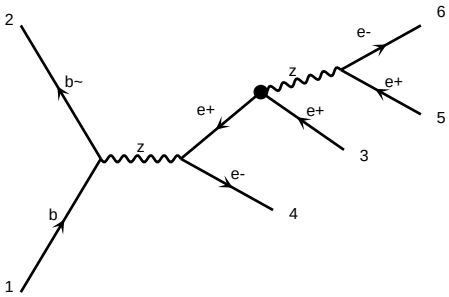

diagram 1112 NP=1, NPcG=0, NPcGtil=0, NPcH=0, NPcHB=0, NPcHDD=0, NPcHW=0, NPcHWB=0, NPcW=0, NPdcHBtil=0, NPdcHWtil=0, NPeHRe=0, NPeHWRe=0, NPlebQR1=0, NPlebQR3=0, NPlebQR8=0, NPlebRR1=0, NPlebRR8=0, NPlqR1=0, NPlqR3=0, NPlqR8=0, NPuHRe=0, NPuWRe=0, NPquqd1=0, NPquqd8=0, NPqqq1=0, NPqqq3=0, NPquqd1Im=0, NPquqd8Im=0, NPqqq1Im=0, NPqqq3Im=0

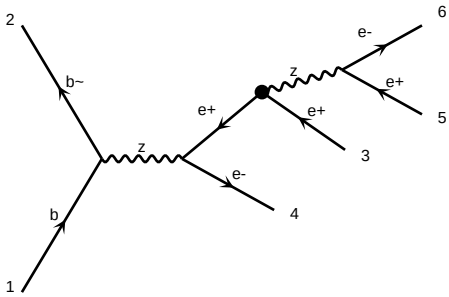

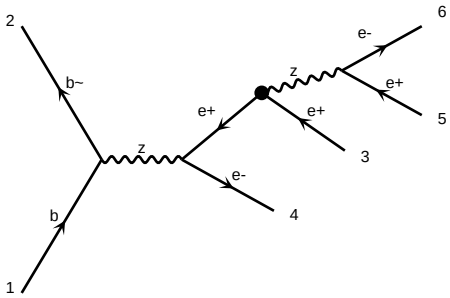

diagram 1114 NP=1, NPcG=0, NPcGtil=0, NPcH=0, NPcHB=0, NPcHDD=0, NPcHW=0, NPcHWB=0, NPcW=0, NPdcHBtil=0, NPdcHWtil=0, NPeHRe=0, NPeHWRe=0, NPlebQR1=0, NPlebQR3=0, NPlebQR8=0, NPlebRR1=0, NPlebRR8=0, NPlqR1=0, NPlqR3=0, NPlqR8=0, NPuHRe=0, NPuWRe=0, NPquqd1=0, NPquqd8=0, NPqqq1=0, NPqqq3=0, NPquqd1Im=0, NPquqd8Im=0, NPqqq1Im=0, NPqqq3Im=0

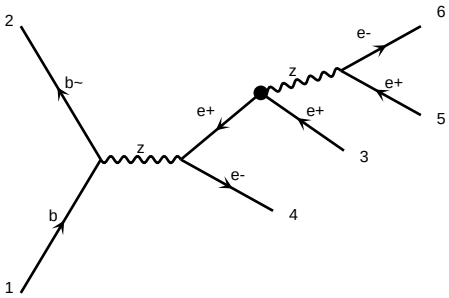

diagram 1115 NP=1, NPcG=0, NPcGtil=0, NPcH=0, NPcHB=0, NPcHDD=0, NPcHW=0, NPcHWB=0, NPcW=0, NPdcHBtil=0, NPdcHWtil=0, NPeHRe=0, NPeHWRe=0, NPlebQR1=0, NPlebQR3=0, NPlebQR8=0, NPlebRR1=0, NPlebRR8=0, NPlqR1=0, NPlqR3=0, NPlqR8=0, NPuHRe=0, NPuWRe=0, NPquqd1=0, NPquqd8=0, NPqqq1=0, NPqqq3=0, NPquqd1Im=0, NPquqd8Im=0, NPqqq1Im=0, NPqqq3Im=0

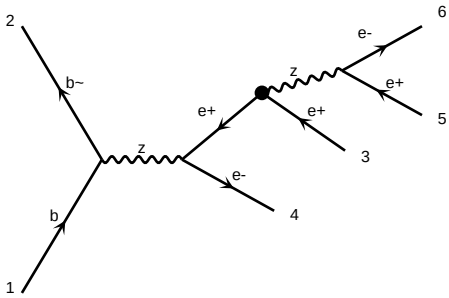

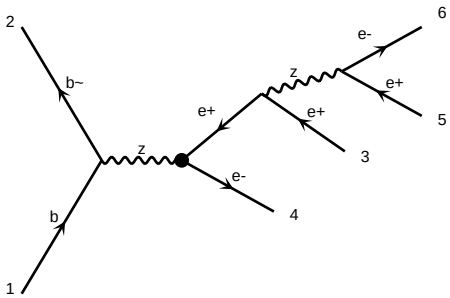

diagram 1117 NP=1, NPcG=0, NPcGtil=0, NPcH=0, NPcHB=0, NPcHDD=0, NPcHW=0, NPcHWB=0, NPcW=0, NPdcHBtil=0, NPdcHWtil=0, NPeHRe=0, NPeHWRe=0, NPlebQR1=0, NPlebQR3=0, NPlebQR8=0, NPlebRR1=0, NPlebRR8=0, NPlqR1=0, NPlqR3=0, NPlqR8=0, NPuHRe=0, NPuWRe=0, NPquqd1=0, NPquqd8=0, NPqqq1=0, NPqqq3=0, NPquqd1Im=0, NPquqd8Im=0, NPqqq1Im=0, NPqqq3Im=0

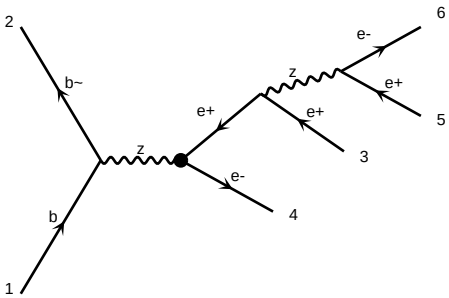

diagram 1118 NP=1, NPcG=0, NPcGtil=0, NPcH=0, NPcHB=0, NPcHDD=0, NPcHW=0, NPcHWB=0, NPcW=0, NPdcHBtil=0, NPdcHWtil=0, NPeHRe=0, NPeHWRe=0, NPlebQR1=0, NPlebQR3=0, NPlebQR8=0, NPlebRR1=0, NPlebRR8=0, NPlqR1=0, NPlqR3=0, NPlqR8=0, NPuHRe=0, NPuWRe=0, NPquqd1=0, NPquqd8=0, NPqqq1=0, NPqqq3=0, NPquqd1Im=0, NPquqd8Im=0, NPqqq1Im=0, NPqqq3Im=0

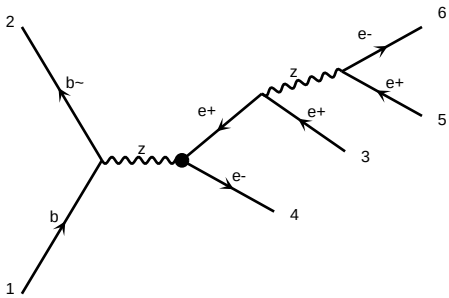

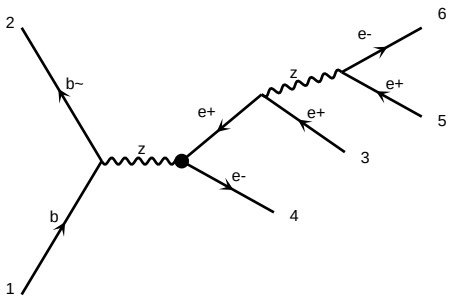

diagram 1120 NP=1, NPcG=0, NPcGtil=0, NPcH=0, NPcHB=0, NPcHDD=0, NPcHW=0, NPcHWB=0, NPcW=0, NPdcHBtil=0, NPdcHWtil=0, NPeHRe=0, NPeHWRe=0, NPlebQR1=0, NPlebQR3=0, NPlebQR8=0, NPlebRR1=0, NPlebRR8=0, NPlqR1=0, NPlqR3=0, NPlqR8=0, NPuHRe=0, NPuWRe=0, NPquqd1=0, NPquqd8=0, NPqqq1=0, NPqqq3=0, NPquqd1Im=0, NPquqd8Im=0, NPqqq1Im=0, NPqqq3Im=0

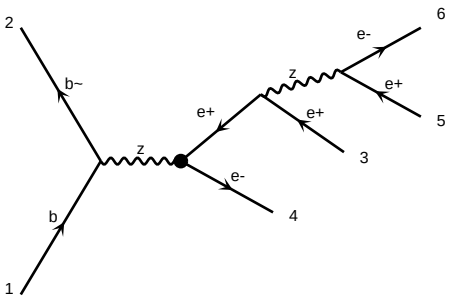

diagram 1121 NP=1, NPcG=0, NPcGtil=0, NPcH=0, NPcHB=0, NPcHDD=0, NPcHW=0, NPcHWB=0, NPcW=0, NPdcHBtil=0, NPdcHWtil=0, NPeHRe=0, NPeHWRe=0, NPlebQR1=0, NPlebQR3=0, NPlebQR8=0, NPlebRR1=0, NPlebRR8=0, NPlqR1=0, NPlqR3=0, NPlqR8=0, NPuHRe=0, NPuWRe=0, NPquqd1=0, NPquqd8=0, NPqqq1=0, NPqqq3=0, NPquqd1Im=0, NPquqd8Im=0, NPqqq1Im=0, NPqqq3Im=0

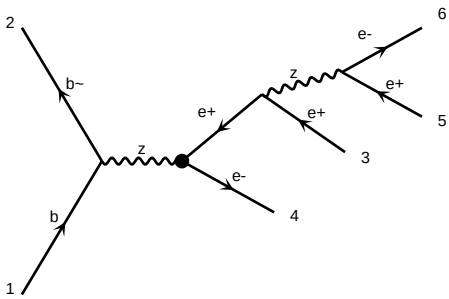

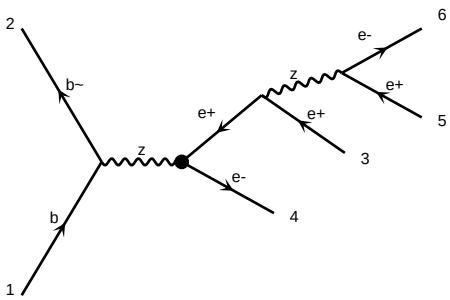

diagram 1123 NP=1, NPcG=0, NPcGtil=0, NPcH=0, NPcHB=0, NPcHDD=0, NPcHW=0, NPcHWB=0, NPcW=0, NPdcHBtil=0, NPdcHWtil=0, NPeHRe=0, NPeHWRe=0, NPlebQR1=0, NPlebQR3=0, NPlebQR8=0, NPlebRR1=0, NPlebRR8=0, NPlqR1=0, NPlqR3=0, NPlqR8=0, NPuHRe=0, NPuWRe=0, NPquqd1=0, NPquqd8=0, NPqqq1=0, NPqqq3=0, NPquqd1Im=0, NPquqd8Im=0, NPqqq1Im=0, NPqqq3Im=0

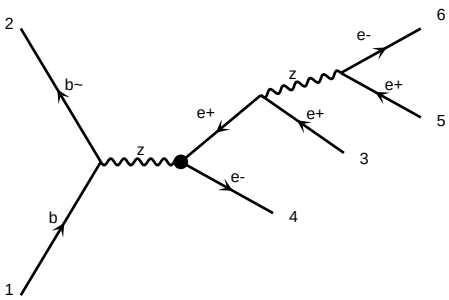

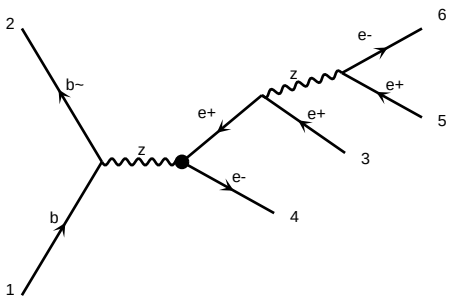

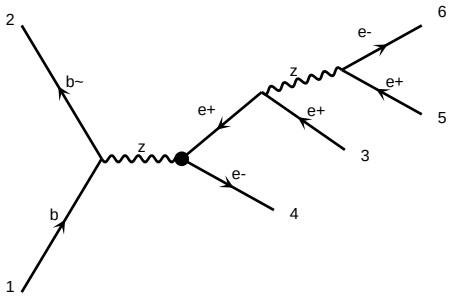

diagram 1126 NP=1, NPcG=0, NPcGtil=0, NPcH=0, NPcHB=0, NPcHDD=0, NPcHW=0, NPcHWB=0, NPcW=0, NPdcHB=0, NPdcHW=0, NPeHB=0, NPeHW=0, NPlH1=0, NPlH2=0, NPlHB=0, NPlHW=0, NPlebQ3=0, NPledq=0, NPlequ1=0, NPlequ3=0, NPqG=0, NPqH=0, NPqHB=0, NPqHW=0, NPquG=0, NPquH=0, NPuB=0, NPuH=0, NPuW=0

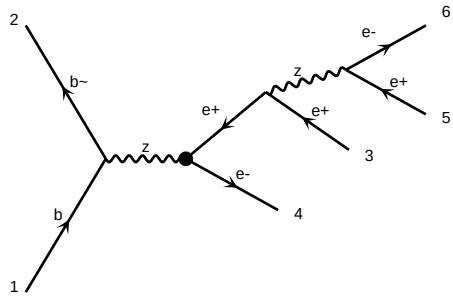

diagram 1127 NP=1, NPcG=0, NPcGtil=0, NPcH=0, NPcHB=0, NPcHDD=0, NPcHW=0, NPcHWB=0, NPcW=0, NPdcHB=0, NPdcHW=0, NPeHB=0, NPeHW=0, NPlH1=0, NPlH2=0, NPlHB=0, NPlHW=0, NPlebQ3=0, NPledq=0, NPlequ1=0, NPlequ3=0, NPqG=0, NPqH=0, NPqHB=0, NPqHW=0, NPquG=0, NPquH=0, NPuB=0, NPuH=0, NPuW=0

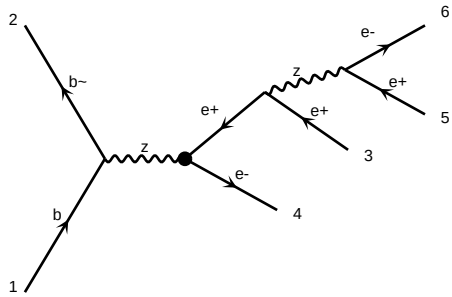

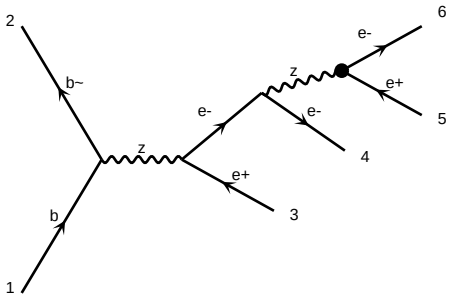

diagram 1129 NP=1, NPcG=0, NPcGtil=0, NPcH=0, NPcHB=0, NPcHDD=0, NPcHW=0, NPcHWB=0, NPcW=0, NPdcHB=0, NPdcHW=0, NPeHB=0, NPeHW=0, NPlH1=0, NPlH2=0, NPlHB=0, NPlHW=0, NPlebQ3=0, NPledq=0, NPlequ1=0, NPlequ3=0, NPqG=0, NPqH=0, NPqHB=0, NPqHW=0, NPquG=0, NPquH=0, NPuB=0, NPuH=0, NPuW=0

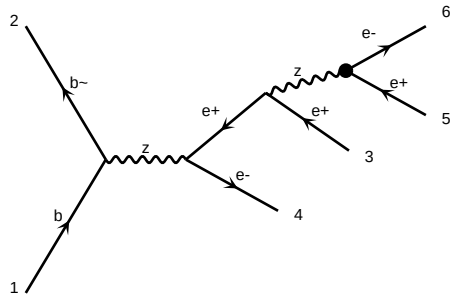

diagram 1130 NP=1, NPcG=0, NPcGtil=0, NPcH=0, NPcHB=0, NPcHDD=0, NPcHW=0, NPcHWB=0, NPcW=0, NPdcHB=0, NPdcHW=0, NPeHB=0, NPeHW=0, NPlH1=0, NPlH2=0, NPlHB=0, NPlHW=0, NPlebQ3=0, NPledq=0, NPlequ1=0, NPlequ3=0, NPqG=0, NPqH=0, NPqHB=0, NPqHW=0, NPquG=0, NPquH=0, NPuB=0, NPuH=0, NPuW=0

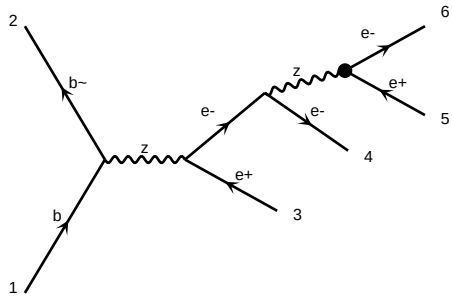

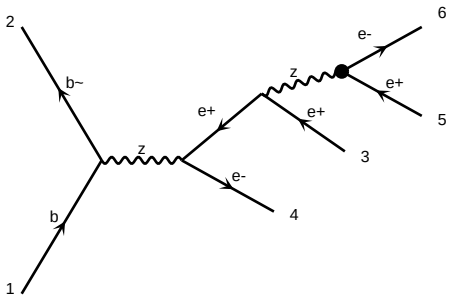

diagram 1132 NP=1, NPcG=0, NPcGtil=0, NPcH=0, NPcHB=0, NPcHDD=0, NPcHW=0, NPcHWB=0, NPcW=0, NPdcHB=0, NPdcHW=0, NPeHB=0, NPeHW=0, NPlH1=0, NPlH2=0, NPlHB=0, NPlHW=0, NPlebQ3=0, NPledq=0, NPlequ1=0, NPlequ3=0, NPqG=0, NPqH=0, NPqHB=0, NPqHW=0, NPquG=0, NPquH=0, NPuB=0, NPuH=0, NPuW=0

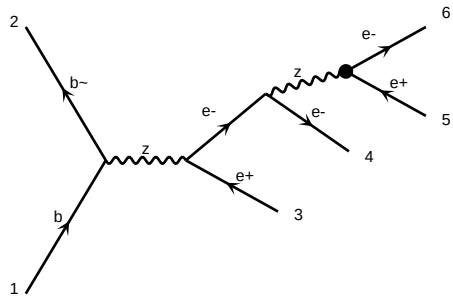

diagram 1133 NP=1, NPcG=0, NPcGtil=0, NPcH=0, NPcHB=0, NPcHDD=0, NPcHW=0, NPcHWB=0, NPcW=0, NPdcHB=0, NPdcHW=0, NPeHB=0, NPeHW=0, NPlH1=0, NPlH2=0, NPlHB=0, NPlHW=0, NPlebQ3=0, NPledq=0, NPlequ1=0, NPlequ3=0, NPqG=0, NPqH=0, NPqHB=0, NPqHW=0, NPquG=0, NPquH=0, NPuB=0, NPuH=0, NPuW=0

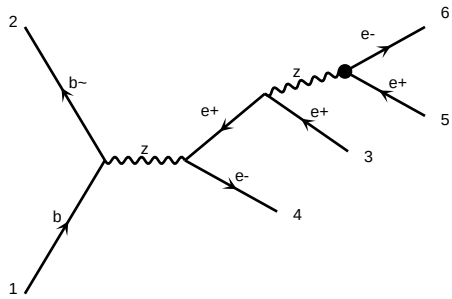

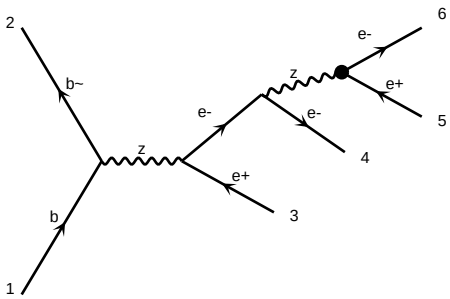

diagram 1135 NP=1, NPcG=0, NPcGtil=0, NPcH=0, NPcHB=0, NPcHDD=0, NPcHW=0, NPcHWB=0, NPcW=0, NPdcHB=0, NPdcHW=0, NPeHB=0, NPeHW=0, NPlH1=0, NPlH2=0, NPlHB=0, NPlHW=0, NPlebQ3=0, NPledq=0, NPlequ1=0, NPlequ3=0, NPqG=0, NPqH=0, NPqHB=0, NPqHW=0, NPquG=0, NPquH=0, NPuB=0, NPuH=0, NPuW=0

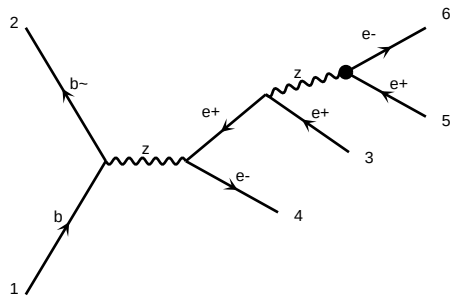

diagram 1136 NP=1, NPcG=0, NPcGtil=0, NPcH=0, NPcHB=0, NPcHDD=0, NPcHW=0, NPcHWB=0, NPcW=0, NPdcHB=0, NPdcHW=0, NPeHB=0, NPeHW=0, NPlH1=0, NPlH2=0, NPlHB=0, NPlHW=0, NPlebQ3=0, NPledq=0, NPlequ1=0, NPlequ3=0, NPqG=0, NPqH=0, NPqHB=0, NPqHW=0, NPquG=0, NPquH=0, NPuB=0, NPuH=0, NPuW=0

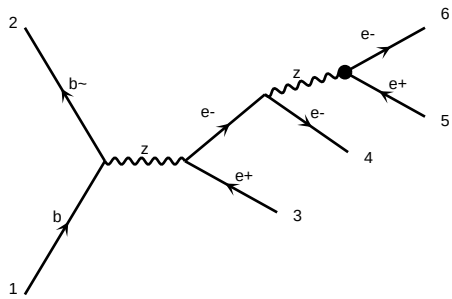

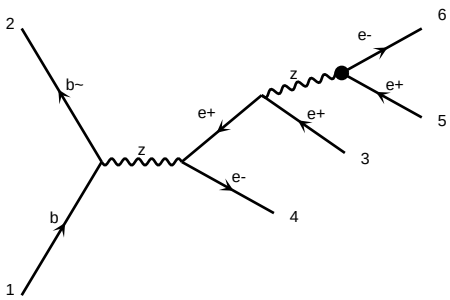

diagram 1138 NP=1, NPcG=0, NPcGtil=0, NPcH=0, NPcHB=0, NPcHDD=0, NPcHW=0, NPcHWB=0, NPcW=0, NPdcHB=0, NPdcHW=0, NPeHB=0, NPeHW=0, NPlH1=0, NPlH2=0, NPlHB=0, NPlHW=0, NPlebQ3=0, NPledq=0, NPlequ1=0, NPlequ3=0, NPqG=0, NPqH=0, NPqHB=0, NPqHW=0, NPquG=0, NPquH=0, NPuB=0, NPuH=0, NPuW=0

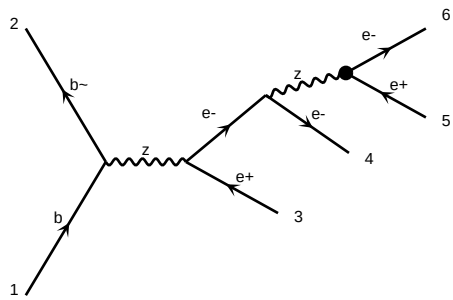

diagram 1139 NP=1, NPcG=0, NPcGtil=0, NPcH=0, NPcHB=0, NPcHDD=0, NPcHW=0, NPcHWB=0, NPcW=0, NPdcHB=0, NPdcHW=0, NPeHB=0, NPeHW=0, NPlH1=0, NPlH2=0, NPlHB=0, NPlHW=0, NPlebQ3=0, NPledq=0, NPlequ1=0, NPlequ3=0, NPqG=0, NPqH=0, NPqHB=0, NPqHW=0, NPquG=0, NPquH=0, NPuB=0, NPuH=0, NPuW=0

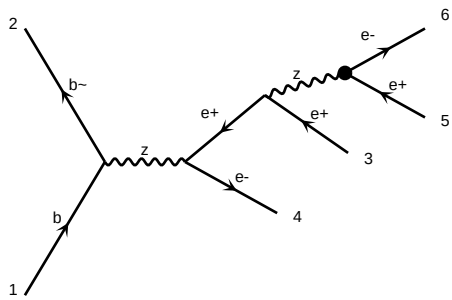

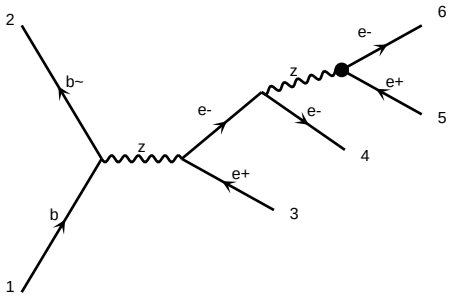

diagram 1141 NP=1, NPcG=0, NPcGtil=0, NPcH=0, NPcHB=0, NPcHDD=0, NPcHW=0, NPcHWB=0, NPcW=0, NPdcHBtil=0, NPdcHWtil=0, NPeHRe=0, NPeHWRe=0, NPlHRe=0, NPlHWRe=0, NPuHRe=0, NPuHWRe=0

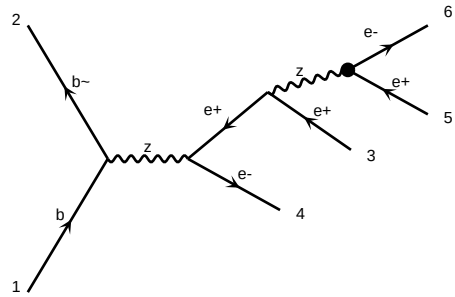

diagram 1142 NP=1, NPcG=0, NPcGtil=0, NPcH=0, NPcHB=0, NPcHDD=0, NPcHW=0, NPcHWB=0, NPcW=0, NPdcHBtil=0, NPdcHWtil=0, NPeHRe=0, NPeHWRe=0, NPlHRe=0, NPlHWRe=0, NPuHRe=0, NPuHWRe=0

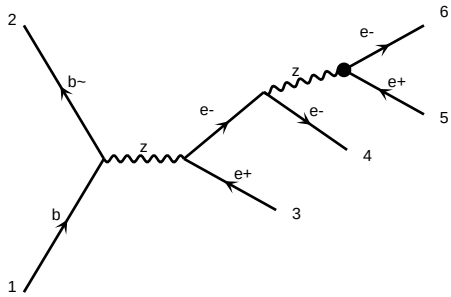

diagram 1143 NP=1, NPcG=0, NPcGtil=0, NPcH=0, NPcHB=0, NPcHDD=0, NPcHW=0, NPcHWB=0, NPcW=0, NPdcHBtil=0, NPdcHWtil=0, NPeHRe=0, NPeHWRe=0, NPlHRe=0, NPlHWRe=0, NPuHRe=0, NPuHWRe=0

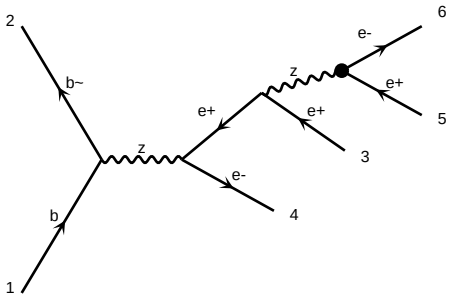

diagram 1144 NP=1, NPcG=0, NPcGtil=0, NPcH=0, NPcHB=0, NPcHDD=0, NPcHW=0, NPcHWB=0, NPcW=0, NPdcHBtil=0, NPdcHWtil=0, NPeHRe=0, NPeHWRe=0, NPlHRe=0, NPlHWRe=0, NPuHRe=0, NPuHWRe=0

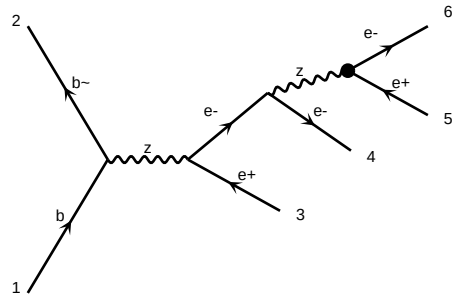

diagram 1145 NP=1, NPcG=0, NPcGtil=0, NPcH=0, NPcHB=0, NPcHDD=0, NPcHW=0, NPcHWB=0, NPcW=0, NPdcHBtil=0, NPdcHWtil=0, NPeHRe=0, NPeHWRe=0, NPlHRe=0, NPlHWRe=0, NPuHRe=0, NPuHWRe=0

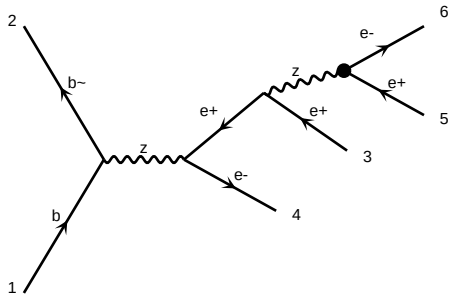

diagram 1146 NP=1, NPcG=0, NPcGtil=0, NPcH=0, NPcHB=0, NPcHDD=0, NPcHW=0, NPcHWB=0, NPcW=0, NPdcHBtil=0, NPdcHWtil=0, NPeHRe=0, NPeHWRe=0, NPlHRe=0, NPlHWRe=0, NPuHRe=0, NPuHWRe=0

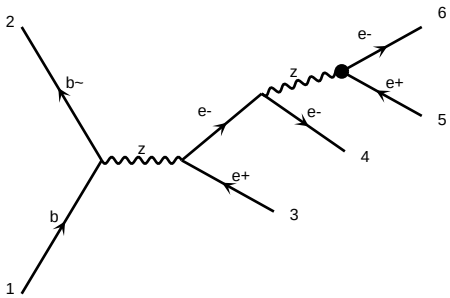

diagram 1147 NP=1, NPcG=0, NPcGtil=0, NPcH=0, NPcHB=0, NPcHDD=0, NPcHW=0, NPcHWB=0, NPcW=0, NPdcHBtil=0, NPdcHWtil=0, NPeHRe=0, NPeHWRe=0, NPlHRe=0, NPlHWRe=0, NPuHRe=0, NPuHWRe=0

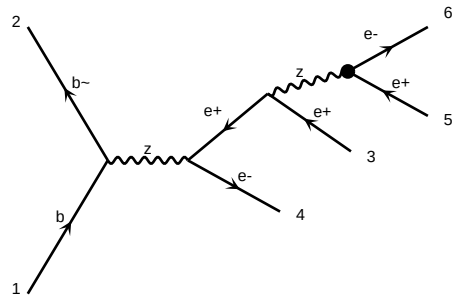

diagram 1148 NP=1, NPcG=0, NPcGtil=0, NPcH=0, NPcHB=0, NPcHDD=0, NPcHW=0, NPcHWB=0, NPcW=0, NPdcHBtil=0, NPdcHWtil=0, NPeHRe=0, NPeHWRe=0, NPlHRe=0, NPlHWRe=0, NPuHRe=0, NPuHWRe=0

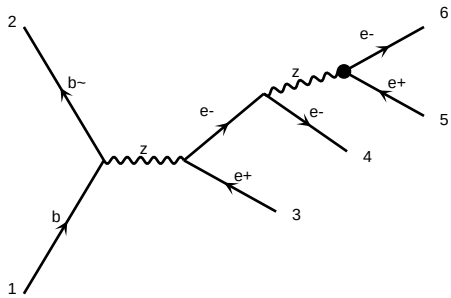

diagram 1149 NP=1, NPcG=0, NPcGtil=0, NPcH=0, NPcHB=0, NPcHDD=0, NPcHW=0, NPcHWB=0, NPcW=0, NPdcHBtil=0, NPdcHWtil=0, NPeHRe=0, NPeHWRe=0, NPlHRe=0, NPlHWRe=0, NPuHRe=0, NPuHWRe=0

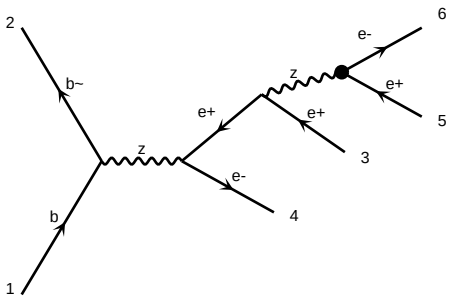

diagram 1150 NP=1, NPcG=0, NPcGtil=0, NPcH=0, NPcHB=0, NPcHDD=0, NPcHW=0, NPcHWB=0, NPcW=0, NPdcHBtil=0, NPdcHWtil=0, NPeHRe=0, NPeHWRe=0, NPlHRe=0, NPlHWRe=0, NPuHRe=0, NPuHWRe=0

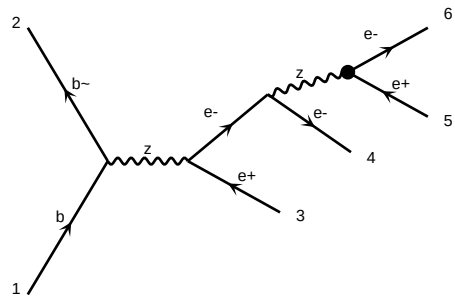

diagram 1151 NP=1, NPcG=0, NPcGtil=0, NPcH=0, NPcHB=0, NPcHDD=0, NPcHW=0, NPcHWB=0, NPcW=0, NPdcHBtil=0, NPdcHWtil=0, NPeHRe=0, NPeHWRe=0, NPlHRe=0, NPlHWRe=0, NPuHRe=0, NPuHWRe=0

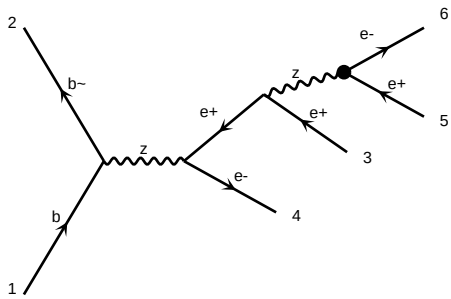

diagram 1152 NP=1, NPcG=0, NPcGtil=0, NPcH=0, NPcHB=0, NPcHDD=0, NPcHW=0, NPcHWB=0, NPcW=0, NPdcHBtil=0, NPdcHWtil=0, NPeHRe=0, NPeHWRe=0, NPlHRe=0, NPlHWRe=0, NPuHRe=0, NPuHWRe=0

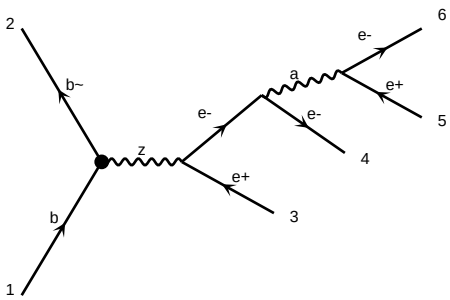

diagram 1153 NP=1, NPcG=0, NPcGtil=0, NPcH=0, NPcHB=0, NPcHDD=0, NPcHW=0, NPcHWB=0, NPcW=0, NPdcHBtil=0, NPdcHWtil=0, NPeHRe=0, NPeHWRe=0, NPlHRe=0, NPlHWRe=0, NPuHRe=0, NPuHWRe=0

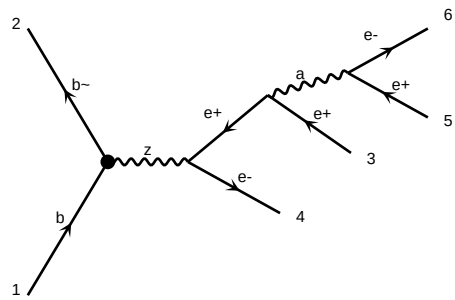

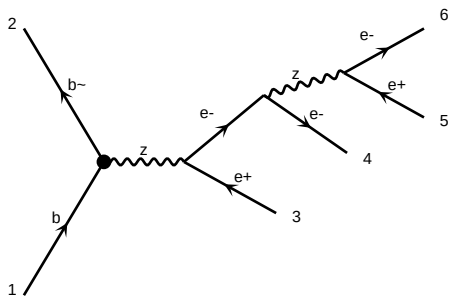

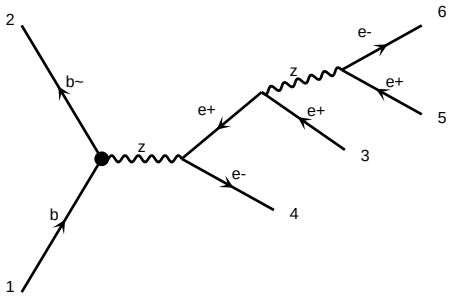

diagram 1156 NP=1, NPcG=0, NPcGtil=0, NPcH=0, NPcHB=0, NPcHDD=0, NPcHW=0, NPcHWB=0, NPcW=0, NPcWtil=0, NPdeltaB=0, NPdeltaW=0, NPeHB=0, NPeHW=0, NPeW=0, NPlHB=0, NPlHW=0, NPlW=0, NPqHB=0, NPqHW=0, NPqW=0, NPuHB=0, NPuHW=0, NPuW=0

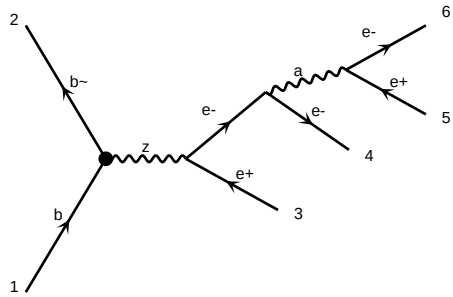

diagram 1157 NP=1, NPcG=0, NPcGtil=0, NPcH=0, NPcHB=0, NPcHDD=0, NPcHW=0, NPcHWB=0, NPcW=0, NPcWtil=0, NPdeltaB=0, NPdeltaW=0, NPeHB=0, NPeHW=0, NPeW=0, NPlHB=0, NPlHW=0, NPlW=0, NPqHB=0, NPqHW=0, NPqW=0, NPuHB=0, NPuHW=0, NPuW=0

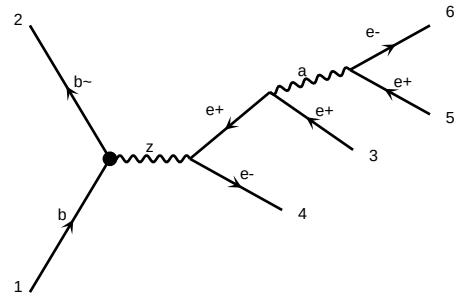

diagram 1158 NP=1, NPcG=0, NPcGtil=0, NPcH=0, NPcHB=0, NPcHDD=0, NPcHW=0, NPcHWB=0, NPcW=0, NPcWtil=0, NPdeltaB=0, NPdeltaW=0, NPeHB=0, NPeHW=0, NPeW=0, NPlHB=0, NPlHW=0, NPlW=0, NPqHB=0, NPqHW=0, NPqW=0, NPuHB=0, NPuHW=0, NPuW=0

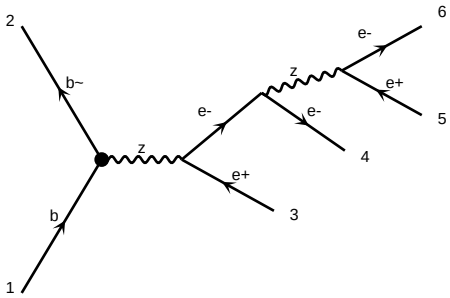

diagram 1159 NP=1, NPcG=0, NPcGtil=0, NPcH=0, NPcHB=0, NPcHDD=0, NPcHW=0, NPcHWB=0, NPcW=0, NPcWtil=0, NPdeltaB=0, NPdeltaW=0, NPeHB=0, NPeHW=0, NPeW=0, NPlHB=0, NPlHW=0, NPlW=0, NPqHB=0, NPqHW=0, NPqW=0, NPuHB=0, NPuHW=0, NPuW=0

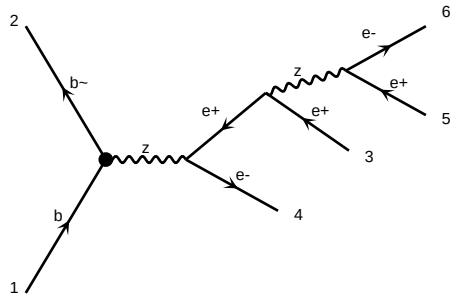

diagram 1160 NP=1, NPcG=0, NPcGtil=0, NPcH=0, NPcHB=0, NPcHDD=0, NPcHW=0, NPcHWB=0, NPcW=0, NPcWtil=0, NPdeltaB=0, NPdeltaW=0, NPeHB=0, NPeHW=0, NPeW=0, NPlHB=0, NPlHW=0, NPlW=0, NPqHB=0, NPqHW=0, NPqW=0, NPuHB=0, NPuHW=0, NPuW=0

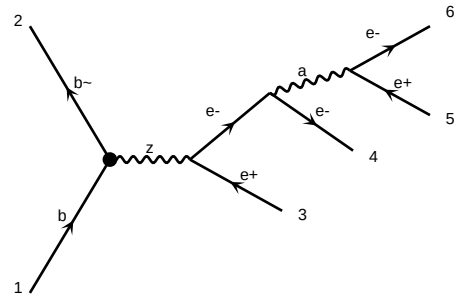

diagram 1161 NP=1, NPcG=0, NPcGtil=0, NPcH=0, NPcHB=0, NPcHDD=0, NPcHW=0, NPcHWB=0, NPcW=0, NPcWtil=0, NPdeltaB=0, NPdeltaW=0, NPeHB=0, NPeHW=0, NPeW=0, NPlHB=0, NPlHW=0, NPlW=0, NPqHB=0, NPqHW=0, NPqW=0, NPuHB=0, NPuHW=0, NPuW=0

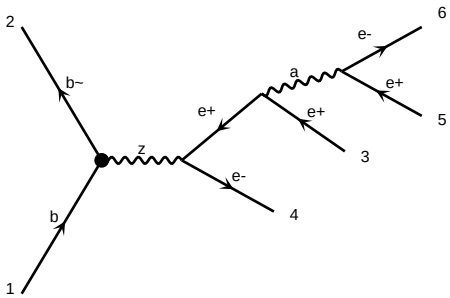

diagram 1162 NP=1, NPcG=0, NPcGtil=0, NPcH=0, NPcHB=0, NPcHDD=0, NPcHW=0, NPcHWB=0, NPcW=0, NPcWtil=0, NPdeltaB=0, NPdeltaW=0, NPeHB=0, NPeHW=0, NPeW=0, NPlHB=0, NPlHW=0, NPlW=0, NPqHB=0, NPqHW=0, NPqW=0, NPuHB=0, NPuHW=0, NPuW=0

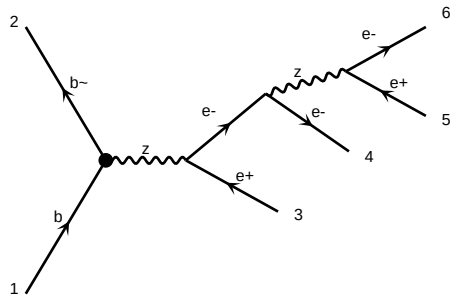

diagram 1163 NP=1, NPcG=0, NPcGtil=0, NPcH=0, NPcHB=0, NPcHDD=0, NPcHW=0, NPcHWB=0, NPcW=0, NPcWtil=0, NPdeltaB=0, NPdeltaW=0, NPeHB=0, NPeHW=0, NPeW=0, NPlHB=0, NPlHW=0, NPlW=0, NPqHB=0, NPqHW=0, NPqW=0, NPuHB=0, NPuHW=0, NPuW=0

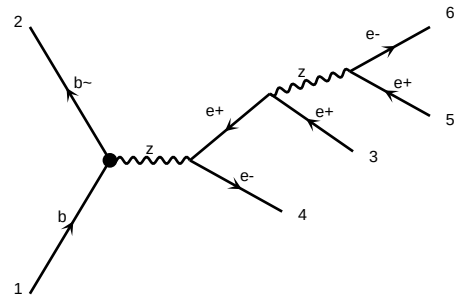

diagram 1164 NP=1, NPcG=0, NPcGtil=0, NPcH=0, NPcHB=0, NPcHDD=0, NPcHW=0, NPcHWB=0, NPcW=0, NPcWtil=0, NPdeltaB=0, NPdeltaW=0, NPeHB=0, NPeHW=0, NPeW=0, NPlHB=0, NPlHW=0, NPlW=0, NPqHB=0, NPqHW=0, NPqW=0, NPuHB=0, NPuHW=0, NPuW=0

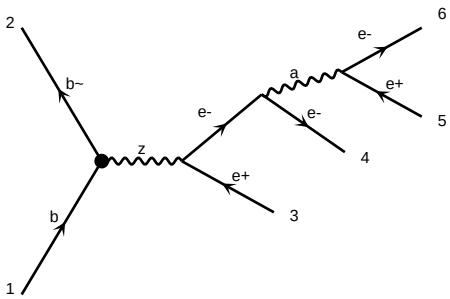

diagram 1165 NP=1, NPcG=0, NPcGtil=0, NPcH=0, NPcHB=0, NPcHDD=0, NPcHW=0, NPcHWB=0, NPcW=0, NPcWtil=0, NPdeltaB=0, NPdeltaW=0, NPeHB=0, NPeHW=0, NPeW=0, NPlHB=0, NPlHW=0, NPlW=0, NPqHB=0, NPqHW=0, NPqW=0, NPuHB=0, NPuHW=0, NPuW=0

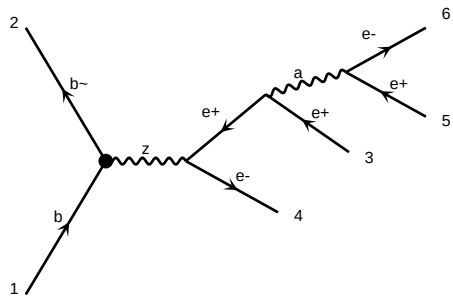

diagram 1166 NP=1, NPcG=0, NPcGtil=0, NPcH=0, NPcHB=0, NPcHDD=0, NPcHW=0, NPcHWB=0, NPcW=0, NPcWtil=0, NPdeltaB=0, NPdeltaW=0, NPeHB=0, NPeHW=0, NPeW=0, NPlHB=0, NPlHW=0, NPlW=0, NPqHB=0, NPqHW=0, NPqW=0, NPuHB=0, NPuHW=0, NPuW=0

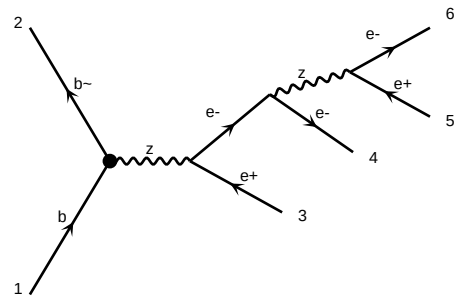

diagram 1167 NP=1, NPcG=0, NPcGtil=0, NPcH=0, NPcHB=0, NPcHDD=0, NPcHW=0, NPcHWB=0, NPcW=0, NPcWtil=0, NPdeltaB=0, NPdeltaW=0, NPeHB=0, NPeHW=0, NPeW=0, NPlHB=0, NPlHW=0, NPlW=0, NPqHB=0, NPqHW=0, NPqW=0, NPuHB=0, NPuHW=0, NPuW=0

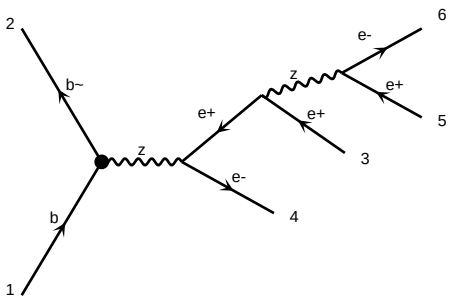

diagram 1168 NP=1, NPcG=0, NPcGtil=0, NPcH=0, NPcHB=0, NPcHDD=0, NPcHW=0, NPcHWB=0, NPcW=0, NPcWtil=0, NPdeltaB=0, NPdeltaW=0, NPeHB=0, NPeHW=0, NPeW=0, NPlHB=0, NPlHW=0, NPlW=0, NPqHB=0, NPqHW=0, NPqW=0, NPuHB=0, NPuHW=0, NPuW=0

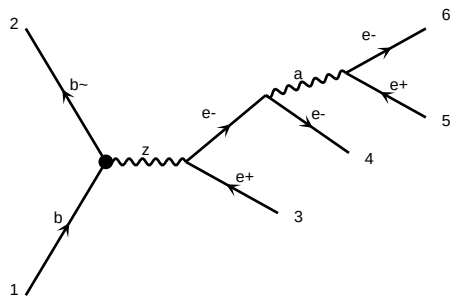

diagram 1169 NP=1, NPcG=0, NPcGtil=0, NPcH=0, NPcHB=0, NPcHDD=0, NPcHW=0, NPcHWB=0, NPcW=0, NPcWtil=0, NPdeltaB=0, NPdeltaW=0, NPeHB=0, NPeHW=0, NPeW=0, NPlHB=0, NPlHW=0, NPlW=0, NPqHB=0, NPqHW=0, NPqW=0, NPuHB=0, NPuHW=0, NPuW=0

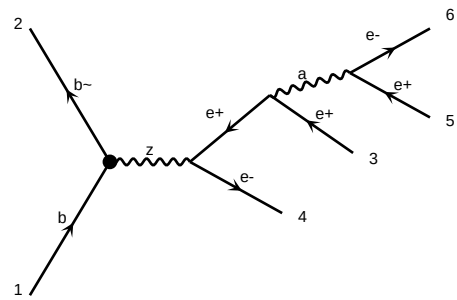

diagram 1170 NP=1, NPcG=0, NPcGtil=0, NPcH=0, NPcHB=0, NPcHDD=0, NPcHW=0, NPcHWB=0, NPcW=0, NPcWtil=0, NPdeltaB=0, NPdeltaW=0, NPeHB=0, NPeHW=0, NPeW=0, NPlHB=0, NPlHW=0, NPlW=0, NPqHB=0, NPqHW=0, NPqW=0, NPuHB=0, NPuHW=0, NPuW=0

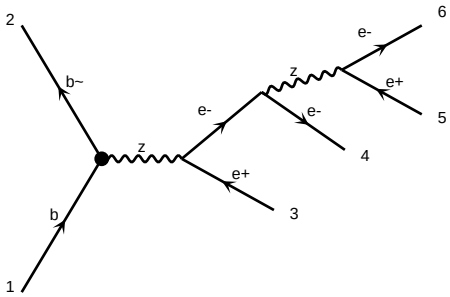

diagram 1171 NP=1, NPcG=0, NPcGtil=0, NPcH=0, NPcHB=0, NPcHDD=0, NPcHW=0, NPcHWB=0, NPcW=0, NPeHB=0, NPeW=0, NPlebQ=0, NPlebQ3=0, NPlebQtil=0, NPleHQ3=0, NPleHQtil=0, NPleLQ1=0, NPleLQ3=0, NPlelQ1=0, NPlelQ3=0, NPlelQtil=0, NPleQe=0, NPleQt1=0, NPleQt3=0, NPlqe=0, NPlqt1=0, NPlqt3=0, NPqeHQ3=0, NPqeHQtil=0, NPqeLQ1=0, NPqeLQ3=0, NPqlQ1=0, NPqlQ3=0, NPqlQtil=0, NPqQe=0, NPqQt1=0, NPqQt3=0, NPqt1HQ3=0, NPqt1HQtil=0, NPqt1LQ1=0, NPqt1LQ3=0, NPqtQe=0, NPqtQt1=0, NPqtQt3=0, NPtHQ3=0, NPtHQtil=0, NPtLQ1=0, NPtLQ3=0, NPtQe=0, NPtQt1=0, NPtQt3=0, NPuHQ3=0, NPuHQtil=0, NPuLQ1=0, NPuLQ3=0, NPuQe=0, NPuQt1=0, NPuQt3=0, NPHQ3=0, NPHQtil=0, NPLQ1=0, NPLQ3=0, NPQe=0, NPQt1=0, NPQt3=0, NPuH=0, NPuW=0, NPHQ=0, NPHu=0, NPLe=0, NPLl=0, NPLl1=0, NPLu=0, NPQQ1=0, NPQQ8=0, NPQt8=0, NPte=0, NPtt=0, NPtt1=0, NPtu=0, NPuu=0, NPuu1=0, NPee=0, NPeu=0, NPll=0, NPll1=0, NPlu=0, NPQQ=0, NPQQ1=0, NPQQ8=0, NPQt=0, NPQt1

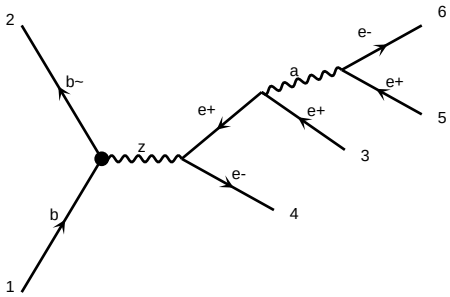

diagram 1186 NP=1, NPcG=0, NPcGtil=0, NPcH=0, NPcHB=0, NPcHDD=0, NPcHW=0, NPcHWB=0, NPcW=0, NPdcHB=0, NPdcHW=0, NPeHB=0, NPeW=0, NPlH1=0, NPlH2=0, NPlHB=0, NPlHW=0, NPlebH=0, NPlebHB=0, NPlebW=0, NPledjQ=0, NPlelq=0, NPqH=0, NPqHB=0, NPqHW=0, NPquH=0, NPquqd1=0, NPquqd8=0, NPqujQ=0, NPqW=0

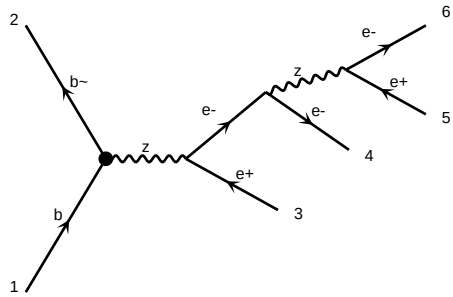

diagram 1187 NP=1, NPcG=0, NPcGtil=0, NPcH=0, NPcHB=0, NPcHDD=0, NPcHW=0, NPcHWB=0, NPcW=0, NPdcHB=0, NPdcHW=0, NPeHB=0, NPeW=0, NPlH1=0, NPlH2=0, NPlHB=0, NPlHW=0, NPlebH=0, NPlebHB=0, NPlebW=0, NPledjQ=0, NPlelq=0, NPqH=0, NPqHB=0, NPqHW=0, NPquH=0, NPquqd1=0, NPquqd8=0, NPqujQ=0, NPqW=0

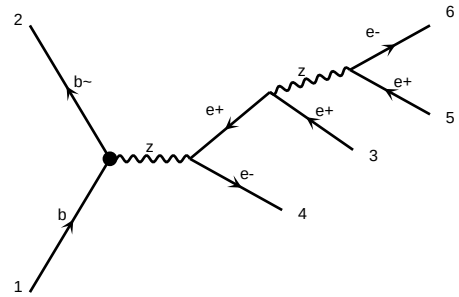

diagram 1188 NP=1, NPcG=0, NPcGtil=0, NPcH=0, NPcHB=0, NPcHDD=0, NPcHW=0, NPcHWB=0, NPcW=0, NPdcHB=0, NPdcHW=0, NPeHB=0, NPeW=0, NPlH1=0, NPlH2=0, NPlHB=0, NPlHW=0, NPlebH=0, NPlebHB=0, NPlebW=0, NPledjQ=0, NPlelq=0, NPqH=0, NPqHB=0, NPqHW=0, NPquH=0, NPquqd1=0, NPquqd8=0, NPqujQ=0, NPqW=0

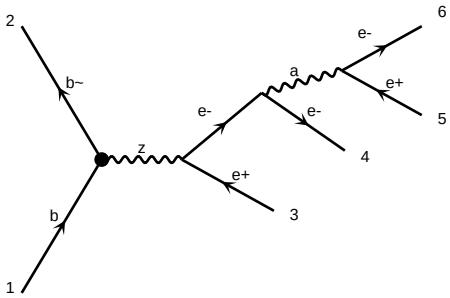

diagram 1189 NP=1, NPcG=0, NPcGtil=0, NPcH=0, NPcHB=0, NPcHDD=0, NPcHW=0, NPcHWB=0, NPcW=0, NPdcHB=0, NPdcHW=0, NPeHB=0, NPeW=0, NPlH1=0, NPlH2=0, NPlHB=0, NPlHW=0, NPlebH=0, NPlebHB=0, NPlebW=0, NPledjQ=0, NPlelq=0, NPqH=0, NPqHB=0, NPqHW=0, NPquH=0, NPquqd1=0, NPquqd8=0, NPqujQ=0, NPqW=0

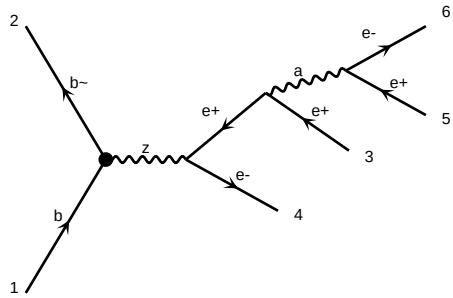

diagram 1190 NP=1, NPcG=0, NPcGtil=0, NPcH=0, NPcHB=0, NPcHDD=0, NPcHW=0, NPcHWB=0, NPcW=0, NPdcHB=0, NPdcHW=0, NPeHB=0, NPeW=0, NPlH1=0, NPlH2=0, NPlHB=0, NPlHW=0, NPlebH=0, NPlebHB=0, NPlebW=0, NPledjQ=0, NPlelq=0, NPqH=0, NPqHB=0, NPqHW=0, NPquH=0, NPquqd1=0, NPquqd8=0, NPqujQ=0, NPqW=0

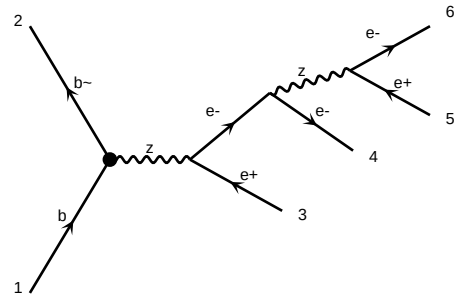

diagram 1191 NP=1, NPcG=0, NPcGtil=0, NPcH=0, NPcHB=0, NPcHDD=0, NPcHW=0, NPcHWB=0, NPcW=0, NPdcHB=0, NPdcHW=0, NPeHB=0, NPeW=0, NPlH1=0, NPlH2=0, NPlHB=0, NPlHW=0, NPlebH=0, NPlebHB=0, NPlebW=0, NPledjQ=0, NPlelq=0, NPqH=0, NPqHB=0, NPqHW=0, NPquH=0, NPquqd1=0, NPquqd8=0, NPqujQ=0, NPqW=0

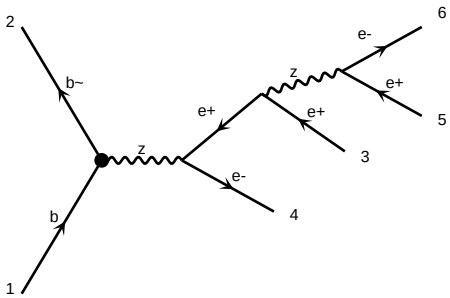

diagram 1192 NP=1, NPcG=0, NPcGtil=0, NPcH=0, NPcHB=0, NPcHDD=0, NPcHW=0, NPcHWB=0, NPcW=0, NPdcHB=0, NPdcHW=0, NPeHB=0, NPeW=0, NPlH1=0, NPlH2=0, NPlHB=0, NPlHW=0, NPlebH=0, NPlebHB=0, NPlebW=0, NPledjQ=0, NPlelq=0, NPqH=0, NPqHB=0, NPqHW=0, NPquH=0, NPquqd1=0, NPquqd8=0, NPqujQ=0, NPqW=0

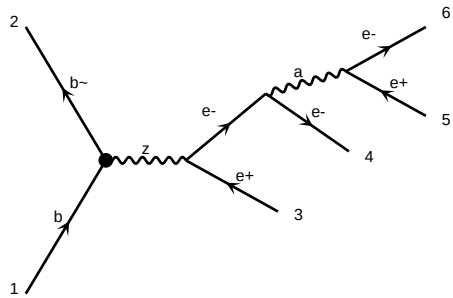

diagram 1193 NP=1, NPcG=0, NPcGtil=0, NPcH=0, NPcHB=0, NPcHDD=0, NPcHW=0, NPcHWB=0, NPcW=0, NPdcHB=0, NPdcHW=0, NPeHB=0, NPeW=0, NPlH1=0, NPlH2=0, NPlHB=0, NPlHW=0, NPlebH=0, NPlebHB=0, NPlebW=0, NPledjQ=0, NPlelq=0, NPqH=0, NPqHB=0, NPqHW=0, NPquH=0, NPquqd1=0, NPquqd8=0, NPqujQ=0, NPqW=0

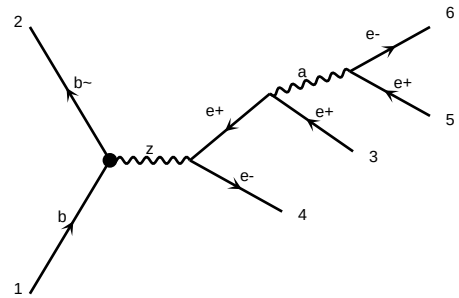

diagram 1194 NP=1, NPcG=0, NPcGtil=0, NPcH=0, NPcHB=0, NPcHDD=0, NPcHW=0, NPcHWB=0, NPcW=0, NPdcHB=0, NPdcHW=0, NPeHB=0, NPeW=0, NPlH1=0, NPlH2=0, NPlHB=0, NPlHW=0, NPlebH=0, NPlebHB=0, NPlebW=0, NPledjQ=0, NPlelq=0, NPqH=0, NPqHB=0, NPqHW=0, NPquH=0, NPquqd1=0, NPquqd8=0, NPqujQ=0, NPqW=0

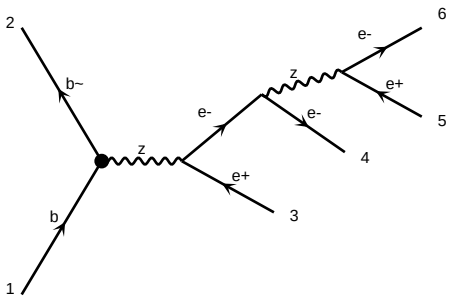

diagram 1195 NP=1, NPcG=0, NPcGtil=0, NPcH=0, NPcHB=0, NPcHDD=0, NPcHW=0, NPcHWB=0, NPcW=0, NPdcHB=0, NPdcHW=0, NPeHB=0, NPeW=0, NPlH1=0, NPlH2=0, NPlHB=0, NPlHW=0, NPlebH=0, NPlebHB=0, NPlebW=0, NPledjQ=0, NPlelq=0, NPqH=0, NPqHB=0, NPqHW=0, NPquH=0, NPquqd1=0, NPquqd8=0, NPqujQ=0, NPqW=0

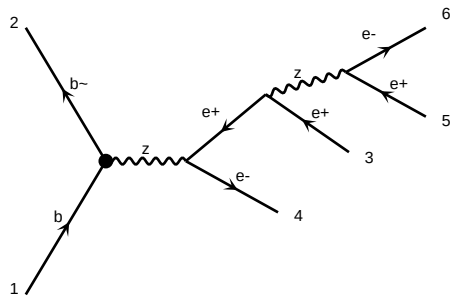

diagram 1196 NP=1, NPcG=0, NPcGtil=0, NPcH=0, NPcHB=0, NPcHDD=0, NPcHW=0, NPcHWB=0, NPcW=0, NPdcHB=0, NPdcHW=0, NPeHB=0, NPeW=0, NPlH1=0, NPlH2=0, NPlHB=0, NPlHW=0, NPlebH=0, NPlebHB=0, NPlebW=0, NPledjQ=0, NPlelq=0, NPqH=0, NPqHB=0, NPqHW=0, NPquH=0, NPquqd1=0, NPquqd8=0, NPqujQ=0, NPqW=0

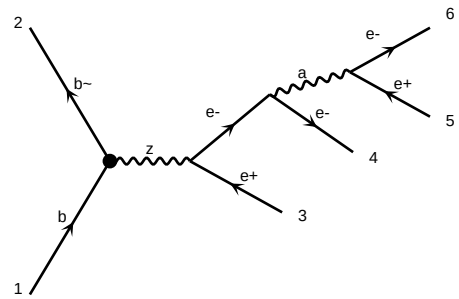

diagram 1197 NP=1, NPcG=0, NPcGtil=0, NPcH=0, NPcHB=0, NPcHDD=0, NPcHW=0, NPcHWB=0, NPcW=0, NPdcHB=0, NPdcHW=0, NPeHB=0, NPeW=0, NPlH1=0, NPlH2=0, NPlHB=0, NPlHW=0, NPlebH=0, NPlebHB=0, NPlebW=0, NPledjQ=0, NPlelq=0, NPqH=0, NPqHB=0, NPqHW=0, NPquH=0, NPquqd1=0, NPquqd8=0, NPqujQ=0, NPqW=0

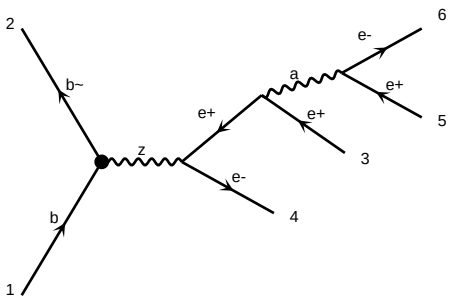

diagram 1198 NP=1, NPcG=0, NPcGtil=0, NPcH=0, NPcHB=0, NPcHDD=0, NPcHW=0, NPcHWB=0, NPcW=0, NPdcHB=0, NPdcHW=0, NPeHB=0, NPeW=0, NPlH1=0, NPlH2=0, NPlHB=0, NPlHW=0, NPlebH=0, NPlebHB=0, NPlebW=0, NPledjQ=0, NPlelq=0, NPqH=0, NPqHB=0, NPqHW=0, NPquH=0, NPquqd1=0, NPquqd8=0, NPqujQ=0, NPqW=0

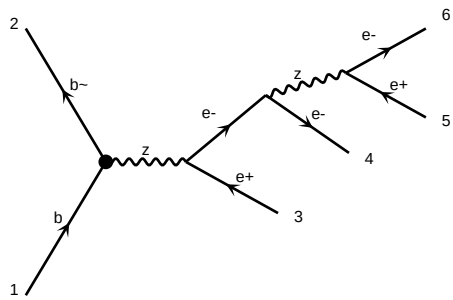

diagram 1199 NP=1, NPcG=0, NPcGtil=0, NPcH=0, NPcHB=0, NPcHDD=0, NPcHW=0, NPcHWB=0, NPcW=0, NPdcHB=0, NPdcHW=0, NPeHB=0, NPeW=0, NPlH1=0, NPlH2=0, NPlHB=0, NPlHW=0, NPlebH=0, NPlebHB=0, NPlebW=0, NPledjQ=0, NPlelq=0, NPqH=0, NPqHB=0, NPqHW=0, NPquH=0, NPquqd1=0, NPquqd8=0, NPqujQ=0, NPqW=0

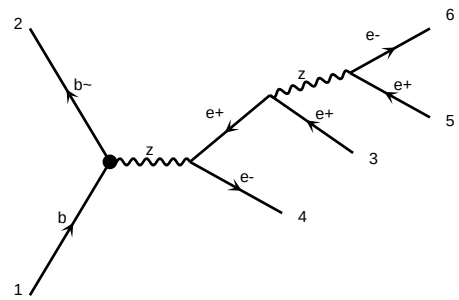

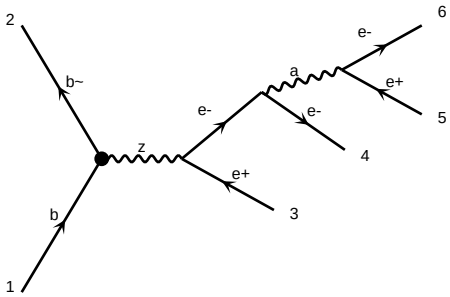

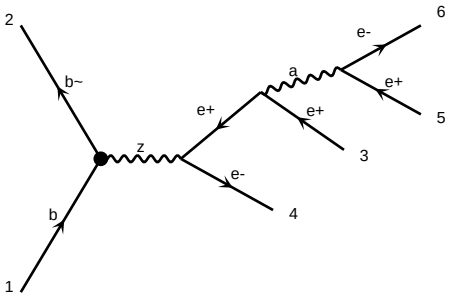

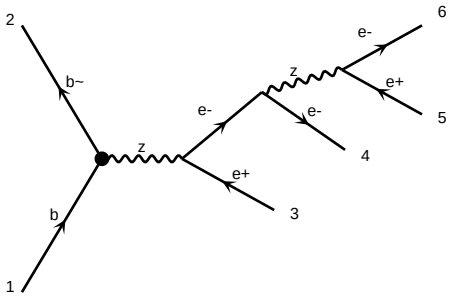

diagram 1201 NP=1, NPcG=0, NPcGtil=0, NPcH=0, NPcHB=0, NPcHDD=0, NPcHW=0, NPcHWB=0, NPcW=0, NPdcHB=0, NPdcHW=0, NPeHB=0, NPeHW=0, NPlH1=0, NPlH2=0, NPlHB=0, NPlHW=0, NPlebH=0, NPlebHB=0, NPlebHW=0, NPlebW=0, NPlequ1H=0, NPlequ3H=0, NPlequ3HW=0, NPlequ3W=0, NPqH=0, NPqHB=0, NPqHW=0, NPquH=0, NPquHB=0, NPquHW=0, NPquW=0, NPqujH=0, NPqujHB=0, NPqujHW=0, NPqujW=0, NPuH=0, NPuHB=0, NPuHW=0, NPuW=0, NPuebH=0, NPuebHB=0, NPuebHW=0, NPuebW=0, NPuqdH=0, NPuqdHB=0, NPuqdHW=0, NPuqdW=0, NPuuH=0, NPuuHB=0, NPuuHW=0, NPuuW=0, NPW=0, NPWtil=0

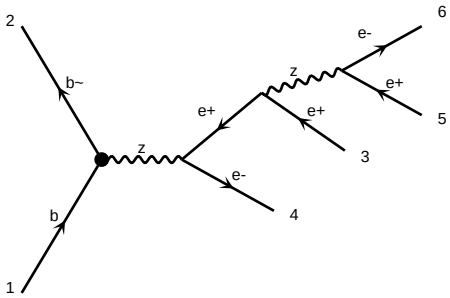

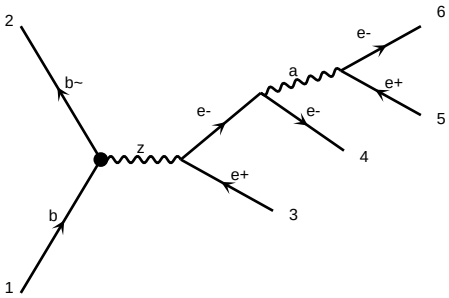

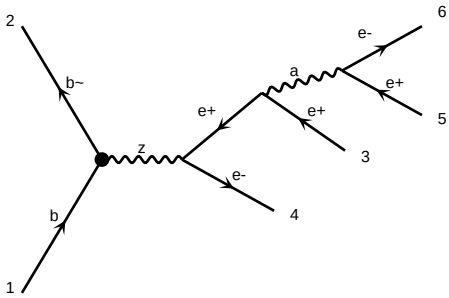

diagram 1204 NP=1, NPcG=0, NPcGtil=0, NPcH=0, NPcHB=0, NPcHDD=0, NPcHW=0, NPcHWB=0, NPcW=0, NPdcHB=0, NPdcHW=0, NPeHB=0, NPeHW=0, NPlH1=0, NPlH2=0, NPlHB=0, NPlHW=0, NPlebH=0, NPlebHB=0, NPlebHW=0, NPlebW=0, NPlequ1H=0, NPlequ3H=0, NPlequ3HW=0, NPlequ3W=0, NPqH=0, NPqHB=0, NPqHW=0, NPquH=0, NPquHB=0, NPquHW=0, NPquW=0, NPqujH=0, NPqujHB=0, NPqujHW=0, NPqujW=0, NPuH=0, NPuHB=0, NPuHW=0, NPuW=0, NPuebH=0, NPuebHB=0, NPuebHW=0, NPuebW=0, NPuqdH=0, NPuqdHB=0, NPuqdHW=0, NPuqdW=0, NPuuH=0, NPuuHB=0, NPuuHW=0, NPuuW=0, NPW=0, NPWtil=0

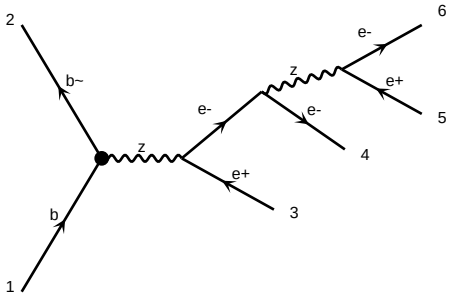

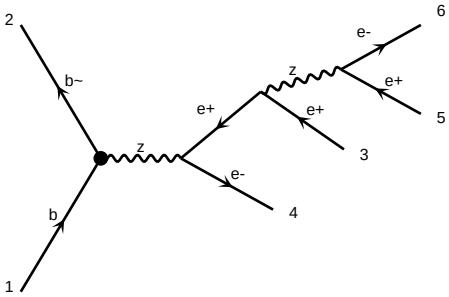

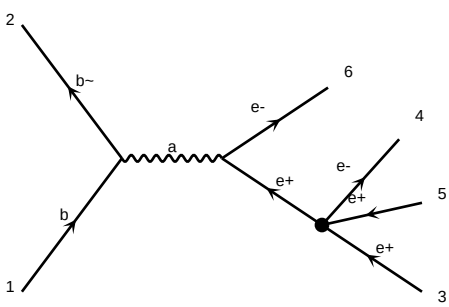

diagram 1207 NP=1, NPcG=0, NPcGtil=0, NPcH=0, NPcHB=0, NPcHDD=0, NPcHW=0, NPcHWB=0, NPcW=0, NPdcHB=0, NPdcHW=0, NPeHB=0, NPeHW=0, NPlH1=0, NPlH2=0, NPlHB=0, NPlHW=0, NPlebH=0, NPlebHB=0, NPlebHW=0, NPlebW=0, NPlequ1H=0, NPlequ3H=0, NPlequ3HW=0, NPlequ3W=0, NPqH=0, NPqHB=0, NPqHW=0, NPquH=0, NPquHB=0, NPquHW=0, NPquW=0, NPqujH=0, NPqujHB=0, NPqujHW=0, NPqujW=0, NPuH=0, NPuHB=0, NPuHW=0, NPuW=0, NPuebH=0, NPuebHB=0, NPuebHW=0, NPuebW=0, NPuqdH=0, NPuqdHB=0, NPuqdHW=0, NPuqdW=0, NPuuH=0, NPuuHB=0, NPuuHW=0, NPuuW=0, NPW=0, NPWtil=0

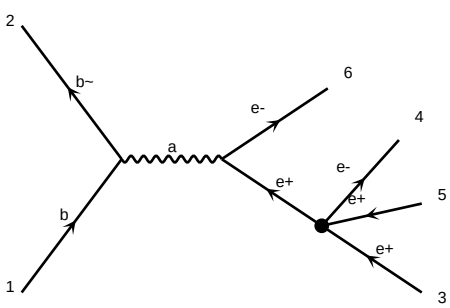

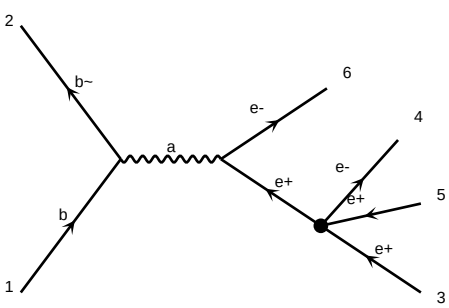

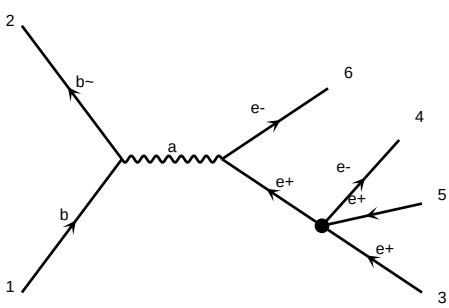

diagram 1210 NP=1, NPcG=0, NPcGtil=0, NPcH=0, NPcHB=0, NPcHDD=0, NPcHW=0, NPcHWB=0, NPcW=0, NPdcHB=0, NPdcHW=0, NPeHB=0, NPeHW=0, NPlH1=0, NPlH2=0, NPlHB=0, NPlHW=0, NPlebH=0, NPlebHB=0, NPlebHW=0, NPlebW=0, NPlequ1H=0, NPlequ3H=0, NPlequ3HW=0, NPlequ3W=0, NPqH=0, NPqHB=0, NPqHW=0, NPquH=0, NPquHB=0, NPquHW=0, NPquW=0, NPqujH=0, NPqujHB=0, NPqujHW=0, NPqujW=0, NPuH=0, NPuHB=0, NPuHW=0, NPuW=0, NPuebH=0, NPuebHB=0, NPuebHW=0, NPuebW=0, NPuqdH=0, NPuqdHB=0, NPuqdHW=0, NPuqdW=0, NPuuH=0, NPuuHB=0, NPuuHW=0, NPuuW=0, NPW=0, NPWtil=0

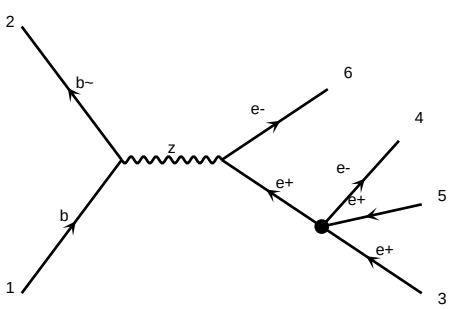

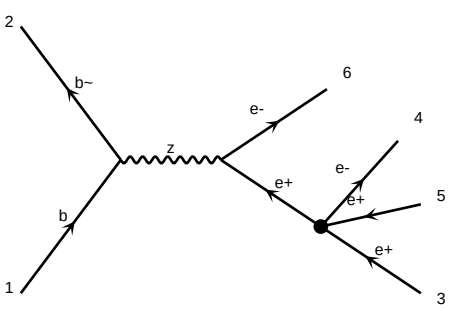

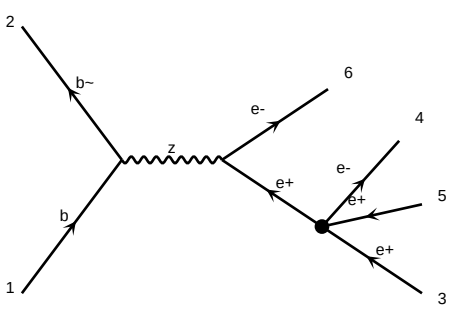

diagram 1213 NP=1, NPcG=0, NPcGtil=0, NPcH=0, NPcHB=0, NPcHDD=0, NPcHW=0, NPcHWB=0, NPcW=0, NPdcHB=0, NPdcHW=0, NPeHB=0, NPeHW=0, NPlH1=0, NPlH2=0, NPlHB=0, NPlHW=0, NPlebH=0, NPlebHB=0, NPlebHW=0, NPlebW=0, NPlequ1H=0, NPlequ3H=0, NPlequ3HW=0, NPlequ3W=0, NPqH=0, NPqHB=0, NPqHW=0, NPquH=0, NPquHB=0, NPquHW=0, NPquW=0, NPqujH=0, NPqujHB=0, NPqujHW=0, NPqujW=0, NPuH=0, NPuHB=0, NPuHW=0, NPuW=0, NPuebH=0, NPuebHB=0, NPuebHW=0, NPuebW=0, NPuqdH=0, NPuqdHB=0, NPuqdHW=0, NPuqdW=0, NPuuH=0, NPuuHB=0, NPuuHW=0, NPuuW=0, NPW=0, NPWtil=0

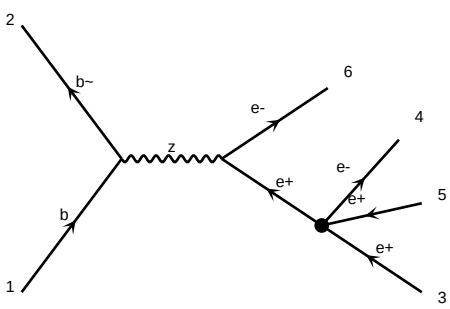

diagram 1216 NP=1, NPcG=0, NPcGtil=0, NPcH=0, NPcHB=0, NPcHBtil=0, NPcHDD=0, NPcHW=0, NPcHWB=0, NPcHWtil=0, NPcHbox=0, NPcbW=0, NPcbWtil=0, NPcbox=0, NPcdB=0, NPcdBtil=0, NPcdW=0, NPcdWtil=0, NPcll=0, NPcqq11=0, NPcqq31=0, NPcqq33=0, NPcuB=0, NPcuBtil=0, NPcuW=0, NPcuWtil=0, NPcuu=0, NPlq1=0, NPlq3=0, NPqd1=0, NPqd8=0, NPqe=0, NPqu1=0, NPqu8=0, NPud1=0, NPud8=0, NPuu=0

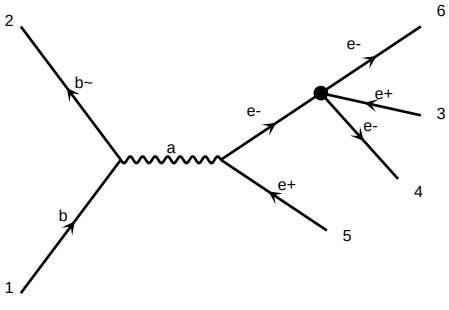

diagram 1217 NP=1, NPcG=0, NPcGtil=0, NPcH=0, NPcHB=0, NPcHBtil=0, NPcHDD=0, NPcHW=0, NPcHWB=0, NPcHWtil=0, NPcHbox=0, NPcbW=0, NPcbWtil=0, NPcbox=0, NPcdB=0, NPcdBtil=0, NPcdW=0, NPcdWtil=0, NPcll=0, NPcqq11=0, NPcqq31=0, NPcqq33=0, NPcuB=0, NPcuBtil=0, NPcuW=0, NPcuWtil=0, NPcuu=0, NPlq1=0, NPlq3=0, NPqd1=0, NPqd8=0, NPqe=0, NPqu1=0, NPqu8=0, NPud1=0, NPud8=0, NPuu=0

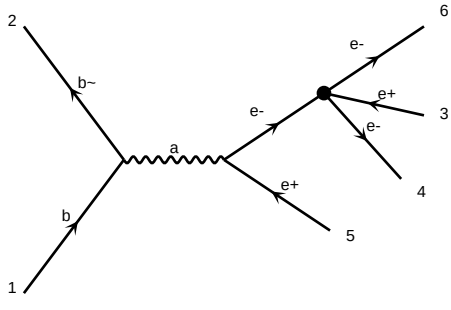

diagram 1218 NP=1, NPcG=0, NPcGtil=0, NPcH=0, NPcHB=0, NPcHBtil=0, NPcHDD=0, NPcHW=0, NPcHWB=0, NPcHWtil=0, NPcHbox=0, NPcbW=0, NPcbWtil=0, NPcbox=0, NPcdB=0, NPcdBtil=0, NPcdW=0, NPcdWtil=0, NPcll=0, NPcqq11=0, NPcqq31=0, NPcqq33=0, NPcuB=0, NPcuBtil=0, NPcuW=0, NPcuWtil=0, NPcuu=0, NPlq1=0, NPlq3=0, NPqd1=0, NPqd8=0, NPqe=0, NPqu1=0, NPqu8=0, NPud1=0, NPud8=0, NPuu=0

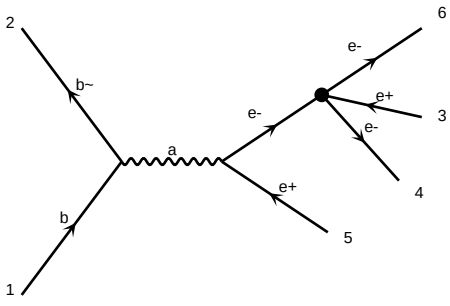

diagram 1219 NP=1, NPcG=0, NPcGtil=0, NPcH=0, NPcHB=0, NPcHBtil=0, NPcHDD=0, NPcHW=0, NPcHWB=0, NPcHWtil=0, NPcHbox=0, NPcbW=0, NPcbWtil=0, NPcbox=0, NPcdB=0, NPcdBtil=0, NPcdW=0, NPcdWtil=0, NPcll=0, NPcqq11=0, NPcqq31=0, NPcqq33=0, NPcuB=0, NPcuBtil=0, NPcuW=0, NPcuWtil=0, NPcuu=0, NPlq1=0, NPlq3=0, NPqd1=0, NPqd8=0, NPqe=0, NPqu1=0, NPqu8=0, NPud1=0, NPud8=0, NPuu=0

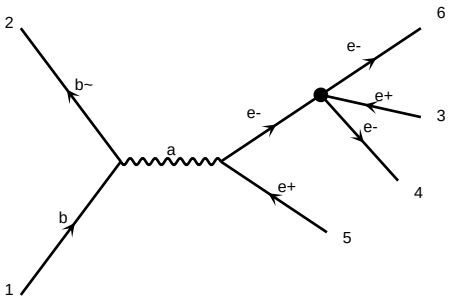

diagram 1220 NP=1, NPcG=0, NPcGtil=0, NPcH=0, NPcHB=0, NPcHBtil=0, NPcHDD=0, NPcHW=0, NPcHWB=0, NPcHWtil=0, NPcHbox=0, NPcbW=0, NPcbWtil=0, NPcbox=0, NPcdB=0, NPcdBtil=0, NPcdW=0, NPcdWtil=0, NPcll=0, NPcqq11=0, NPcqq31=0, NPcqq33=0, NPcuB=0, NPcuBtil=0, NPcuW=0, NPcuWtil=0, NPcuu=0, NPlq1=0, NPlq3=0, NPqd1=0, NPqd8=0, NPqe=0, NPqu1=0, NPqu8=0, NPud1=0, NPud8=0, NPuu=0

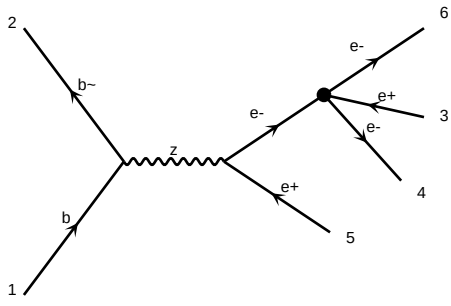

diagram 1221 NP=1, NPcG=0, NPcGtil=0, NPcH=0, NPcHB=0, NPcHBtil=0, NPcHDD=0, NPcHW=0, NPcHWB=0, NPcHWtil=0, NPcHbox=0, NPcbW=0, NPcbWtil=0, NPcbox=0, NPcdB=0, NPcdBtil=0, NPcdW=0, NPcdWtil=0, NPcll=0, NPcqq11=0, NPcqq31=0, NPcqq33=0, NPcuB=0, NPcuBtil=0, NPcuW=0, NPcuWtil=0, NPcuu=0, NPlq1=0, NPlq3=0, NPqd1=0, NPqd8=0, NPqe=0, NPqu1=0, NPqu8=0, NPud1=0, NPud8=0, NPuu=0

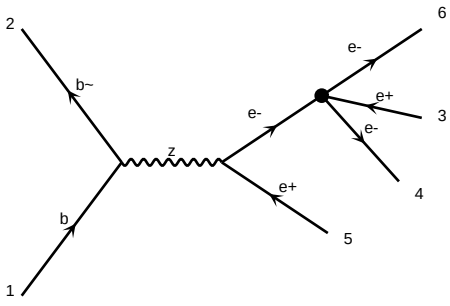

diagram 1222 NP=1, NPcG=0, NPcGtil=0, NPcH=0, NPcHB=0, NPcHBtil=0, NPcHDD=0, NPcHW=0, NPcHWB=0, NPcHWtil=0, NPcHbox=0, NPcbW=0, NPcbWtil=0, NPcbox=0, NPcdB=0, NPcdBtil=0, NPcdW=0, NPcdWtil=0, NPcll=0, NPcqq11=0, NPcqq31=0, NPcqq33=0, NPcuB=0, NPcuBtil=0, NPcuW=0, NPcuWtil=0, NPcuu=0, NPlq1=0, NPlq3=0, NPqd1=0, NPqd8=0, NPqe=0, NPqu1=0, NPqu8=0, NPud1=0, NPud8=0, NPuu=0

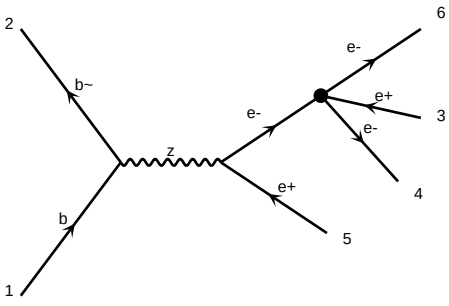

diagram 1223 NP=1, NPcG=0, NPcGtil=0, NPcH=0, NPcHB=0, NPcHBtil=0, NPcHDD=0, NPcHW=0, NPcHWB=0, NPcHWtil=0, NPcHbox=0, NPcbW=0, NPcbWtil=0, NPcbox=0, NPcdB=0, NPcdBtil=0, NPcdW=0, NPcdWtil=0, NPcll=0, NPcqq11=0, NPcqq31=0, NPcqq33=0, NPcuB=0, NPcuBtil=0, NPcuW=0, NPcuWtil=0, NPcuu=0, NPlq1=0, NPlq3=0, NPqd1=0, NPqd8=0, NPqe=0, NPqu1=0, NPqu8=0, NPud1=0, NPud8=0, NPuu=0

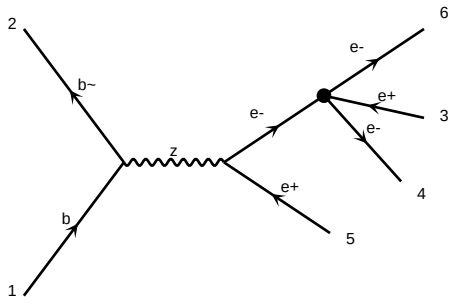

diagram 1224 NP=1, NPcG=0, NPcGtil=0, NPcH=0, NPcHB=0, NPcHBtil=0, NPcHDD=0, NPcHW=0, NPcHWB=0, NPcHWtil=0, NPcHbox=0, NPcbW=0, NPcbWtil=0, NPcbox=0, NPcdB=0, NPcdBtil=0, NPcdW=0, NPcdWtil=0, NPcll=0, NPcqq11=0, NPcqq31=0, NPcqq33=0, NPcuB=0, NPcuBtil=0, NPcuW=0, NPcuWtil=0, NPcuu=0, NPlq1=0, NPlq3=0, NPqd1=0, NPqd8=0, NPqe=0, NPqu1=0, NPqu8=0, NPud1=0, NPud8=0, NPuu=0

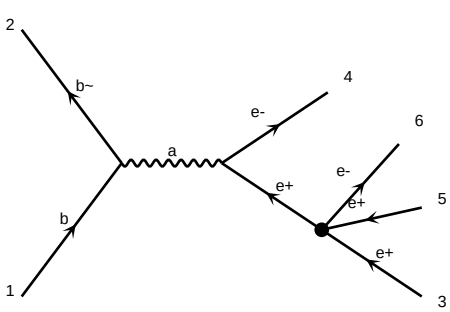

diagram 1225 NP=1, NPcG=0, NPcGtil=0, NPcH=0, NPcHB=0, NPcHBtil=0, NPcHDD=0, NPcHW=0, NPcHWB=0, NPcHWtil=0, NPcHbox=0, NPcbW=0, NPcbWtil=0, NPcbox=0, NPcdB=0, NPcdBtil=0, NPcdW=0, NPcdWtil=0, NPcll=0, NPcqq11=0, NPcqq31=0, NPcqq33=0, NPcuB=0, NPcuBtil=0, NPcuW=0, NPcuWtil=0, NPcuu=0, NPlq1=0, NPlq3=0, NPqd1=0, NPqd8=0, NPqe=0, NPqu1=0, NPqu8=0, NPud1=0, NPud8=0, NPuu=0

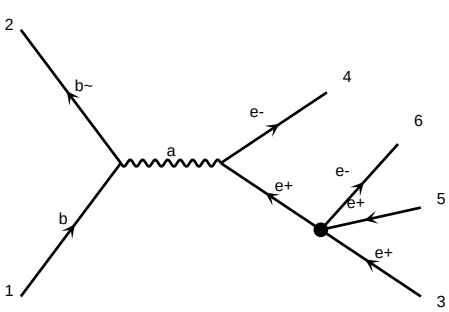

diagram 1226 NP=1, NPcG=0, NPcGtil=0, NPcH=0, NPcHB=0, NPcHBtil=0, NPcHDD=0, NPcHW=0, NPcHWB=0, NPcHWtil=0, NPcHbox=0, NPcbW=0, NPcbWtil=0, NPcbox=0, NPcdB=0, NPcdBtil=0, NPcdW=0, NPcdWtil=0, NPcll=0, NPcqq11=0, NPcqq31=0, NPcqq33=0, NPcuB=0, NPcuBtil=0, NPcuW=0, NPcuWtil=0, NPcuu=0, NPlq1=0, NPlq3=0, NPqd1=0, NPqd8=0, NPqe=0, NPqu1=0, NPqu8=0, NPud1=0, NPud8=0, NPuu=0

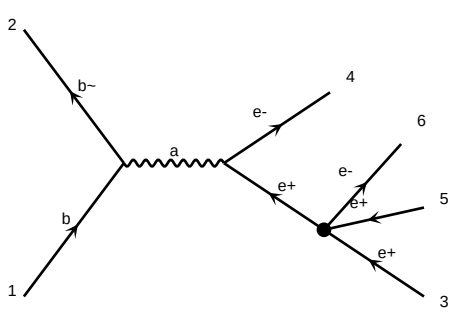

diagram 1227 NP=1, NPcG=0, NPcGtil=0, NPcH=0, NPcHB=0, NPcHBtil=0, NPcHDD=0, NPcHW=0, NPcHWB=0, NPcHWtil=0, NPcHbox=0, NPcbW=0, NPcbWtil=0, NPcbox=0, NPcdB=0, NPcdBtil=0, NPcdW=0, NPcdWtil=0, NPcll=0, NPcqq11=0, NPcqq31=0, NPcqq33=0, NPcuB=0, NPcuBtil=0, NPcuW=0, NPcuWtil=0, NPcuu=0, NPlq1=0, NPlq3=0, NPqd1=0, NPqd8=0, NPqe=0, NPqu1=0, NPqu8=0, NPud1=0, NPud8=0, NPuu=0

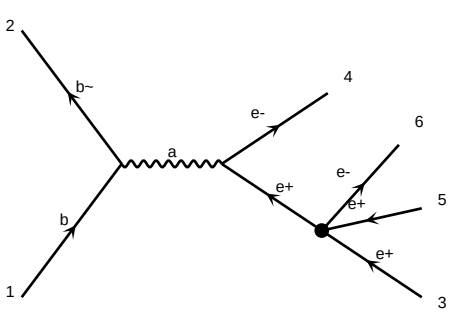

diagram 1228 NP=1, NPcG=0, NPcGtil=0, NPcH=0, NPcHB=0, NPcHBtil=0, NPcHDD=0, NPcHW=0, NPcHWB=0, NPcHWtil=0, NPcHbox=0, NPcbW=0, NPcbWtil=0, NPcbox=0, NPcdB=0, NPcdBtil=0, NPcdW=0, NPcdWtil=0, NPcll=0, NPcqq11=0, NPcqq31=0, NPcqq33=0, NPcuB=0, NPcuBtil=0, NPcuW=0, NPcuWtil=0, NPcuu=0, NPlq1=0, NPlq3=0, NPqd1=0, NPqd8=0, NPqe=0, NPqu1=0, NPqu8=0, NPud1=0, NPud8=0, NPuu=0

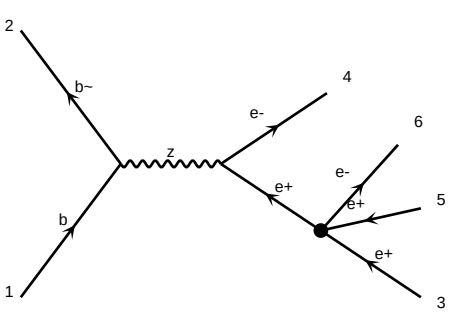

diagram 1229 NP=1, NPcG=0, NPcGtil=0, NPcH=0, NPcHB=0, NPcHBtil=0, NPcHDD=0, NPcHW=0, NPcHWB=0, NPcHWtil=0, NPcHbox=0, NPcbW=0, NPcbWtil=0, NPcbox=0, NPcdB=0, NPcdBtil=0, NPcdW=0, NPcdWtil=0, NPcll=0, NPcqq11=0, NPcqq31=0, NPcqq33=0, NPcuB=0, NPcuBtil=0, NPcuW=0, NPcuWtil=0, NPcuu=0, NPlq1=0, NPlq3=0, NPqd1=0, NPqd8=0, NPqe=0, NPqu1=0, NPqu8=0, NPud1=0, NPud8=0, NPuu=0

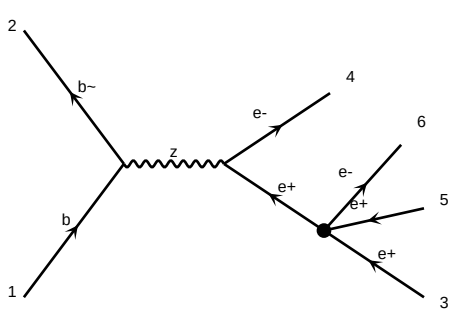

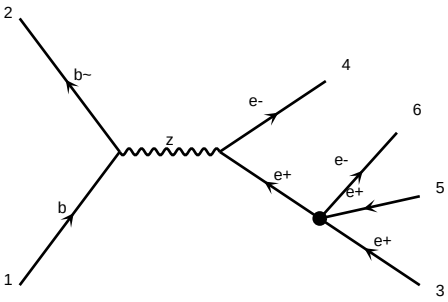

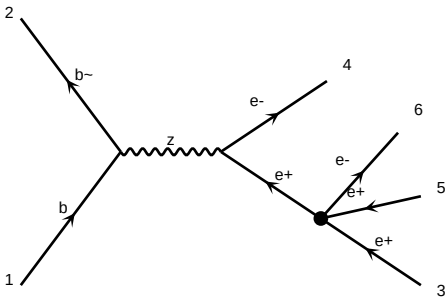

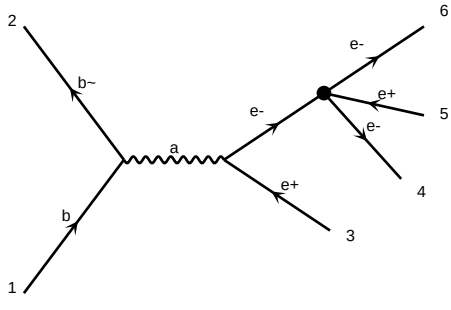

diagram 1231 NP=1, NPcG=0, NPcGtil=0, NPcH=0, NPcHB=0, NPcHDD=0, NPcHW=0, NPcHWB=0, NPcW=0, NPeHB=0, NPeW=0, NPlB=0, NPlH=0, NPlHD=0, NPlHE=0, NPlHL=0, NPlW=0, NPuB=0, NPuG=0, NPuH=0, NPuW=0

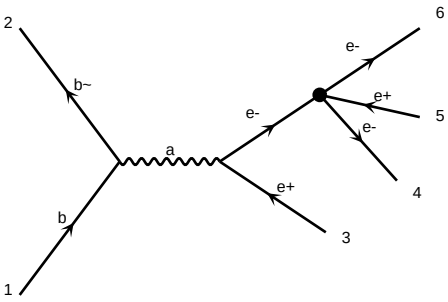

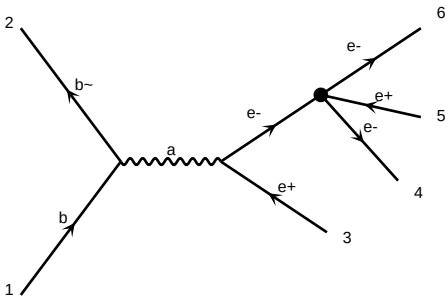

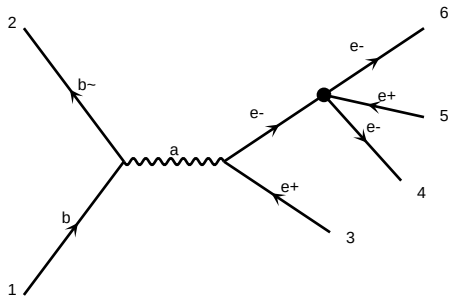

diagram 1234 NP=1, NPcG=0, NPcGtil=0, NPcH=0, NPcHB=0, NPcHDD=0, NPcHW=0, NPcHWB=0, NPcW=0, NPeHB=0, NPeW=0, NPlB=0, NPlH=0, NPlHD=0, NPlHE=0, NPlHL=0, NPlW=0, NPuB=0, NPuG=0, NPuH=0, NPuW=0

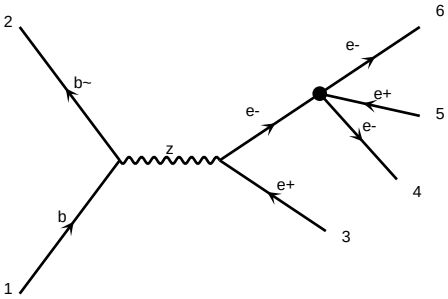

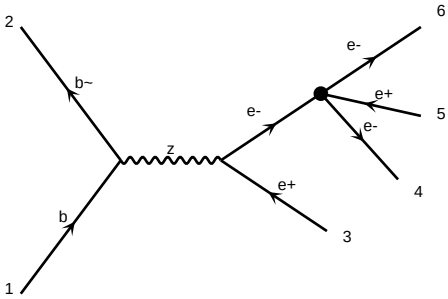

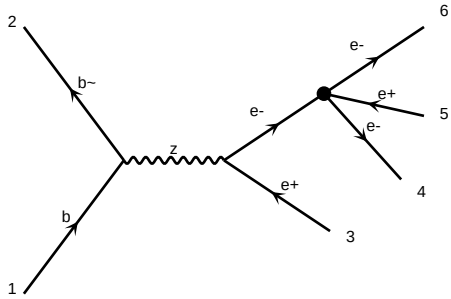

diagram 1237 NP=1, NPcG=0, NPcGtil=0, NPcH=0, NPcHB=0, NPcHDD=0, NPcHW=0, NPcHWB=0, NPcW=0, NPeHB=0, NPeW=0, NPlB=0, NPlH=0, NPlHD=0, NPlHE=0, NPlHL=0, NPlW=0, NPuB=0, NPuG=0, NPuH=0, NPuW=0

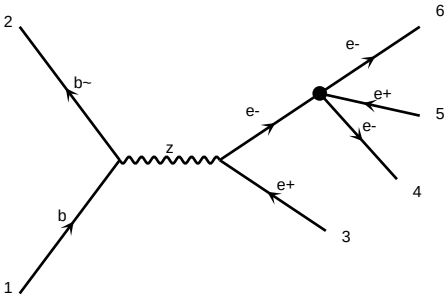

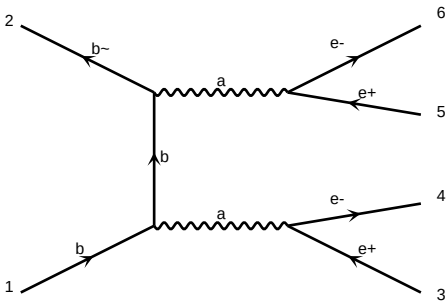

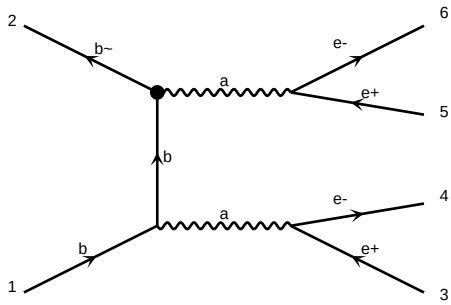

diagram 1240 NP=1, NPcG=0, NPcGtil=0, NPcH=0, NPcHB=0, NPcHDD=0, NPcHW=0, NPcHWB=0, NPcW=0, NPeHB=0, NPeW=0, NPlB=0, NPlH=0, NPlHD=0, NPlHE=0, NPlHL=0, NPlW=0, NPuB=0, NPuG=0, NPuH=0, NPuW=0

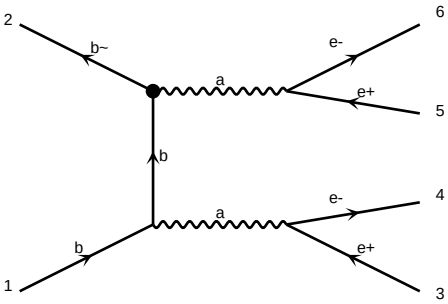

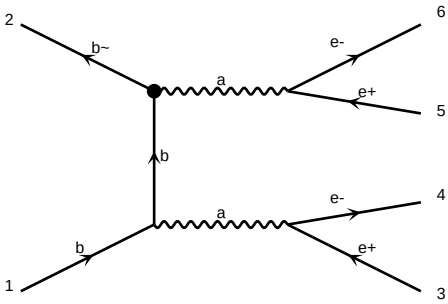

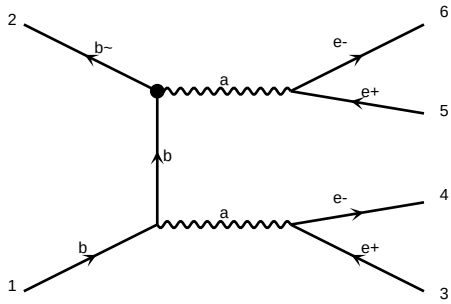

diagram 1243 NP=1, NPcG=0, NPcGtil=0, NPcH=0, NPcHB=0, NPcHDD=0, NPcHW=0, NPcHWB=0, NPcW=0, NPeHB=0, NPeW=0, NPlB=0, NPlH=0, NPlHD=0, NPlHE=0, NPlHL=0, NPlW=0, NPuB=0, NPuG=0, NPuH=0, NPuW=0

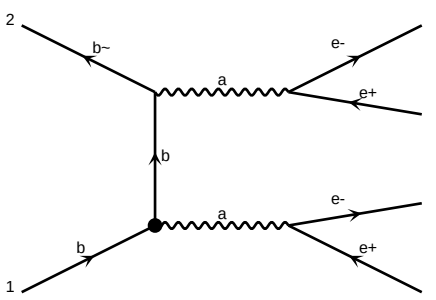

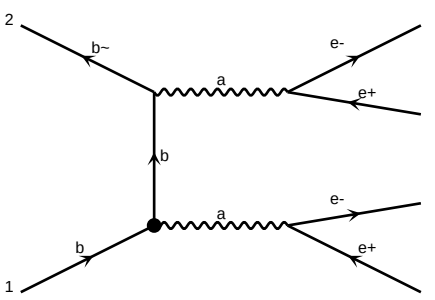

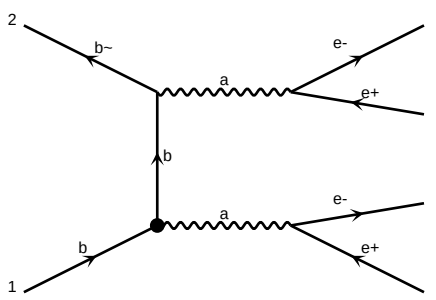

diagram 1246 NP=1, NPcG=0, NPcGtil=0, NPcH=0, NPcHB=0, NPcHBtil=0, NPcHDD=0, NPcHW=0, NPcHWB=0, NPcHWtil=0, NPcHWtil=0

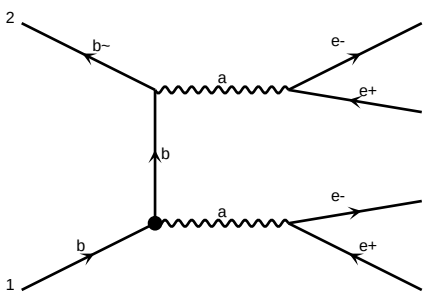

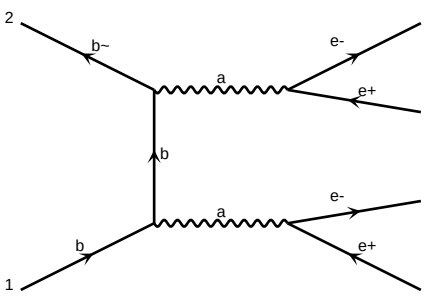

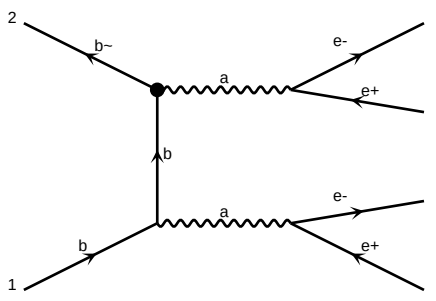

diagram 1249 NP=1, NPcG=0, NPcGtil=0, NPcH=0, NPcHB=0, NPcHBtil=0, NPcHDD=0, NPcHW=0, NPcHWB=0, NPcHWtil=0, NPcHWtil=0

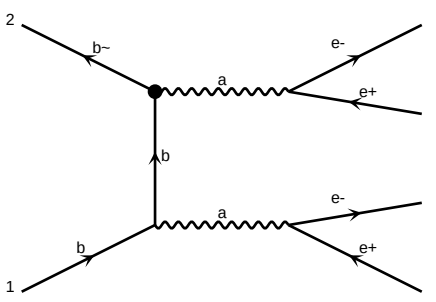

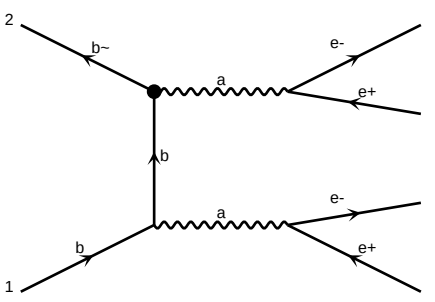

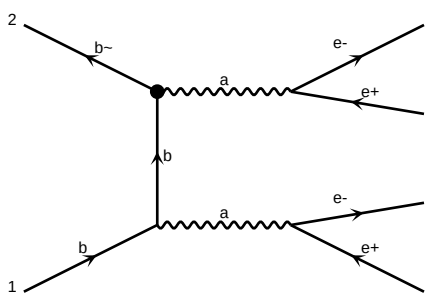

diagram 1252 NP=1, NPcG=0, NPcGtil=0, NPcH=0, NPcHB=0, NPcHBtil=0, NPcHDD=0, NPcHW=0, NPcHWB=0, NPcHWtil=0, NPcHWtil=0

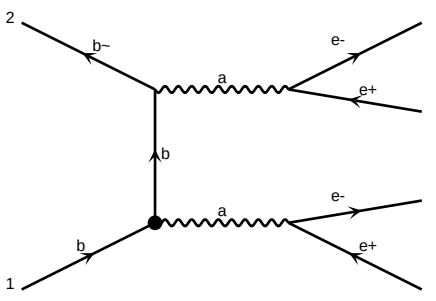

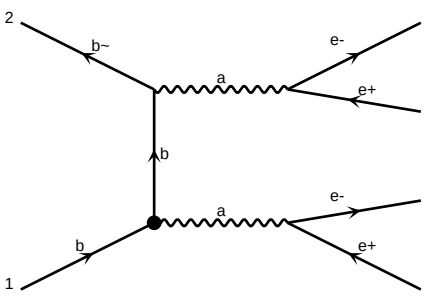

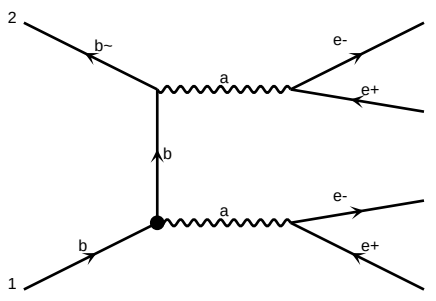

diagram 1255 NP=1, NPcG=0, NPcGtil=0, NPcH=0, NPcHB=0, NPcHBtil=0, NPcHDD=0, NPcHW=0, NPcHWB=0, NPcHWtil=0, NPcHWtil=0

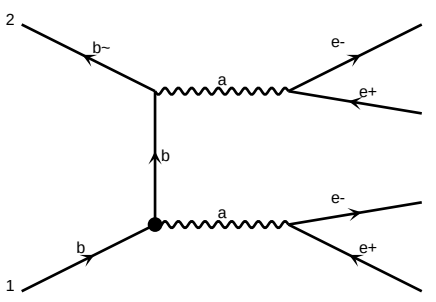

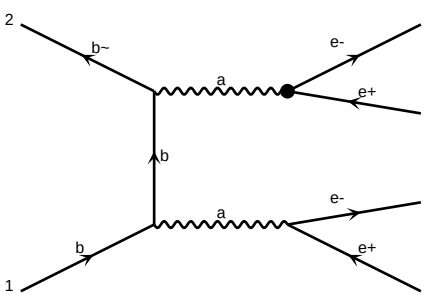

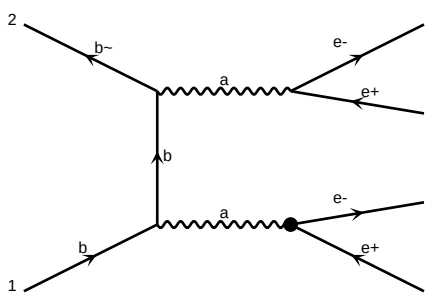

diagram 1258 NP=1, NPcG=0, NPcGtil=0, NPcH=0, NPcHB=0, NPcHBtil=0, NPcHDD=0, NPcHW=0, NPcHWB=0, NPcHWtil=0, NPcHWtil=0

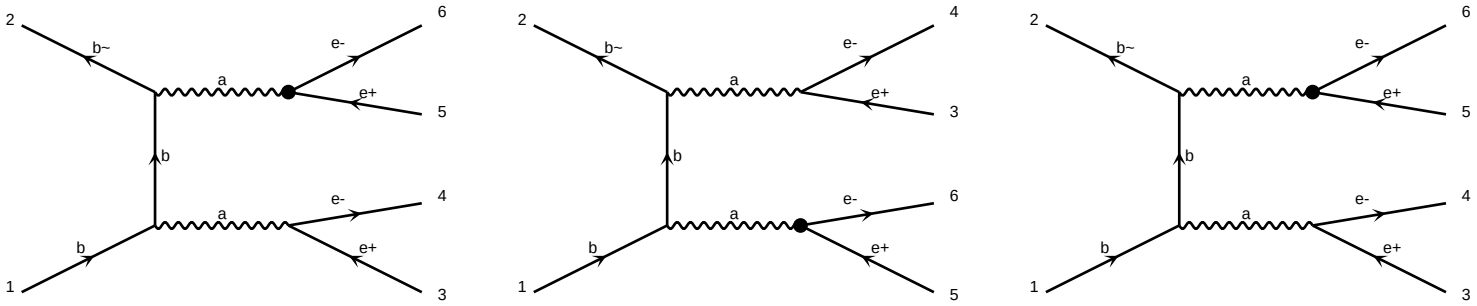

diagram 1261 NP=1, NPcG=0, NPcGtil=0, NPcH=0, NPcHB=0, NPcHDD=0, NPcHW=0, NPcHWB=0, NPcW=0, NPdcHBtil=0, NPdcHW=0, NPdcHWtil=0, NPlHQ3=0, NPlHQ=0, NPlebQ=0, NPleHQ=0, NPleHu=0, NPlequ1=0, NPlequ3=0, NPlu=0, NPqe=0, NPqu1=0, NPqu8=0, NPuHDD=0, NPuW=0, NPuWtil=0, NPuu=0, NPuu1=0, NPuu8=0, NPHIG=1, NPHIW=0, NPHIB=0, NPHIWB=0, NPHDC=0, NPHW=0, NPHWB=0, NPeH=0, NPeW=0, NPeB=0, NPuH=0, NPuW=0, NPuB=0, NPdH=0, NPdW=0, NPdB=0, NPlH1=0, NPlH3=0, NPlW=0, NPlB=0, NPqH1=0, NPqH3=0, NPqW=0, NPqB=0, NPqG=0, NPquH1=0, NPquH8=0, NPquW=0, NPquB=0, NPqdH1=0, NPqdH8=0, NPqdW=0, NPqdB=0, NPHG=0, NPHGtil=0, NPHWtil=0, NPHBtil=0, NPHWBtil=0, NPHDD=0, NPll=0, NPlq1=0, NPlq3=0, NPqq1=0, NPqq11=0, NPqq3=0, NPqq31=0, NPlu=0, NPqe=0, NPqu1=0, NPqu8=0, NPuu=0, NPuu1=0, NPuu8=0, NPld=0, NPqd1=0, NPqd8=0, NPud1=0, NPud8=0, NPdd=0, NPdd1=0, NPdd8=0, NPlequ1=0, NPlequ3=0, NPquqd1=0, NPquqd8=0, NPqqqd1=0, NPqqqd11=0, NPqqqd8=0, NPqqqd81=0, NPlle=0, NPlqe=0, NPqqqe=0, NPqqqe1=0, NPuue=0, NPlud=0, NPqde=0, NPqdu=0, NPqqu=0, NPqqu1=0, NPqqd=0, NPqqd1=0, NPddu=0, NPddu1=0, NPddd=0, NPddd1=0, NPlle1=0, NPlqe1=0, NPqqqe2=0, NPqqqe3=0, NPuue1=0, NPlud1=0, NPqde1=0, NPqdu1=0, NPqqu2=0, NPqqu3=0, NPqqd2=0, NPqqd3=0, NPddu2=0, NPddu3=0, NPddd2=0, NPddd3=0, NPlle2=0, NPlqe2=0, NPqqqe4=0, NPqqqe5=0, NPuue2=0, NPlud2=0, NPqde2=0, NPqdu2=0, NPqqu4=0, NPqqu5=0, NPqqd4=0, NPqqd5=0, NPddu4=0, NPddu5=0, NPddd4=0, NPddd5=0, NPlle3=0, NPlqe3=0, NPqqqe6=0, NPqqqe7=0, NPuue3=0, NPlud3=0, NPqde3=0, NPqdu3=0, NPqqu6=0, NPqqu7=0, NPqqd6=0, NPqqd7=0, NPddu6=0, NPddu7=0, NPddd6=0,

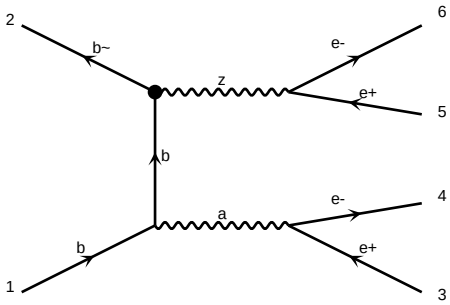

diagram 1276 NP=1, NPcG=0, NPcGtil=0, NPcH=0, NPcHB=0, NPcHDD=0, NPcHW=0, NPcHWB=0, NPcW=0, NPcWtil=0, NPdB=0, NPdBtil=0, NPdG=0, NPdW=0, NPeB=0, NPeH=0, NPeW=0, NPlH1=0, NPlH2=0, NPlHDD=0, NPlHWB=0, NPlL1=0, NPlL2=0, NPlQ1=0, NPlQ3=0, NPlW=0, NPqB=0, NPqG=0, NPqH=0, NPqW=0, NPuB=0, NPuG=0, NPuH=0, NPuW=0, NPuu1=0, NPuu2=0, NPuu3=0, NPuu4=0, NPuu5=0, NPuu6=0, NPuu7=0, NPuu8=0, NPuu9=0, NPuu10=0, NPuu11=0, NPuu12=0, NPuu13=0, NPuu14=0, NPuu15=0, NPuu16=0, NPuu17=0, NPuu18=0, NPuu19=0, NPuu20=0, NPuu21=0, NPuu22=0, NPuu23=0, NPuu24=0, NPuu25=0, NPuu26=0, NPuu27=0, NPuu28=0, NPuu29=0, NPuu30=0, NPuu31=0, NPuu32=0, NPuu33=0, NPuu34=0, NPuu35=0, NPuu36=0, NPuu37=0, NPuu38=0, NPuu39=0, NPuu40=0,

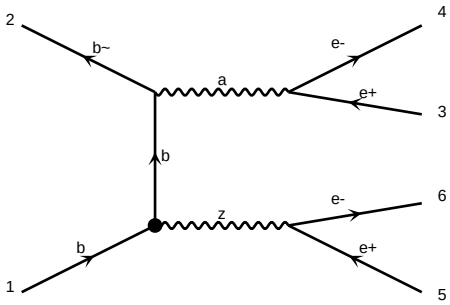

diagram 1291 NP=1, NPcG=0, NPcGtil=0, NPcH=0, NPcHB=0, NPcHDD=0, NPcHW=0, NPcHWB=0, NPcW=0, NPdB=0, NPdBtil=0, NPdW=0, NPdWtil=0, NPlB=0, NPlBtil=0, NPlH=0, NPlHDD=0, NPlHWB=0, NPlW=0, NPlWtil=0, NPuB=0, NPuBtil=0, NPuH=0, NPuW=0, NPuWtil=0, NPqqB1=0, NPqqB3=0, NPqqG1=0, NPqqG3=0, NPqqH1=0, NPqqH3=0, NPqqW1=0, NPqqW3=0, NPquB1=0, NPquB8=0, NPquG1=0, NPquG8=0, NPquH1=0, NPquH8=0, NPquW1=0, NPquW8=0, NPqdB1=0, NPqdB8=0, NPqdG1=0, NPqdG8=0, NPqdH1=0, NPqdH8=0, NPqdW1=0, NPqdW8=0, NPlqB1=0, NPlqB3=0, NPlqG1=0, NPlqG3=0, NPlqH1=0, NPlqH3=0, NPlqW1=0, NPlqW3=0, NPleB=0, NPleG=0, NPleH=0, NPleW=0, NPldB=0, NPldG=0, NPldH=0, NPldW=0, NPlu=0, NPlB=0, NPlG=0, NPlH=0, NPlW=0, NPeB=0, NPeG=0, NPeH=0, NPeW=0, NPdB=0, NPdG=0, NPdH=0, NPdW=0, NPlu=0, NPuB=0, NPuG=0, NPuH=0, NPuW=0, NPqeB=0, NPqeG=0, NPqeH=0, NPqeW=0, NPqdB=0, NPqdG=0, NPqdH=0, NPqdW=0, NPqu=0, NPquB=0, NPquG=0, NPquH=0, NPquW=0, NPqq1=0, NPqq3=0, NPlq1=0, NPlq3=0, NPle=0, NPld=0, NPlu=0, NPeu=0, NPqe=0, NPqd=0, NPqu=0, NPll=0, NPlq=0, NPqq

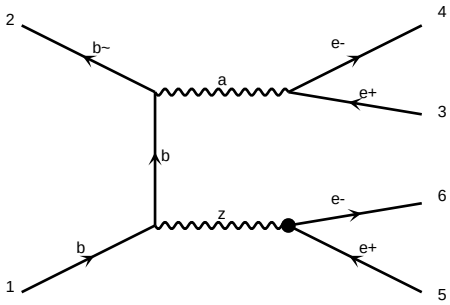

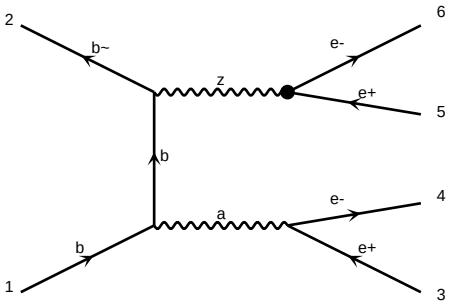

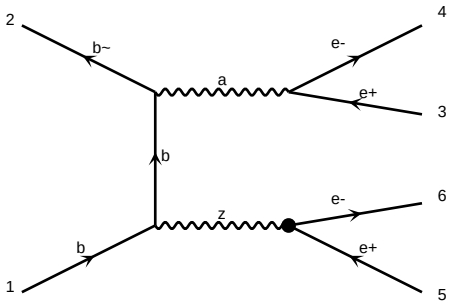

diagram 1306 NP=1, NPcG=0, NPcGtil=0, NPcH=0, NPcHB=0, NPcHDD=0, NPcHW=0, NPcHWB=0, NPcW=0

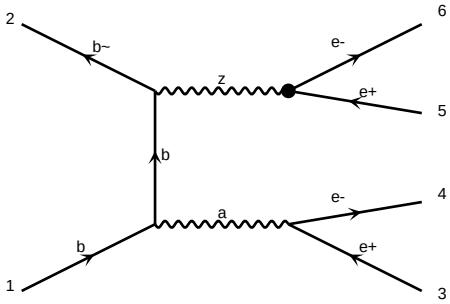

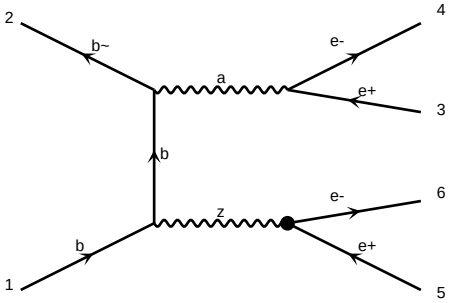

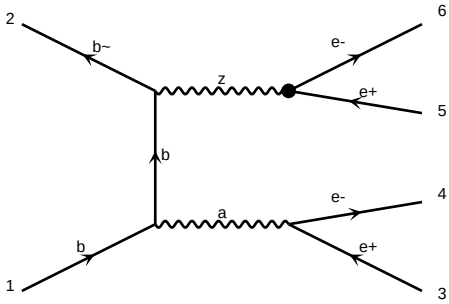

diagram 1309 NP=1, NPcG=0, NPcGtil=0, NPcH=0, NPcHB=0, NPcHDD=0, NPcHW=0, NPcHWB=0, NPcW=0

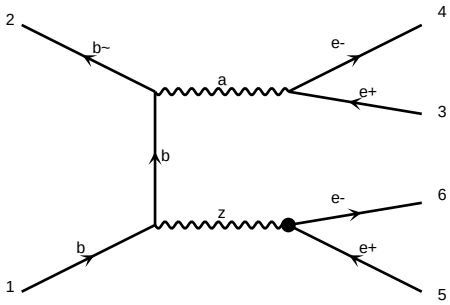

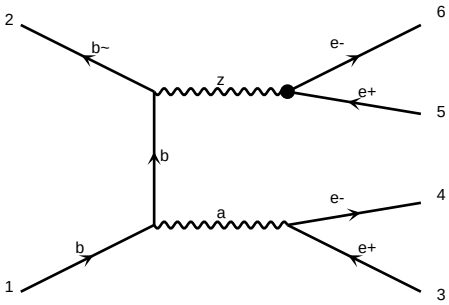

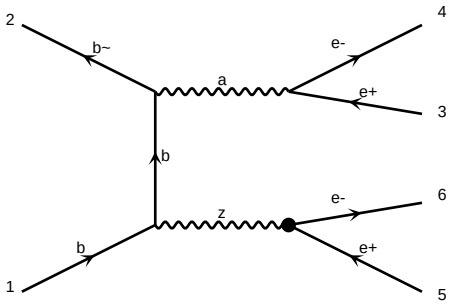

diagram 1312 NP=1, NPcG=0, NPcGtil=0, NPcH=0, NPcHB=0, NPcHDD=0, NPcHW=0, NPcHWB=0, NPcW=0

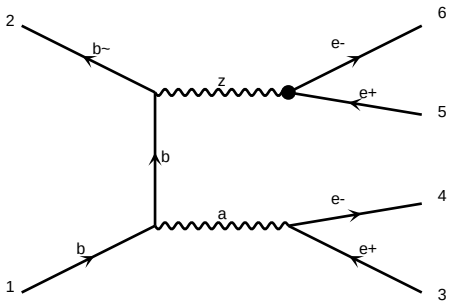

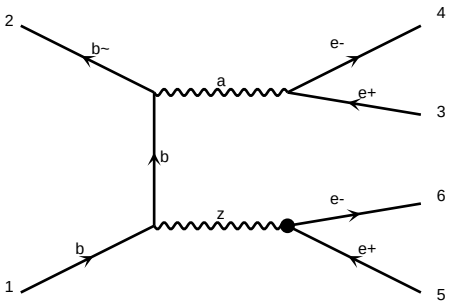

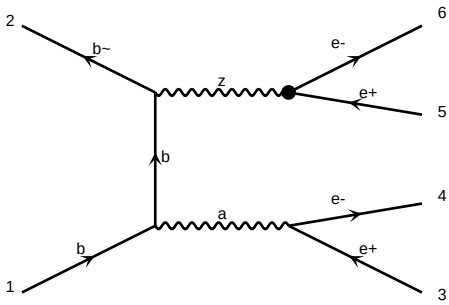

diagram 1315 NP=1, NPcG=0, NPcGtil=0, NPcH=0, NPcHB=0, NPcHDD=0, NPcHW=0, NPcHWB=0, NPcW=0

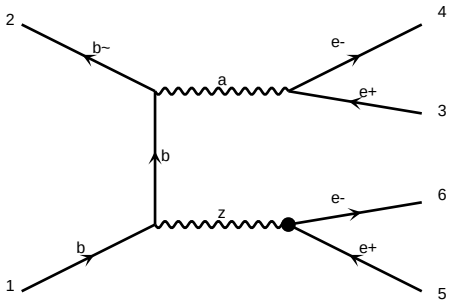

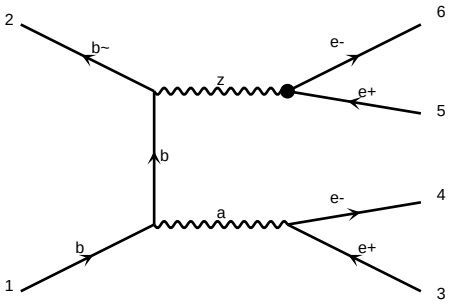

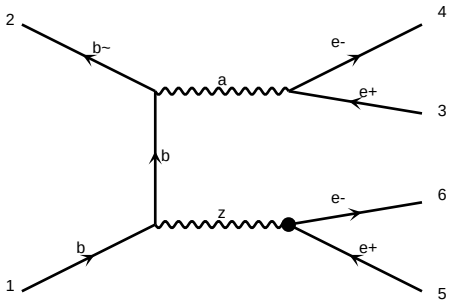

diagram 1318 NP=1, NPcG=0, NPcGtil=0, NPcH=0, NPcHB=0, NPcHDD=0, NPcHW=0, NPcHWB=0, NPcW=0

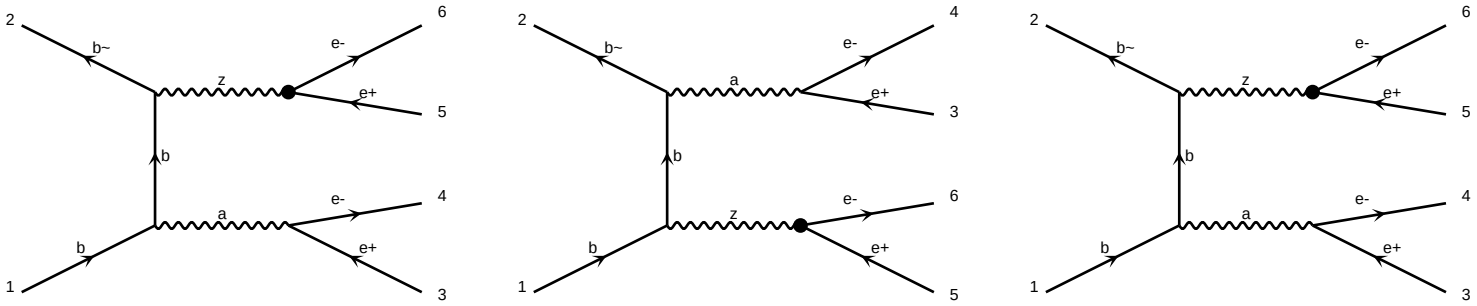

diagram 1321 NP=1, NPcG=0, NPcGtil=0, NPcH=0, NPcHB=0, NPcHDD=0, NPcHW=0, NPcHWB=0, NPcW=0, NPdCG=0, NPdCGtil=0, NPdCW=0, NPdCWtil=0, NPdHB=0, NPdHW=0, NPdHWB=0, NPdWW=0, NPdWWtil=0, NPlHDD=0, NPlHL1=0, NPlHL3=0, NPlHQ1=0, NPlHQ3=0, NPlHe=0, NPlHu=0, NPlLL=0, NPlLL1=0, NPlLQ1=0, NPlLQ3=0, NPlQQ1=0, NPlQQ8=0, NPlWW=0, NPlWWtil=0, NPlee=0, NPleu=0, NPlqq1=0, NPlqq3=0, NPlqq8=0, NPlqu1=0, NPlqu8=0, NPluu=0, NPuHDD=0, NPuHL1=0, NPuHL3=0, NPuHQ1=0, NPuHQ3=0, NPuHe=0, NPuHu=0, NPuLL=0, NPuLL1=0, NPuLQ1=0, NPuLQ3=0, NPuQQ1=0, NPuQQ8=0, NPuWW=0, NPuWWtil=0, NPuee=0, NPueu=0, NPuqq1=0, NPuqq3=0, NPuqq8=0, NPuqu1=0, NPuqu8=0, NPuuu=0, NPwHDD=0, NPwHL1=0, NPwHL3=0, NPwHQ1=0, NPwHQ3=0, NPwHe=0, NPwHu=0, NPwLL=0, NPwLL1=0, NPwLQ1=0, NPwLQ3=0, NPwQQ1=0, NPwQQ8=0, NPwWW=0, NPwWWtil=0, NPwee=0, NPweu=0, NPwqq1=0, NPwqq3=0, NPwqq8=0, NPwqu1=0, NPwqu8=0, NPwuu=0, NPHDD=0, NPHL1=0, NPHL3=0, NPHQ1=0, NPHQ3=0, NPHe=0, NPHu=0, NPLL=0, NPLL1=0, NPLQ1=0, NPLQ3=0, NPQQ1=0, NPQQ8=0, NPWW=0, NPWWtil=0, NPee=0, NPeu=0, NPqq1=0, NPqq3=0, NPqq8=0, NPqu1=0, NPqu8=0, NP

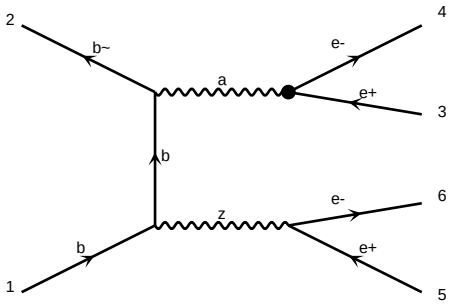

diagram 1336 NP=1, NPcG=0, NPcGtil=0, NPcH=0, NPcHB=0, NPcHDD=0, NPcHW=0, NPcHWB=0, NPcW=0, NPlB=0, NPlH=0, NPlHD=0, NPlHe=0, NPlHl=0, NPlHq=0, NPlHu=0, NPlW=0, NPlWB=0, NPlWe=0, NPlWl=0, NPlWq=0, NPqG=0, NPqH=0, NPqHD=0, NPqHu=0, NPqW=0, NPuG=0, NPuH=0, NPuW=0, QED=2, QNP=2, QNP^2==1, QNP^2<=1, QNP^2<=2, QNP^2<=3, QNP^2<=4, QNP^2<=5, QNP^2<=6, QNP^2<=7, QNP^2<=8, QNP^2<=9, QNP^2<=10, QNP^2<=11, QNP^2<=12, QNP^2<=13, QNP^2<=14, QNP^2<=15, QNP^2<=16, QNP^2<=17, QNP^2<=18, QNP^2<=19, QNP^2<=20, QNP^2<=21, QNP^2<=22, QNP^2<=23, QNP^2<=24, QNP^2<=25, QNP^2<=26, QNP^2<=27, QNP^2<=28, QNP^2<=29, QNP^2<=30, QNP^2<=31, QNP^2<=32, QNP^2<=33, QNP^2<=34, QNP^2<=35, QNP^2<=36, QNP^2<=37, QNP^2<=38, QNP^2<=39, QNP^2<=40,

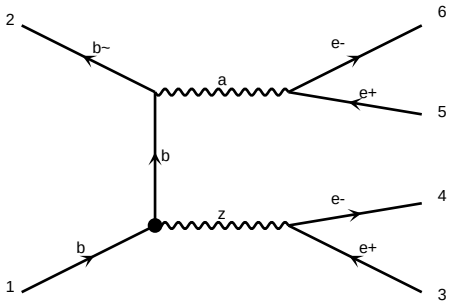

diagram 1351 NP=1, NPcG=0, NPcGtil=0, NPcH=0, NPcHB=0, NPcHDD=0, NPcHW=0, NPcHWB=0, NPcW=0, NPdcHBtil=0, NPdcHWtil=0, NPeHRe=0, NPeHWRe=0, NPlebRe=0, NPlebQRe=0, NPleHRe=0, NPleHWRe=0, NPlelRe=0, NPlqRe=0, NPqeRe=0, NPquRe=0, NPqqRe=0, NPquqdRe=0, NPuHRe=0, NPuWRe=0, NPeHIm=0, NPeHWIm=0, NPlebIm=0, NPlebQIm=0, NPleHIm=0, NPleHWIm=0, NPlelIm=0, NPlqIm=0, NPqeIm=0, NPquIm=0, NPqqIm=0, NPquqdIm=0, NPuHIm=0, NPuWIm=0, NPdHRe=0, NPdWRe=0, NPlebdRe=0, NPledRe=0, NPlqdRe=0, NPqdRe=0, NPquqdRe=0, NPdHIm=0, NPdWIm=0, NPlebdIm=0, NPledIm=0, NPlqdIm=0, NPqdIm=0, NPquqdIm=0, NPlHRe=0, NPlWRe=0, NPlHIm=0, NPlWIm=0, NPllRe=0, NPllQRe=0, NPlqRe=0, NPqlRe=0, NPqqRe=0, NPlqqqRe=0, NPllIm=0, NPllQIm=0, NPlqIm=0, NPqlIm=0, NPqqIm=0, NPlqqqIm=0, NPqHRe=0, NPqWRe=0, NPqHIm=0, NPqWIm=0, NPHRe=0, NPHQRe=0, NPHWRe=0, NPHWBRe=0, NPHBRe=0, NPHDRe=0, NPHWRe=0, NPHQIm=0, NPHWIm=0, NPHWBIm=0, NPHBIm=0, NPHDIm=0, NPHWIm=0, NPHudRe=0, NPHudIm=0, NPeWRe=0, NPeBRe=0, NPeWIm=0, NPeBIm=0, NPlWRe=0, NPlBRe=0, NPlQ3Re=0, NPlWIm=0, NPlBIm=0, NPlQ3Im=0, NPeuRe=0, NPeuIm=0, NPeQRe=0, NPeQIm=0, NPlQRe=0, NPlQIm=0, NPlu1Re=0, NPlu1Im=0, NPld1Re=0, NPld1Im=0, NPlQ1Re=0, NPlQ1Im=0, NPed1Re=0, NPed1Im=0, NPeu1Re=0, NPeu1Im=0, NPeQ1Re=0, NPeQ1Im=0, NPqu1Re=0, NPqu1Im=0, NPqd1Re=0, NPqd1Im=0, NPqQ1Re=0, NPqQ1Im=0, NPquqd1Re=0, NPquqd1Im=0, NPlequ1Re=0, NPlequ1Im=0, NPlequ3Re=0, NPlequ3Im=0, NPqqu1Re=0, NPqqu1Im=0, NPqqu3Re=0, NPqqu3Im=0, NPlqqu1Re=0, NPlqqu1Im=0, NPlqqu3Re=0, NPlqqu3Im=0, NPlqqd1Re=0, NPlqqd1Im=0, NPlqqd3Re=0, NPlqqd3Im=0, NPqqqd1Re=0, NPqqqd1Im=0, NPqqqd3Re=0, NPqqqd3Im=0, NPllu1Re=0, NPllu1Im=0, NPlld1Re=0, NPlld1Im=0, NPqe1Re=0, NPqe1Im=0, NPlqqq1Re=0, NPlqqq1Im=0, NPlqqq3Re=0, NPlqqq3Im=0, NPllQ1Re=0, NPllQ1Im=0, NPlQQ1Re=0, NPlQQ1Im=0, NPlQQ3Re=0, NPlQQ3Im=0, NPlQu1Re=0, NPlQu1Im=0, NPlQd1Re=0, NPlQd1Im=0, NPQu1Re=0, NPQu1Im=0, NPQd1Re=0, NPQd1Im=0, NPQQ1Re=0, NPQQ1Im=0, NPQQ3Re=0, NPQQ3Im=0, NPQe1Re=0, NPQe1Im=0, NPlQqe1Re=0, NPlQqe1Im=0, NPlQqe3Re=0, NPlQqe3Im=0, NPQqqu1Re=0, NPQqqu1Im=0, NPQqqu3Re=0, NPQqqu3Im=0, NPQqqd1Re=0, NPQqqd1Im=0, NPQqqd3Re=0, NPQqqd3Im=0, NPuu1Re=0, NPuu1Im=0, NPud1Re=0, NPud1Im=0, NPdd1Re=0, NPdd1Im=0, NPud8Re=0, NPud8Im=0, NPQuqd1Re=0, NPQuqd1Im=0, NPQuqd8Re=0, NPQuqd8Im=0, NPlu1Re=0, NPlu1Im=0, NPld1Re=0, NPld1Im=0, NPlQ1Re=0, NPlQ1Im=0, NPed1Re=0, NPed1Im=0, NPeu1Re=0, NPeu1Im=0, NPeQ1Re=0, NPeQ1Im=0, NPqu1Re=0, NPqu1Im=0, NPqd1Re=0, NPqd1Im=0, NPqQ1Re=0, NPqQ1Im=0, NPquqd1Re=0, NPquqd1Im=0, NPlequ1Re=0, NPlequ1Im=0, NPlequ3Re=0, NPlequ3Im=0, NPqqu1Re=0, NPqqu1Im=0, NPqqu3Re=0, NPqqu3Im=0, NPlqqu1Re=0, NPlqqu1Im=0, NPlqqu3Re=0, NPlqqu3Im=0, NPlqqd1Re=0, NPlqqd1Im=0, NPlqqd3Re=0, NPlqqd3Im=0, NPqqqd1Re=0, NPqqqd1Im=0, NPqqqd3Re=0, NPqqqd3Im=0, NPllu1Re=0, NPllu1Im=0, NPlld1Re=0, NPlld1Im=0, NPqe1Re=0, NPqe1Im=0, NPlqqq1Re=0, NPlqqq1Im=0, NPlqqq3Re=0, NPlqqq3Im=0, NPllQ1Re=0, NPllQ1Im=0, NPlQQ1Re=0, NPlQQ1Im=0, NPlQQ3Re=0, NPlQQ3Im=0, NPlQu1Re=0, NPlQu1Im=0, NPlQd1Re=0, NPlQd1Im=0, NPQu1Re=0, NPQu1Im=0, NPQd1Re=0, NPQd1Im=0, NPQQ1Re=0, NPQQ1Im=0, NPQQ3Re=0, NPQQ3Im=0, NPQe1Re=0, NPQe1Im=0, NPlQqe1Re=0, NPlQqe1Im=0, NPlQqe3Re=0, NPlQqe3Im=0, NPQqqu1Re=0, NPQqqu1Im=0, NPQqqu3Re=0, NPQqqu3Im=0, NPQqqd1Re=0, NPQqqd1Im=0, NPQqqd3Re=0, NPQqqd3Im=0, NPuu1Re=0, NPuu1Im=0, NPud1Re=0, NPud1Im=0, NPdd1Re=0, NPdd1Im=0, NPud8Re=0, NPud8Im=0, NPQuqd1Re=0, NPQuqd1Im=0, NPQuqd8Re=0, NPQuqd8Im=0

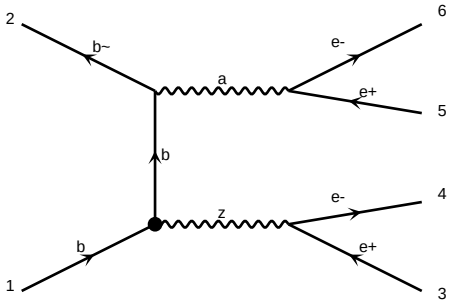

diagram 1354 NP=1, NPcG=0, NPcGtil=0, NPcH=0, NPcHB=0, NPcHDD=0, NPcHW=0, NPcHWB=0, NPcW=0, NPdcHBtil=0, NPdcHWtil=0, NPeHRe=0, NPeHWRe=0, NPlebRe=0, NPlebQRe=0, NPleHRe=0, NPleHWRe=0, NPlelRe=0, NPlqRe=0, NPqeRe=0, NPquRe=0, NPqqRe=0, NPquqdRe=0, NPuHRe=0, NPuWRe=0, NPeHIm=0, NPeHWIm=0, NPlebIm=0, NPlebQIm=0, NPleHIm=0, NPleHWIm=0, NPlelIm=0, NPlqIm=0, NPqeIm=0, NPquIm=0, NPqqIm=0, NPquqdIm=0, NPuHIm=0, NPuWIm=0, NPdHRe=0, NPdWRe=0, NPlebdRe=0, NPledRe=0, NPlqdRe=0, NPqdRe=0, NPquqdRe=0, NPdHIm=0, NPdWIm=0, NPlebdIm=0, NPledIm=0, NPlqdIm=0, NPqdIm=0, NPquqdIm=0, NPlHRe=0, NPlWRe=0, NPlHIm=0, NPlWIm=0, NPllRe=0, NPllQRe=0, NPlqRe=0, NPqlRe=0, NPqqRe=0, NPlqqqRe=0, NPllIm=0, NPllQIm=0, NPlqIm=0, NPqlIm=0, NPqqIm=0, NPlqqqIm=0, NPqHRe=0, NPqWRe=0, NPqHIm=0, NPqWIm=0, NPHRe=0, NPHQRe=0, NPHWRe=0, NPHWBRe=0, NPHBRe=0, NPHDRe=0, NPHWRe=0, NPHQIm=0, NPHWIm=0, NPHWBIm=0, NPHBIm=0, NPHDIm=0, NPHWIm=0, NPHudRe=0, NPHudIm=0, NPeWRe=0, NPeBRe=0, NPeWIm=0, NPeBIm=0, NPlWRe=0, NPlBRe=0, NPlQ3Re=0, NPlWIm=0, NPlBIm=0, NPlQ3Im=0, NPeuRe=0, NPeuIm=0, NPeQRe=0, NPeQIm=0, NPlQRe=0, NPlQIm=0, NPlu1Re=0, NPlu1Im=0, NPld1Re=0, NPld1Im=0, NPlQ1Re=0, NPlQ1Im=0, NPed1Re=0, NPed1Im=0, NPeu1Re=0, NPeu1Im=0, NPeQ1Re=0, NPeQ1Im=0, NPqu1Re=0, NPqu1Im=0, NPqd1Re=0, NPqd1Im=0, NPqQ1Re=0, NPqQ1Im=0, NPquqd1Re=0, NPquqd1Im=0, NPlequ1Re=0, NPlequ1Im=0, NPlequ3Re=0, NPlequ3Im=0, NPqqu1Re=0, NPqqu1Im=0, NPqqu3Re=0, NPqqu3Im=0, NPlqqu1Re=0, NPlqqu1Im=0, NPlqqu3Re=0, NPlqqu3Im=0, NPlqqd1Re=0, NPlqqd1Im=0, NPlqqd3Re=0, NPlqqd3Im=0, NPqqqd1Re=0, NPqqqd1Im=0, NPqqqd3Re=0, NPqqqd3Im=0, NPllu1Re=0, NPllu1Im=0, NPlld1Re=0, NPlld1Im=0, NPqe1Re=0, NPqe1Im=0, NPlqqq1Re=0, NPlqqq1Im=0, NPlqqq3Re=0, NPlqqq3Im=0, NPllQ1Re=0, NPllQ1Im=0, NPlQQ1Re=0, NPlQQ1Im=0, NPlQQ3Re=0, NPlQQ3Im=0, NPlQu1Re=0, NPlQu1Im=0, NPlQd1Re=0, NPlQd1Im=0, NPQu1Re=0, NPQu1Im=0, NPQd1Re=0, NPQd1Im=0, NPQQ1Re=0, NPQQ1Im=0, NPQQ3Re=0, NPQQ3Im=0, NPQe1Re=0, NPQe1Im=0, NPlQqe1Re=0, NPlQqe1Im=0, NPlQqe3Re=0, NPlQqe3Im=0, NPQqqu1Re=0, NPQqqu1Im=0, NPQqqu3Re=0, NPQqqu3Im=0, NPQqqd1Re=0, NPQqqd1Im=0, NPQqqd3Re=0, NPQqqd3Im=0, NPuu1Re=0, NPuu1Im=0, NPud1Re=0, NPud1Im=0, NPdd1Re=0, NPdd1Im=0, NPud8Re=0, NPud8Im=0, NPQuqd1Re=0, NPQuqd1Im=0, NPQuqd8Re=0, NPQuqd8Im=0

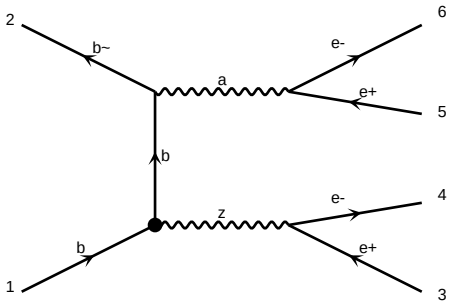

diagram 1357 NP=1, NPcG=0, NPcGtil=0, NPcH=0, NPcHB=0, NPcHDD=0, NPcHW=0, NPcHWB=0, NPcW=0, NPdcHBtil=0, NPdcHWtil=0, NPeHRe=0, NPeHWRe=0, NPlebRe=0, NPlebQRe=0, NPleHRe=0, NPleHWRe=0, NPlelRe=0, NPlqRe=0, NPqeRe=0, NPquRe=0, NPqqRe=0, NPquqdRe=0, NPuHRe=0, NPuWRe=0, NPeHIm=0, NPeHWIm=0, NPlebIm=0, NPlebQIm=0, NPleHIm=0, NPleHWIm=0, NPlelIm=0, NPlqIm=0, NPqeIm=0, NPquIm=0, NPqqIm=0, NPquqdIm=0, NPuHIm=0, NPuWIm=0, NPdHRe=0, NPdWRe=0, NPlebdRe=0, NPledRe=0, NPlqdRe=0, NPqdRe=0, NPquqdRe=0, NPdHIm=0, NPdWIm=0, NPlebdIm=0, NPledIm=0, NPlqdIm=0, NPqdIm=0, NPquqdIm=0, NPlHRe=0, NPlWRe=0, NPlHIm=0, NPlWIm=0, NPllRe=0, NPllQRe=0, NPlqRe=0, NPqlRe=0, NPqqRe=0, NPlqqqRe=0, NPllIm=0, NPllQIm=0, NPlqIm=0, NPqlIm=0, NPqqIm=0, NPlqqqIm=0, NPqHRe=0, NPqWRe=0, NPqHIm=0, NPqWIm=0, NPHRe=0, NPHQRe=0, NPHWRe=0, NPHWBRe=0, NPHBRe=0, NPHDRe=0, NPHWRe=0, NPHQIm=0, NPHWIm=0, NPHWBIm=0, NPHBIm=0, NPHDIm=0, NPHWIm=0, NPHudRe=0, NPHudIm=0, NPeWRe=0, NPeBRe=0, NPeWIm=0, NPeBIm=0, NPlWRe=0, NPlBRe=0, NPlQ3Re=0, NPlWIm=0, NPlBIm=0, NPlQ3Im=0, NPeuRe=0, NPeuIm=0, NPeQRe=0, NPeQIm=0, NPlQRe=0, NPlQIm=0, NPlu1Re=0, NPlu1Im=0, NPld1Re=0, NPld1Im=0, NPlQ1Re=0, NPlQ1Im=0, NPed1Re=0, NPed1Im=0, NPeu1Re=0, NPeu1Im=0, NPeQ1Re=0, NPeQ1Im=0, NPqu1Re=0, NPqu1Im=0, NPqd1Re=0, NPqd1Im=0, NPqQ1Re=0, NPqQ1Im=0, NPquqd1Re=0, NPquqd1Im=0, NPlequ1Re=0, NPlequ1Im=0, NPlequ3Re=0, NPlequ3Im=0, NPqqu1Re=0, NPqqu1Im=0, NPqqu3Re=0, NPqqu3Im=0, NPlqqu1Re=0, NPlqqu1Im=0, NPlqqu3Re=0, NPlqqu3Im=0, NPlqqd1Re=0, NPlqqd1Im=0, NPlqqd3Re=0, NPlqqd3Im=0, NPqqqd1Re=0, NPqqqd1Im=0, NPqqqd3Re=0, NPqqqd3Im=0, NPllu1Re=0, NPllu1Im=0, NPlld1Re=0, NPlld1Im=0, NPqe1Re=0, NPqe1Im=0, NPlqqq1Re=0, NPlqqq1Im=0, NPlqqq3Re=0, NPlqqq3Im=0, NPllQ1Re=0, NPllQ1Im=0, NPlQQ1Re=0, NPlQQ1Im=0, NPlQQ3Re=0, NPlQQ3Im=0, NPlQu1Re=0, NPlQu1Im=0, NPlQd1Re=0, NPlQd1Im=0, NPQu1Re=0, NPQu1Im=0, NPQd1Re=0, NPQd1Im=0, NPQQ1Re=0, NPQQ1Im=0, NPQQ3Re=0, NPQQ3Im=0, NPQe1Re=0, NPQe1Im=0, NPlQqe1Re=0, NPlQqe1Im=0, NPlQqe3Re=0, NPlQqe3Im=0, NPQqqu1Re=0, NPQqqu1Im=0, NPQqqu3Re=0, NPQqqu3Im=0, NPQqqd1Re=0, NPQqqd1Im=0, NPQqqd3Re=0, NPQqqd3Im=0, NPuu1Re=0, NPuu1Im=0, NPud1Re=0, NPud1Im=0, NPdd1Re=0, NPdd1Im=0, NPud8Re=0, NPud8Im=0, NPQuqd1Re=0, NPQuqd1Im=0, NPQuqd8Re=0, NPQuqd8Im=0

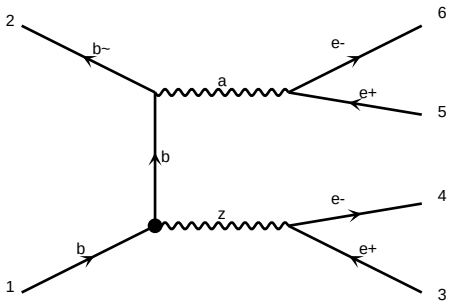

diagram 1360 NP=1, NPcG=0, NPcGtil=0, NPcH=0, NPcHB=0, NPcHDD=0, NPcHW=0, NPcHWB=0, NPcW=0, NPdcHBtil=0, NPdcHWtil=0, NPeHRe=0, NPeHWRe=0, NPlebRe=0, NPlebQRe=0, NPleHRe=0, NPleHWRe=0, NPlelRe=0, NPlqRe=0, NPqeRe=0, NPquRe=0, NPqqRe=0, NPquqdRe=0, NPuHRe=0, NPuWRe=0, NPeHIm=0, NPeHWIm=0, NPlebIm=0, NPlebQIm=0, NPleHIm=0, NPleHWIm=0, NPlelIm=0, NPlqIm=0, NPqeIm=0, NPquIm=0, NPqqIm=0, NPquqdIm=0, NPuHIm=0, NPuWIm=0, NPdHRe=0, NPdWRe=0, NPlebdRe=0, NPledRe=0, NPlqdRe=0, NPqdRe=0, NPquqdRe=0, NPdHIm=0, NPdWIm=0, NPlebdIm=0, NPledIm=0, NPlqdIm=0, NPqdIm=0, NPquqdIm=0, NPlHRe=0, NPlWRe=0, NPlHIm=0, NPlWIm=0, NPllRe=0, NPllQRe=0, NPlqRe=0, NPqlRe=0, NPqqRe=0, NPlqqqRe=0, NPllIm=0, NPllQIm=0, NPlqIm=0, NPqlIm=0, NPqqIm=0, NPlqqqIm=0, NPqHRe=0, NPqWRe=0, NPqHIm=0, NPqWIm=0, NPHRe=0, NPHQRe=0, NPHWRe=0, NPHWBRe=0, NPHBRe=0, NPHDRe=0, NPHWRe=0, NPHQIm=0, NPHWIm=0, NPHWBIm=0, NPHBIm=0, NPHDIm=0, NPHWIm=0, NPHudRe=0, NPHudIm=0, NPeWRe=0, NPeBRe=0, NPeWIm=0, NPeBIm=0, NPlWRe=0, NPlBRe=0, NPlQ3Re=0, NPlWIm=0, NPlBIm=0, NPlQ3Im=0, NPeuRe=0, NPeuIm=0, NPeQRe=0, NPeQIm=0, NPlQRe=0, NPlQIm=0, NPlu1Re=0, NPlu1Im=0, NPld1Re=0, NPld1Im=0, NPlQ1Re=0, NPlQ1Im=0, NPed1Re=0, NPed1Im=0, NPeu1Re=0, NPeu1Im=0, NPeQ1Re=0, NPeQ1Im=0, NPqu1Re=0, NPqu1Im=0, NPqd1Re=0, NPqd1Im=0, NPqQ1Re=0, NPqQ1Im=0, NPquqd1Re=0, NPquqd1Im=0, NPlequ1Re=0, NPlequ1Im=0, NPlequ3Re=0, NPlequ3Im=0, NPqqu1Re=0, NPqqu1Im=0, NPqqu3Re=0, NPqqu3Im=0, NPlqqu1Re=0, NPlqqu1Im=0, NPlqqu3Re=0, NPlqqu3Im=0, NPlqqd1Re=0, NPlqqd1Im=0, NPlqqd3Re=0, NPlqqd3Im=0, NPqqqd1Re=0, NPqqqd1Im=0, NPqqqd3Re=0, NPqqqd3Im=0, NPllu1Re=0, NPllu1Im=0, NPlld1Re=0, NPlld1Im=0, NPqe1Re=0, NPqe1Im=0, NPlqqq1Re=0, NPlqqq1Im=0, NPlqqq3Re=0, NPlqqq3Im=0, NPllQ1Re=0, NPllQ1Im=0, NPlQQ1Re=0, NPlQQ1Im=0, NPlQQ3Re=0, NPlQQ3Im=0, NPlQu1Re=0, NPlQu1Im=0, NPlQd1Re=0, NPlQd1Im=0, NPQu1Re=0, NPQu1Im=0, NPQd1Re=0, NPQd1Im=0, NPQQ1Re=0, NPQQ1Im=0, NPQQ3Re=0, NPQQ3Im=0, NPQe1Re=0, NPQe1Im=0, NPlQqe1Re=0, NPlQqe1Im=0, NPlQqe3Re=0, NPlQqe3Im=0, NPQqqu1Re=0, NPQqqu1Im=0, NPQqqu3Re=0, NPQqqu3Im=0, NPQqqd1Re=0, NPQqqd1Im=0, NPQqqd3Re=0, NPQqqd3Im=0, NPuu1Re=0, NPuu1Im=0, NPud1Re=0, NPud1Im=0, NPdd1Re=0, NPdd1Im=0, NPud8Re=0, NPud8Im=0, NPQuqd1Re=0, NPQuqd1Im=0, NPQuqd8Re=0, NPQuqd8Im=0

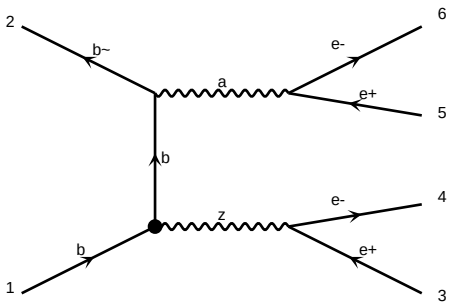

diagram 1363 NP=1, NPcG=0, NPcGtil=0, NPcH=0, NPcHB=0, NPcHDD=0, NPcHW=0, NPcHWB=0, NPcW=0, NPdcHBtil=0, NPdcHWtil=0, NPeHRe=0, NPeHWRe=0, NPlebRe=0, NPlebQRe=0, NPleHRe=0, NPleHWRe=0, NPlelRe=0, NPlqRe=0, NPqeRe=0, NPquRe=0, NPqqRe=0, NPquqdRe=0, NPuHRe=0, NPuWRe=0, NPeHIm=0, NPeHWIm=0, NPlebIm=0, NPlebQIm=0, NPleHIm=0, NPleHWIm=0, NPlelIm=0, NPlqIm=0, NPqeIm=0, NPquIm=0, NPqqIm=0, NPquqdIm=0, NPuHIm=0, NPuWIm=0, NPdHRe=0, NPdWRe=0, NPlebdRe=0, NPledRe=0, NPlqdRe=0, NPqdRe=0, NPquqdRe=0, NPdHIm=0, NPdWIm=0, NPlebdIm=0, NPledIm=0, NPlqdIm=0, NPqdIm=0, NPquqdIm=0, NPlHRe=0, NPlWRe=0, NPlHIm=0, NPlWIm=0, NPllRe=0, NPllQRe=0, NPlqRe=0, NPqlRe=0, NPqqRe=0, NPlqqqRe=0, NPllIm=0, NPllQIm=0, NPlqIm=0, NPqlIm=0, NPqqIm=0, NPlqqqIm=0, NPqHRe=0, NPqWRe=0, NPqHIm=0, NPqWIm=0, NPHRe=0, NPHQRe=0, NPHWRe=0, NPHWBRe=0, NPHBRe=0, NPHDRe=0, NPHWRe=0, NPHQIm=0, NPHWIm=0, NPHWBIm=0, NPHBIm=0, NPHDIm=0, NPHWIm=0, NPHudRe=0, NPHudIm=0, NPeWRe=0, NPeBRe=0, NPeWIm=0, NPeBIm=0, NPlWRe=0, NPlBRe=0, NPlQ3Re=0, NPlWIm=0, NPlBIm=0, NPlQ3Im=0, NPeuRe=0, NPeuIm=0, NPeQRe=0, NPeQIm=0, NPlQRe=0, NPlQIm=0, NPlu1Re=0, NPlu1Im=0, NPld1Re=0, NPld1Im=0, NPlQ1Re=0, NPlQ1Im=0, NPed1Re=0, NPed1Im=0, NPeu1Re=0, NPeu1Im=0, NPeQ1Re=0, NPeQ1Im=0, NPqu1Re=0, NPqu1Im=0, NPqd1Re=0, NPqd1Im=0, NPqQ1Re=0, NPqQ1Im=0, NPquqd1Re=0, NPquqd1Im=0, NPlequ1Re=0, NPlequ1Im=0, NPlequ3Re=0, NPlequ3Im=0, NPqqu1Re=0, NPqqu1Im=0, NPqqu3Re=0, NPqqu3Im=0, NPlqqu1Re=0, NPlqqu1Im=0, NPlqqu3Re=0, NPlqqu3Im=0, NPlqqd1Re=0, NPlqqd1Im=0, NPlqqd3Re=0, NPlqqd3Im=0, NPqqqd1Re=0, NPqqqd1Im=0, NPqqqd3Re=0, NPqqqd3Im=0, NPllu1Re=0, NPllu1Im=0, NPlld1Re=0, NPlld1Im=0, NPqe1Re=0, NPqe1Im=0, NPlqqq1Re=0, NPlqqq1Im=0, NPlqqq3Re=0, NPlqqq3Im=0, NPllQ1Re=0, NPllQ1Im=0, NPlQQ1Re=0, NPlQQ1Im=0, NPlQQ3Re=0, NPlQQ3Im=0, NPlQu1Re=0, NPlQu1Im=0, NPlQd1Re=0, NPlQd1Im=0, NPQu1Re=0, NPQu1Im=0, NPQd1Re=0, NPQd1Im=0, NPQQ1Re=0, NPQQ1Im=0, NPQQ3Re=0, NPQQ3Im=0, NPQe1Re=0, NPQe1Im=0, NPlQqe1Re=0, NPlQqe1Im=0, NPlQqe3Re=0, NPlQqe3Im=0, NPQqqu1Re=0, NPQqqu1Im=0, NPQqqu3Re=0, NPQqqu3Im=0, NPQqqd1Re=0, NPQqqd1Im=0, NPQqqd3Re=0, NPQqqd3Im=0, NPuu1Re=0, NPuu1Im=0, NPud1Re=0, NPud1Im=0, NPdd1Re=0, NPdd1Im=0, NPud8Re=0, NPud8Im=0, NPQuqd1Re=0, NPQuqd1Im=0, NPQuqd8Re=0, NPQuqd8Im=0

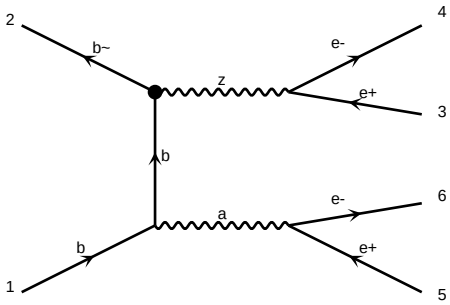

diagram 1366 NP=1, NPcG=0, NPcGtil=0, NPcH=0, NPcHB=0, NPcHDD=0, NPcHW=0, NPcHWB=0, NPcW=0, NPlB=0, NPlHD=0, NPlHe=0, NPlHl=0, NPlHq=0, NPlHu=0, NPlWB=0, NPlWq=0, NPlWu=0, NPuB=0, NPuW=0, NPuu1=0, NPuu8=0, NPqq1=0, NPqq3=0, NPqu1=0, NPqu8=0, NPqd1=0, NPqd8=0, NPquqd1=0, NPquqd8=0, NPlq1=0, NPlq3=0, NPlu=0, NPld=0, NPle=0, NPqe=0, NPeu=0, NPed=0, NPledq=0, NPlequ1=0, NPlequ3=0, NPll1=0, NPll=0, NPee=0, NPlu1=0, NPld1=0, NPle1=0, NPqe1=0, NPeu1=0, NPed1=0, NPlq1=0, NPlq3=0, NPqq1=0, NPqq3=0, NPqu1=0, NPqu8=0, NPqd1=0, NPqd8

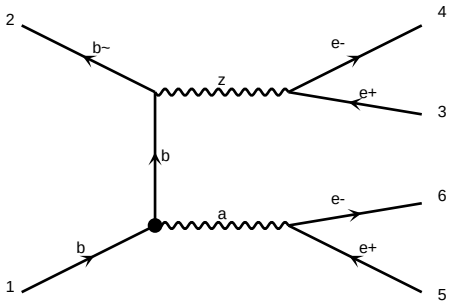

diagram 1381 NP=1, NPcG=0, NPcGtil=0, NPcH=0, NPcHB=0, NPcHDD=0, NPcHW=0, NPcHWB=0, NPcW=0, NPdB=0, NPdW=0, NPeB=0, NPeH=0, NPeW=0, NPlB=0, NPlH=0, NPlHD=0, NPlW=0, NPqB=0, NPqG=0, NPqH=0, NPqW=0, NPuB=0, NPuG=0, NPuH=0, NPuW=0

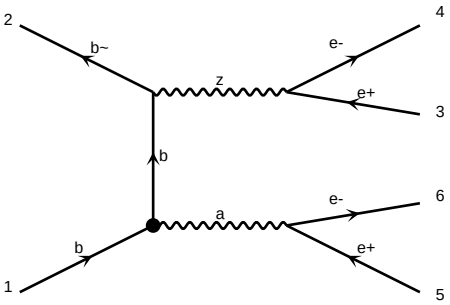

diagram 1382 NP=1, NPcG=0, NPcGtil=0, NPcH=0, NPcHB=0, NPcHDD=0, NPcHW=0, NPcHWB=0, NPcW=0, NPdB=0, NPdW=0, NPeB=0, NPeH=0, NPeW=0, NPlB=0, NPlH=0, NPlHD=0, NPlW=0, NPqB=0, NPqG=0, NPqH=0, NPqW=0, NPuB=0, NPuG=0, NPuH=0, NPuW=0

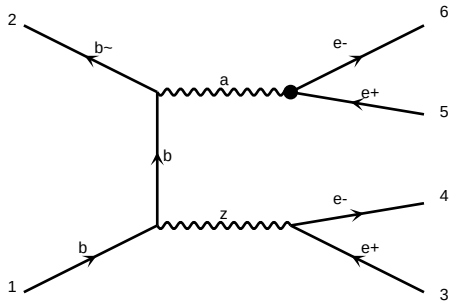

diagram 1383 NP=1, NPcG=0, NPcGtil=0, NPcH=0, NPcHB=0, NPcHDD=0, NPcHW=0, NPcHWB=0, NPcW=0, NPdB=0, NPdW=0, NPeB=0, NPeH=0, NPeW=0, NPlB=0, NPlH=0, NPlHD=0, NPlW=0, NPqB=0, NPqG=0, NPqH=0, NPqW=0, NPuB=0, NPuG=0, NPuH=0, NPuW=0

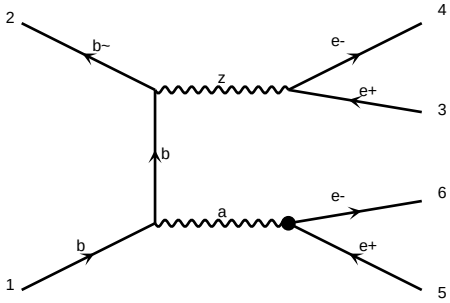

diagram 1384 NP=1, NPcG=0, NPcGtil=0, NPcH=0, NPcHB=0, NPcHDD=0, NPcHW=0, NPcHWB=0, NPcW=0, NPdB=0, NPdW=0, NPeB=0, NPeH=0, NPeW=0, NPlB=0, NPlH=0, NPlHD=0, NPlW=0, NPqB=0, NPqG=0, NPqH=0, NPqW=0, NPuB=0, NPuG=0, NPuH=0, NPuW=0

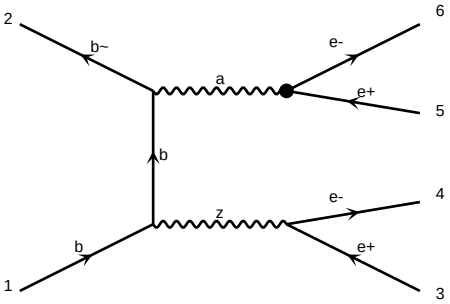

diagram 1385 NP=1, NPcG=0, NPcGtil=0, NPcH=0, NPcHB=0, NPcHDD=0, NPcHW=0, NPcHWB=0, NPcW=0, NPdB=0, NPdW=0, NPeB=0, NPeH=0, NPeW=0, NPlB=0, NPlH=0, NPlHD=0, NPlW=0, NPqB=0, NPqG=0, NPqH=0, NPqW=0, NPuB=0, NPuG=0, NPuH=0, NPuW=0

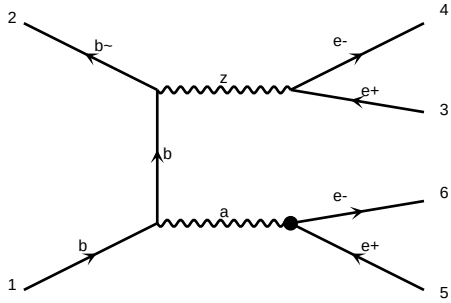

diagram 1386 NP=1, NPcG=0, NPcGtil=0, NPcH=0, NPcHB=0, NPcHDD=0, NPcHW=0, NPcHWB=0, NPcW=0, NPdB=0, NPdW=0, NPeB=0, NPeH=0, NPeW=0, NPlB=0, NPlH=0, NPlHD=0, NPlW=0, NPqB=0, NPqG=0, NPqH=0, NPqW=0, NPuB=0, NPuG=0, NPuH=0, NPuW=0

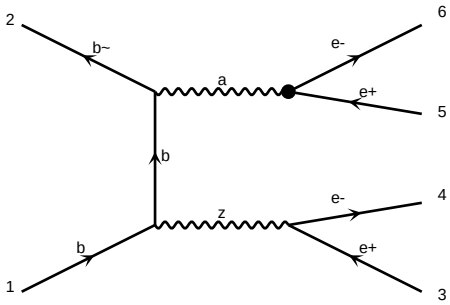

diagram 1387 NP=1, NPcG=0, NPcGtil=0, NPcH=0, NPcHB=0, NPcHDD=0, NPcHW=0, NPcHWB=0, NPcW=0, NPdB=0, NPdW=0, NPeB=0, NPeH=0, NPeW=0, NPlB=0, NPlH=0, NPlHD=0, NPlW=0, NPqB=0, NPqG=0, NPqH=0, NPqW=0, NPuB=0, NPuG=0, NPuH=0, NPuW=0

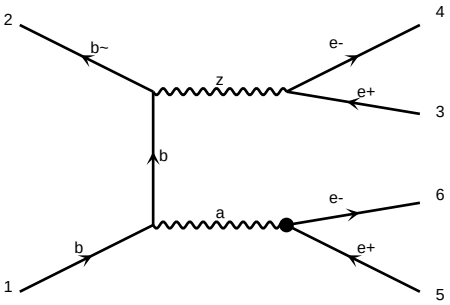

diagram 1388 NP=1, NPcG=0, NPcGtil=0, NPcH=0, NPcHB=0, NPcHDD=0, NPcHW=0, NPcHWB=0, NPcW=0, NPdB=0, NPdW=0, NPeB=0, NPeH=0, NPeW=0, NPlB=0, NPlH=0, NPlHD=0, NPlW=0, NPqB=0, NPqG=0, NPqH=0, NPqW=0, NPuB=0, NPuG=0, NPuH=0, NPuW=0

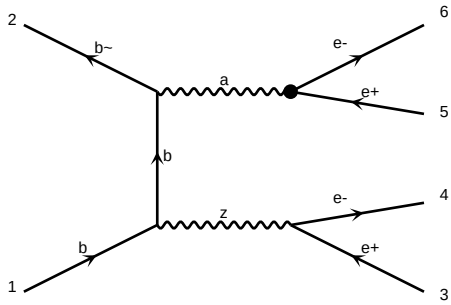

diagram 1389 NP=1, NPcG=0, NPcGtil=0, NPcH=0, NPcHB=0, NPcHDD=0, NPcHW=0, NPcHWB=0, NPcW=0, NPdB=0, NPdW=0, NPeB=0, NPeH=0, NPeW=0, NPlB=0, NPlH=0, NPlHD=0, NPlW=0, NPqB=0, NPqG=0, NPqH=0, NPqW=0, NPuB=0, NPuG=0, NPuH=0, NPuW=0

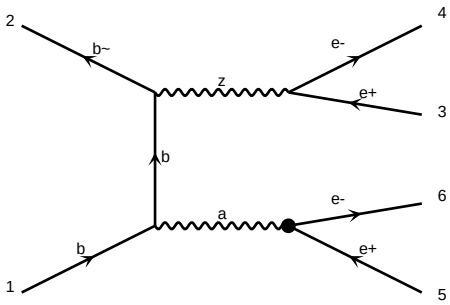

diagram 1390 NP=1, NPcG=0, NPcGtil=0, NPcH=0, NPcHB=0, NPcHDD=0, NPcHW=0, NPcHWB=0, NPcW=0, NPdB=0, NPdW=0, NPeB=0, NPeH=0, NPeW=0, NPlB=0, NPlH=0, NPlHD=0, NPlW=0, NPqB=0, NPqG=0, NPqH=0, NPqW=0, NPuB=0, NPuG=0, NPuH=0, NPuW=0

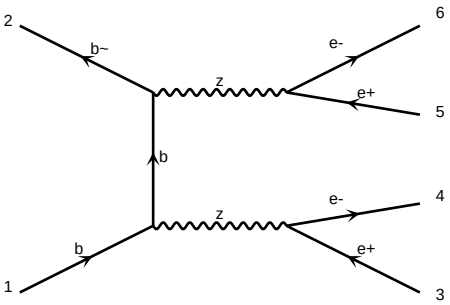

diagram 1391 NP=1, NPcG=0, NPcGtil=0, NPcH=0, NPcHB=0, NPcHDD=0, NPcHW=0, NPcHWB=0, NPcW=0, NPdB=0, NPdW=0, NPeB=0, NPeH=0, NPeW=0, NPlB=0, NPlH=0, NPlHD=0, NPlW=0, NPqB=0, NPqG=0, NPqH=0, NPqW=0, NPuB=0, NPuG=0, NPuH=0, NPuW=0

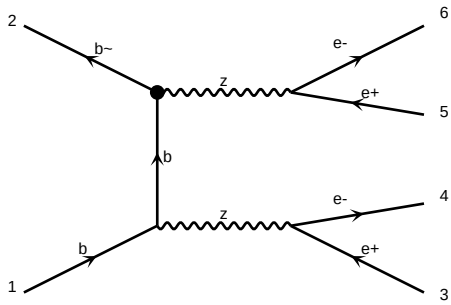

diagram 1392 NP=1, NPcG=0, NPcGtil=0, NPcH=0, NPcHB=0, NPcHDD=0, NPcHW=0, NPcHWB=0, NPcW=0, NPdB=0, NPdW=0, NPeB=0, NPeH=0, NPeW=0, NPlB=0, NPlH=0, NPlHD=0, NPlW=0, NPqB=0, NPqG=0, NPqH=0, NPqW=0, NPuB=0, NPuG=0, NPuH=0, NPuW=0

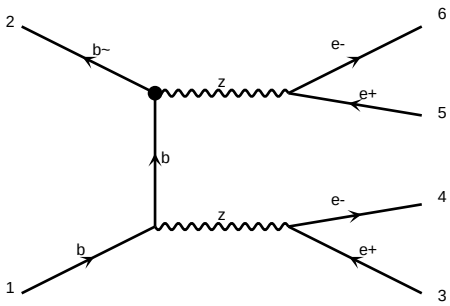

diagram 1393 NP=1, NPcG=0, NPcGtil=0, NPcH=0, NPcHB=0, NPcHDD=0, NPcHW=0, NPcHWB=0, NPcW=0, NPdB=0, NPdW=0, NPeB=0, NPeH=0, NPeW=0, NPlB=0, NPlH=0, NPlHD=0, NPlW=0, NPqB=0, NPqG=0, NPqH=0, NPqW=0, NPuB=0, NPuG=0, NPuH=0, NPuW=0

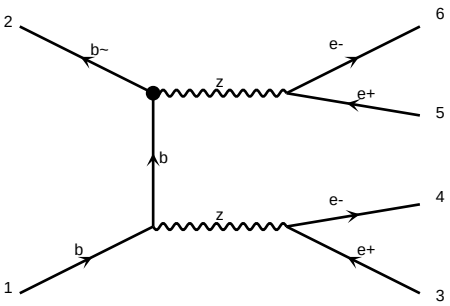

diagram 1394 NP=1, NPcG=0, NPcGtil=0, NPcH=0, NPcHB=0, NPcHDD=0, NPcHW=0, NPcHWB=0, NPcW=0, NPdB=0, NPdW=0, NPeB=0, NPeH=0, NPeW=0, NPlB=0, NPlH=0, NPlHD=0, NPlW=0, NPqB=0, NPqG=0, NPqH=0, NPqW=0, NPuB=0, NPuG=0, NPuH=0, NPuW=0

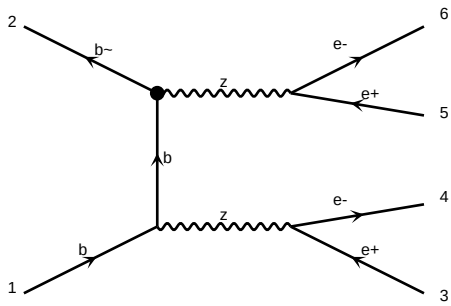

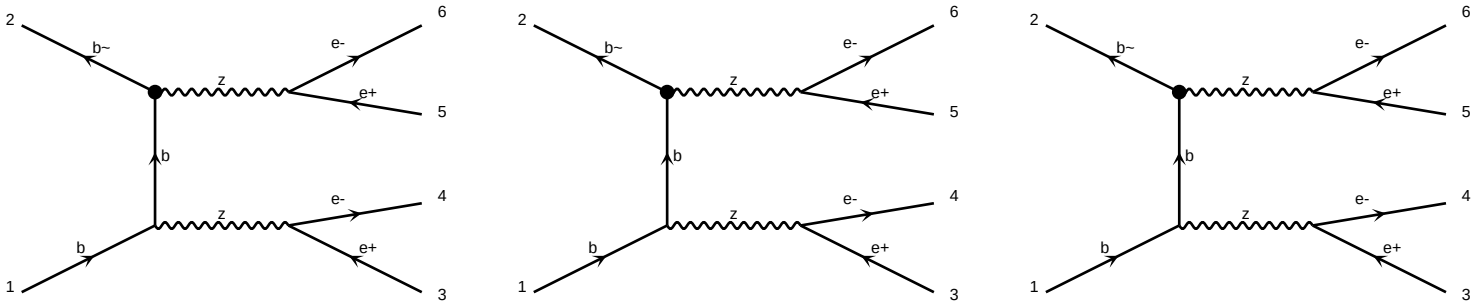

diagram 1396 NP=1, NPcG=0, NPcGtil=0, NPcH=0, NPcHB=0, NPcHBtil=0, NPcHDD=0, NPcHW=0, NPcHWB=0, NPcHWtil=0, NPcHWtil=0, NPcHWtil

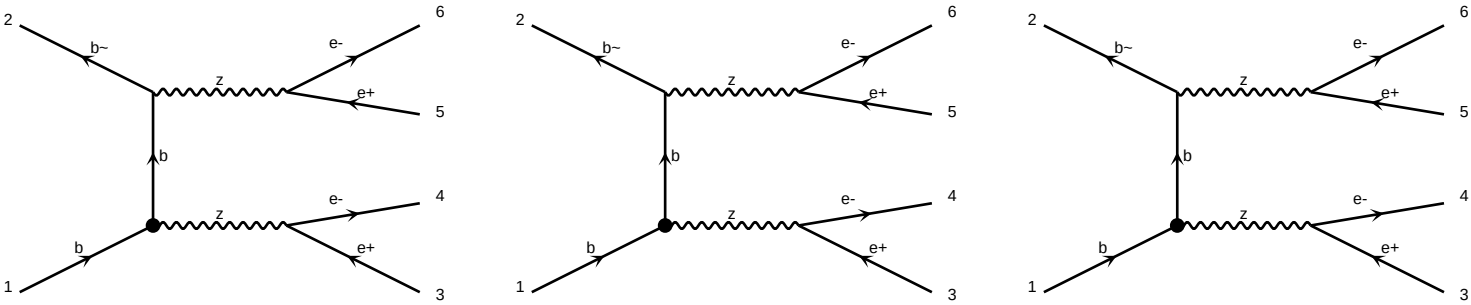

diagram 1411 NP=1, NPcG=0, NPcGtil=0, NPcH=0, NPcHB=0, NPcHD=0, NPcHW=0, NPcHWB=0, NPcHWtil=0, NPcW=0, NPcWtil=0, NPcbG=0, NPcbGtil=0, NPcbW=0, NPcbWtil=0, NPcpQ3=0, NPcpQM=0, NPtG=0, NPtW=0

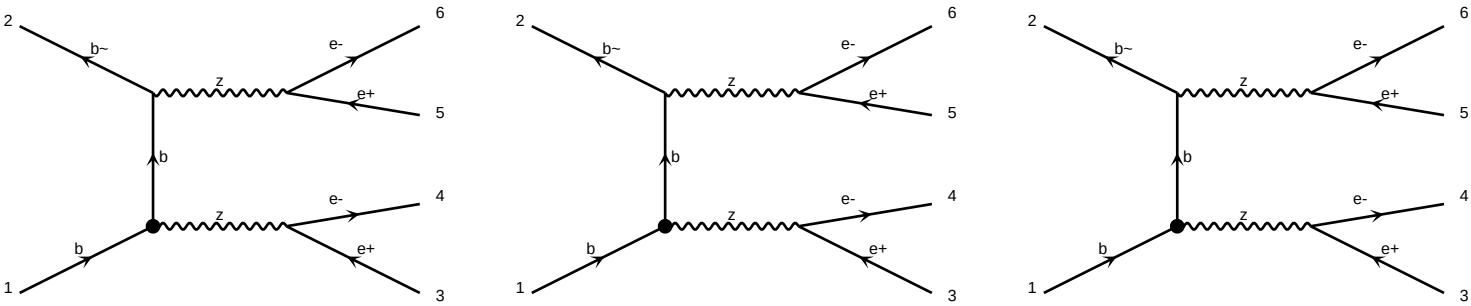

diagram 1414 NP=1, NPcG=0, NPcGtil=0, NPcH=0, NPcHB=0, NPcHD=0, NPcHW=0, NPcHWB=0, NPcHWtil=0, NPcW=0, NPcWtil=0, NPcbG=0, NPcbGtil=0, NPcbW=0, NPcbWtil=0, NPcpQ3=0, NPcpQM=0, NPtG=0, NPtW=0

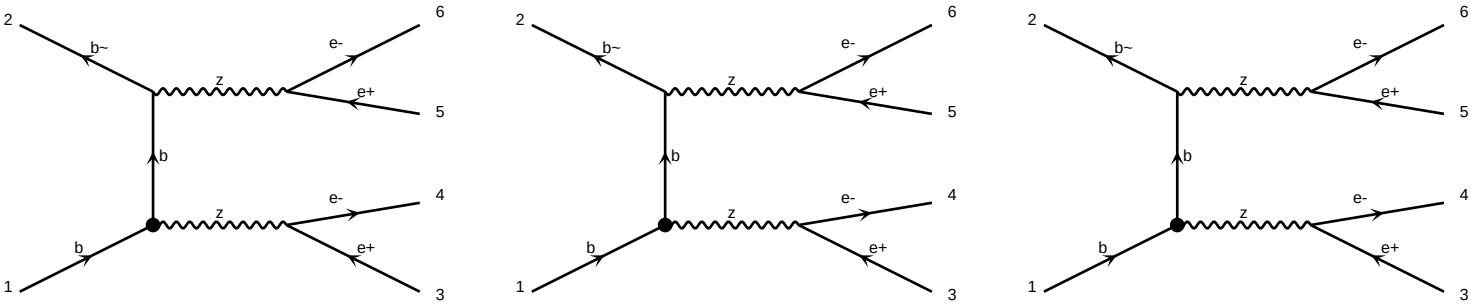

diagram 1417 NP=1, NPcG=0, NPcGtil=0, NPcH=0, NPcHB=0, NPcHD=0, NPcHW=0, NPcHWB=0, NPcHWtil=0, NPcW=0, NPcWtil=0, NPcbG=0, NPcbGtil=0, NPcbW=0, NPcbWtil=0, NPcpQ3=0, NPcpQM=0, NPtG=0, NPtW=0

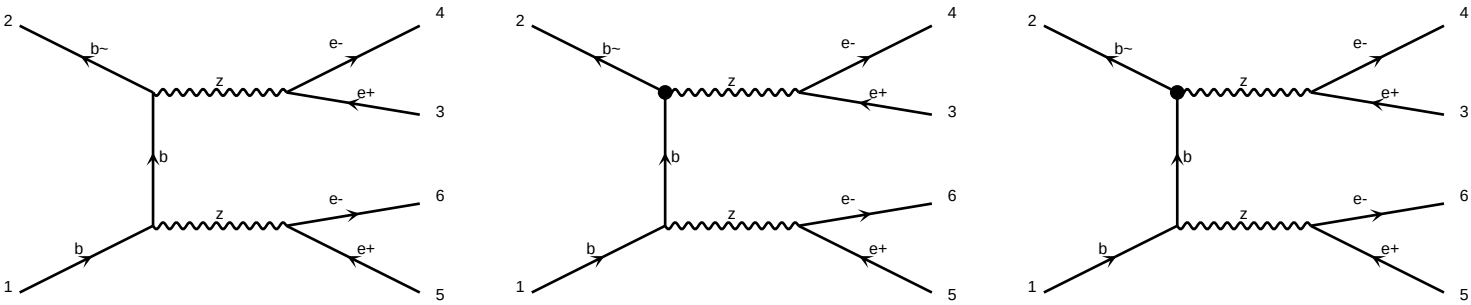

diagram 1420 NP=0, NPcG=0, NPcGtil=0, NPcH=0, NPcHB=0, NPcHD=0, NPcHW=0, NPcHWB=0, NPcHWtil=0, NPcW=0, NPcWtil=0, NPcbG=0, NPcbGtil=0, NPcbW=0, NPcbWtil=0, NPcpQ3=0, NPcpQM=0, NPtG=0, NPtW=0

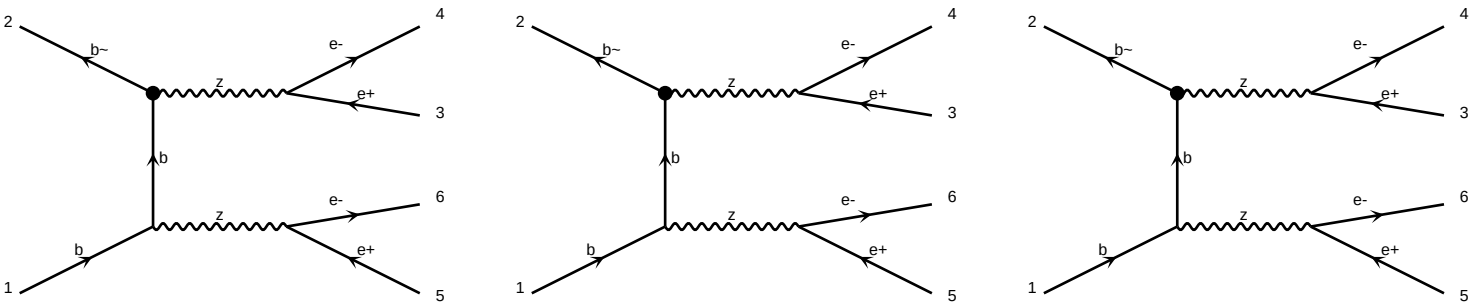

diagram 1423 NP=1, NPcG=0, NPcGtil=0, NPcH=0, NPcHB=0, NPcHD=0, NPcHW=0, NPcHWB=0, NPcHWtil=0, NPcW=0, NPcWtil=0, NPcbG=0, NPcbGtil=0, NPcbW=0, NPcbWtil=0, NPcpQ3=0, NPcpQM=0, NPtG=0, NPtW=0

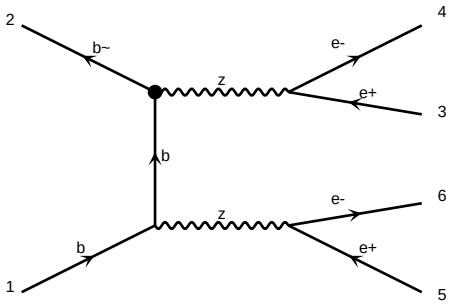

diagram 1426 NP=1, NPcG=0, NPcGtil=0, NPcH=0, NPcHB=0, NPcHDD=0, NPcHW=0, NPcHWB=0, NPcW=0, NPcWtil=0, NPlq1=0, NPlq3=0, NPqe=0, NPqu1=0, NPqu8=0, NPqd1=0, NPqd8=0, NPledq=0, NPlequ1=0, NPlequ3=0, NPld=0, NPle=0, NPlu=0, NPeu=0, NPed=0

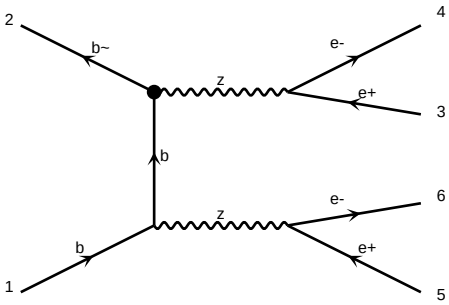

diagram 1427 NP=1, NPcG=0, NPcGtil=0, NPcH=0, NPcHB=0, NPcHDD=0, NPcHW=0, NPcHWB=0, NPcW=0, NPcWtil=0, NPlq1=0, NPlq3=0, NPqe=0, NPqu1=0, NPqu8=0, NPqd1=0, NPqd8=0, NPledq=0, NPlequ1=0, NPlequ3=0, NPld=0, NPle=0, NPlu=0, NPeu=0, NPed=0

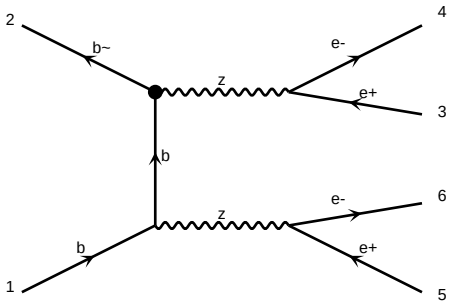

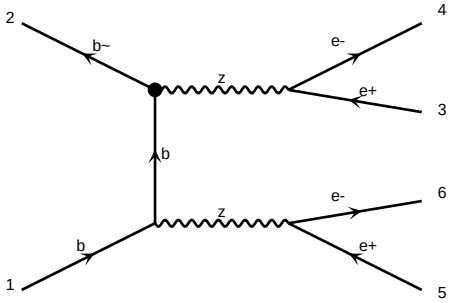

diagram 1429 NP=1, NPcG=0, NPcGtil=0, NPcH=0, NPcHB=0, NPcHDD=0, NPcHW=0, NPcHWB=0, NPcW=0, NPcWtil=0, NPlq1=0, NPlq3=0, NPqe=0, NPqu1=0, NPqu8=0, NPqd1=0, NPqd8=0, NPledq=0, NPlequ1=0, NPlequ3=0, NPld=0, NPle=0, NPlu=0, NPeu=0, NPed=0

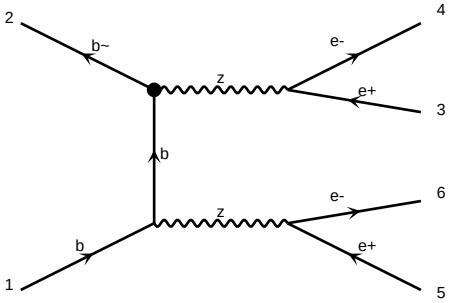

diagram 1430 NP=1, NPcG=0, NPcGtil=0, NPcH=0, NPcHB=0, NPcHDD=0, NPcHW=0, NPcHWB=0, NPcW=0, NPcWtil=0, NPlq1=0, NPlq3=0, NPqe=0, NPqu1=0, NPqu8=0, NPqd1=0, NPqd8=0, NPledq=0, NPlequ1=0, NPlequ3=0, NPld=0, NPle=0, NPlu=0, NPeu=0, NPed=0

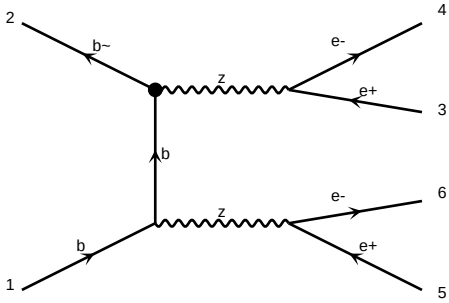

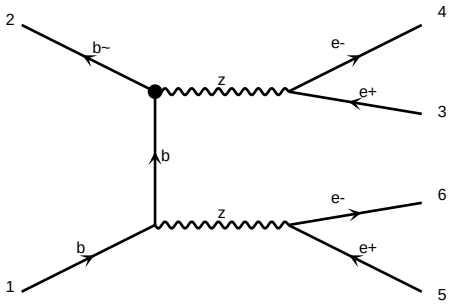

diagram 1432 NP=1, NPcG=0, NPcGtil=0, NPcH=0, NPcHB=0, NPcHDD=0, NPcHW=0, NPcHWB=0, NPcW=0, NPcWtil=0, NPlq1=0, NPlq3=0, NPqe=0, NPqu1=0, NPqu8=0, NPqd1=0, NPqd8=0, NPledq=0, NPlequ1=0, NPlequ3=0, NPld=0, NPle=0, NPlu=0, NPeu=0, NPed=0

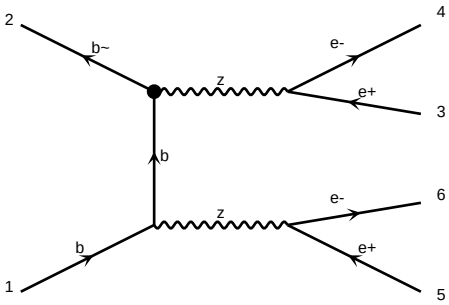

diagram 1433 NP=1, NPcG=0, NPcGtil=0, NPcH=0, NPcHB=0, NPcHDD=0, NPcHW=0, NPcHWB=0, NPcW=0, NPcWtil=0, NPlq1=0, NPlq3=0, NPqe=0, NPqu1=0, NPqu8=0, NPqd1=0, NPqd8=0, NPledq=0, NPlequ1=0, NPlequ3=0, NPld=0, NPle=0, NPlu=0, NPeu=0, NPed=0

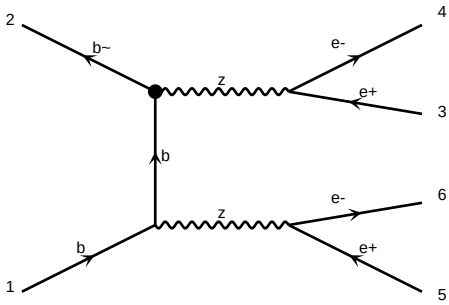

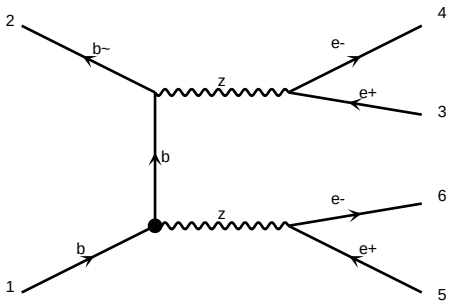

diagram 1435 NP=1, NPcG=0, NPcGtil=0, NPcH=0, NPcHB=0, NPcHDD=0, NPcHW=0, NPcHWB=0, NPcW=0, NPcWtil=0, NPlq1=0, NPlq3=0, NPqe=0, NPqu1=0, NPqu8=0, NPqd1=0, NPqd8=0, NPledq=0, NPlequ1=0, NPlequ3=0, NPld=0, NPle=0, NPlu=0, NPeu=0, NPed=0

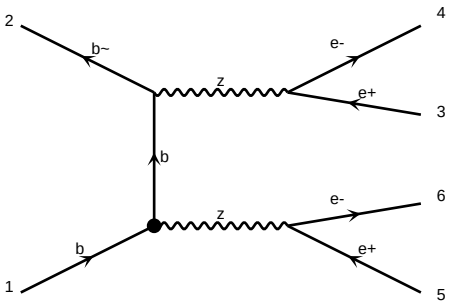

diagram 1436 NP=1, NPcG=0, NPcGtil=0, NPcH=0, NPcHB=0, NPcHDD=0, NPcHW=0, NPcHWB=0, NPcW=0, NPcWtil=0, NPlq1=0, NPlq3=0, NPqe=0, NPqu1=0, NPqu8=0, NPqd1=0, NPqd8=0, NPledq=0, NPlequ1=0, NPlequ3=0, NPld=0, NPle=0, NPlu=0, NPeu=0, NPed=0

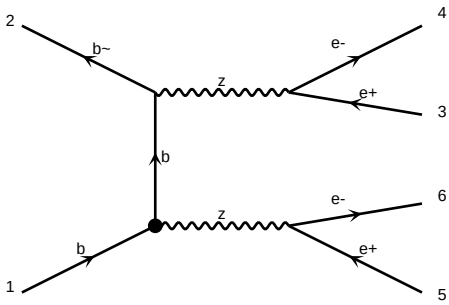

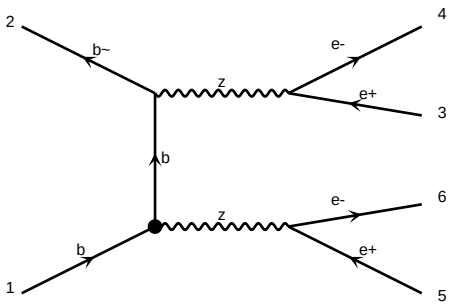

diagram 1438 NP=1, NPcG=0, NPcGtil=0, NPcH=0, NPcHB=0, NPcHDD=0, NPcHW=0, NPcHWB=0, NPcW=0, NPcWtil=0, NPlq1=0, NPlq3=0, NPqe=0, NPqu1=0, NPqu8=0, NPqd1=0, NPqd8=0, NPledq=0, NPlequ1=0, NPlequ3=0, NPld=0, NPle=0, NPlu=0, NPeu=0, NPed=0

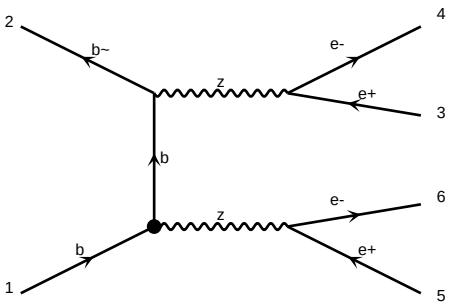

diagram 1439 NP=1, NPcG=0, NPcGtil=0, NPcH=0, NPcHB=0, NPcHDD=0, NPcHW=0, NPcHWB=0, NPcW=0, NPcWtil=0, NPlq1=0, NPlq3=0, NPqe=0, NPqu1=0, NPqu8=0, NPqd1=0, NPqd8=0, NPledq=0, NPlequ1=0, NPlequ3=0, NPld=0, NPle=0, NPlu=0, NPeu=0, NPed=0

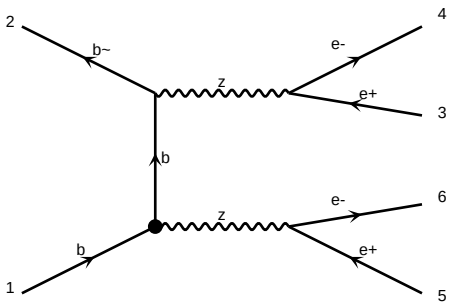

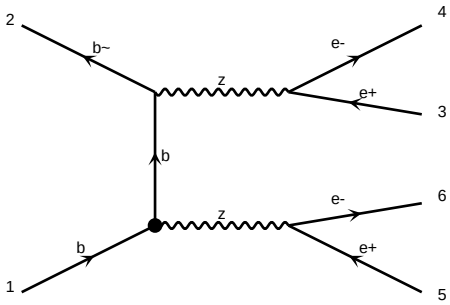

diagram 1441 NP=1, NPcG=0, NPcGtil=0, NPcH=0, NPcHB=0, NPcHDD=0, NPcHW=0, NPcHWB=0, NPcW=0, NPlB=0, NPlH1=0, NPlH2=0, NPlHD=0, NPlHe=0, NPlHl=0, NPlHq1=0, NPlHq3=0, NPlHu=0, NPlW=0, NPlWB=0, NPqG=0, NPqGtil=0, NPqH=0, NPqHB=0, NPqHW=0, NPqHWB=0, NPqW=0, NPuB=0, NPuG=0, NPuH=0, NPuW=0, NPdB=0, NPdG=0, NPdH=0, NPdW=0, NPeB=0, NPeH=0, NPeW=0, NPHl3=0, NPHq3=0, NPll=0, NPlq1=0, NPlq3=0, NPlu=0, NPld=0, NPle=0, NPqq1=0, NPqq3=0, NPqu=0, NPqd=0, NPlequ1=0, NPlequ3=0, NPquqd1=0, NPquqd8=0, NPud=0, NPHud=0, NPlebQ=0, NPleHQ=0, NPlqHe=0, NPlqHl=0, NPlqHq1=0, NPlqHq3=0, NPlqHu=0, NPlqHd=0, NPlqHQ=0, NPlqW=0, NPlqB=0, NPuHe=0, NPuHl=0, NPuHq1=0, NPuHq3=0, NPuHu=0, NPuHd=0, NPuHQ=0, NPuW=0, NPuB=0, NPdHe=0, NPdHl=0, NPdHq1=0, NPdHq3=0, NPdHu=0, NPdHd=0, NPdHQ=0, NPdW=0, NPdB=0, NPeHe=0, NPeHl=0, NPeHq1=0, NPeHq3=0, NPeHu=0, NPeHd=0, NPeHQ=0, NPeW=0, NPeB=0, NPHQ1=0, NPHQ3=0, NPHu=0, NPHd=0, NPHudt=0, NPHe=0, NPHl1=0, NPHl3=0, NPll=0, NPlq1=0, NPlq3=0, NPlu=0, NPld=0, NPle=0, NPqq1=0, NPqq3=0, NPqu=0, NPqd=0, NPlequ1=0, NPlequ3=0, NPquqd1=0, NPquqd8=0, NPud=0, NPHud=0, NPlebQ=0, NPleHQ=0, NPlqHe=0, NPlqHl=0, NPlqHq1=0, NPlqHq3=0, NPlqHu=0, NPlqHd=0, NPlqHQ=0, NPlqW=0, NPlqB=0, NPuHe=0, NPuHl=0, NPuHq1=0, NPuHq3=0, NPuHu=0, NPuHd=0, NPuHQ=0, NPuW=0, NPuB=0, NPdHe=0, NPdHl=0, NPdHq1=0, NPdHq3=0, NPdHu=0, NPdHd=0, NPdHQ=0, NPdW=0, NPdB=0, NPeHe=0, NPeHl=0, NPeHq1=0, NPeHq3=0, NPeHu=0, NPeHd=0, NPeHQ=0, NPeW=0, NPeB=0, NPHQ1=0, NPHQ3=0, NPHu=0, NPHd=0, NPHudt=0, NPHe=0, NPHl1=0, NPHl3=0

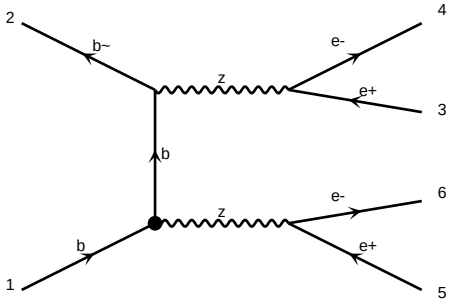

diagram 1444 NP=1, NPcG=0, NPcGtil=0, NPcH=0, NPcHB=0, NPcHDD=0, NPcHW=0, NPcHWB=0, NPcW=0, NPlB=0, NPlH1=0, NPlH2=0, NPlHD=0, NPlHe=0, NPlHl=0, NPlHq1=0, NPlHq3=0, NPlHu=0, NPlW=0, NPlWB=0, NPqG=0, NPqGtil=0, NPqH=0, NPqHB=0, NPqHW=0, NPqHWB=0, NPqW=0, NPuB=0, NPuG=0, NPuH=0, NPuW=0, NPdB=0, NPdG=0, NPdH=0, NPdW=0, NPeB=0, NPeH=0, NPeW=0, NPHl3=0, NPHq3=0, NPll=0, NPlq1=0, NPlq3=0, NPlu=0, NPld=0, NPle=0, NPqq1=0, NPqq3=0, NPqu=0, NPqd=0, NPlequ1=0, NPlequ3=0, NPquqd1=0, NPquqd8=0, NPud=0, NPHud=0, NPlebQ=0, NPleHQ=0, NPlqHe=0, NPlqHl=0, NPlqHq1=0, NPlqHq3=0, NPlqHu=0, NPlqHd=0, NPlqHQ=0, NPlqW=0, NPlqB=0, NPuHe=0, NPuHl=0, NPuHq1=0, NPuHq3=0, NPuHu=0, NPuHd=0, NPuHQ=0, NPuW=0, NPuB=0, NPdHe=0, NPdHl=0, NPdHq1=0, NPdHq3=0, NPdHu=0, NPdHd=0, NPdHQ=0, NPdW=0, NPdB=0, NPeHe=0, NPeHl=0, NPeHq1=0, NPeHq3=0, NPeHu=0, NPeHd=0, NPeHQ=0, NPeW=0, NPeB=0, NPHQ1=0, NPHQ3=0, NPHu=0, NPHd=0, NPHudt=0, NPHe=0, NPHl1=0, NPHl3=0, NPll=0, NPlq1=0, NPlq3=0, NPlu=0, NPld=0, NPle=0, NPqq1=0, NPqq3=0, NPqu=0, NPqd=0, NPlequ1=0, NPlequ3=0, NPquqd1=0, NPquqd8=0, NPud=0, NPHud=0, NPlebQ=0, NPleHQ=0, NPlqHe=0, NPlqHl=0, NPlqHq1=0, NPlqHq3=0, NPlqHu=0, NPlqHd=0, NPlqHQ=0, NPlqW=0, NPlqB=0, NPuHe=0, NPuHl=0, NPuHq1=0, NPuHq3=0, NPuHu=0, NPuHd=0, NPuHQ=0, NPuW=0, NPuB=0, NPdHe=0, NPdHl=0, NPdHq1=0, NPdHq3=0, NPdHu=0, NPdHd=0, NPdHQ=0, NPdW=0, NPdB=0, NPeHe=0, NPeHl=0, NPeHq1=0, NPeHq3=0, NPeHu=0, NPeHd=0, NPeHQ=0, NPeW=0, NPeB=0, NPHQ1=0, NPHQ3=0, NPHu=0, NPHd=0, NPHudt=0, NPHe=0, NPHl1=0, NPHl3=0

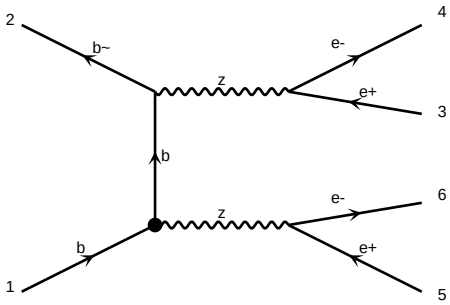

diagram 1447 NP=1, NPcG=0, NPcGtil=0, NPcH=0, NPcHB=0, NPcHDD=0, NPcHW=0, NPcHWB=0, NPcW=0, NPlB=0, NPlH1=0, NPlH2=0, NPlHD=0, NPlHe=0, NPlHl=0, NPlHq1=0, NPlHq3=0, NPlHu=0, NPlW=0, NPlWB=0, NPqG=0, NPqGtil=0, NPqH=0, NPqHB=0, NPqHW=0, NPqHWB=0, NPqW=0, NPuB=0, NPuG=0, NPuH=0, NPuW=0, NPdB=0, NPdG=0, NPdH=0, NPdW=0, NPeB=0, NPeH=0, NPeW=0, NPHl3=0, NPHq3=0, NPll=0, NPlq1=0, NPlq3=0, NPlu=0, NPld=0, NPle=0, NPqq1=0, NPqq3=0, NPqu=0, NPqd=0, NPlequ1=0, NPlequ3=0, NPquqd1=0, NPquqd8=0, NPud=0, NPHud=0, NPlebQ=0, NPleHQ=0, NPlqHe=0, NPlqHl=0, NPlqHq1=0, NPlqHq3=0, NPlqHu=0, NPlqHd=0, NPlqHQ=0, NPlqW=0, NPlqB=0, NPuHe=0, NPuHl=0, NPuHq1=0, NPuHq3=0, NPuHu=0, NPuHd=0, NPuHQ=0, NPuW=0, NPuB=0, NPdHe=0, NPdHl=0, NPdHq1=0, NPdHq3=0, NPdHu=0, NPdHd=0, NPdHQ=0, NPdW=0, NPdB=0, NPeHe=0, NPeHl=0, NPeHq1=0, NPeHq3=0, NPeHu=0, NPeHd=0, NPeHQ=0, NPeW=0, NPeB=0, NPHQ1=0, NPHQ3=0, NPHu=0, NPHd=0, NPHudt=0, NPHe=0, NPHl1=0, NPHl3=0, NPll=0, NPlq1=0, NPlq3=0, NPlu=0, NPld=0, NPle=0, NPqq1=0, NPqq3=0, NPqu=0, NPqd=0, NPlequ1=0, NPlequ3=0, NPquqd1=0, NPquqd8=0, NPud=0, NPHud=0, NPlebQ=0, NPleHQ=0, NPlqHe=0, NPlqHl=0, NPlqHq1=0, NPlqHq3=0, NPlqHu=0, NPlqHd=0, NPlqHQ=0, NPlqW=0, NPlqB=0, NPuHe=0, NPuHl=0, NPuHq1=0, NPuHq3=0, NPuHu=0, NPuHd=0, NPuHQ=0, NPuW=0, NPuB=0, NPdHe=0, NPdHl=0, NPdHq1=0, NPdHq3=0, NPdHu=0, NPdHd=0, NPdHQ=0, NPdW=0, NPdB=0, NPeHe=0, NPeHl=0, NPeHq1=0, NPeHq3=0, NPeHu=0, NPeHd=0, NPeHQ=0, NPeW=0, NPeB=0, NPHQ1=0, NPHQ3=0, NPHu=0, NPHd=0, NPHudt=0, NPHe=0, NPHl1=0, NPHl3=0

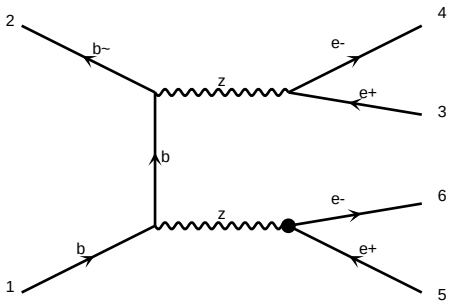

diagram 1450 NP=1, NPcG=0, NPcGtil=0, NPcH=0, NPcHB=0, NPcHDD=0, NPcHW=0, NPcHWB=0, NPcW=0, NPlB=0, NPlH1=0, NPlH2=0, NPlHD=0, NPlHe=0, NPlHl=0, NPlHq1=0, NPlHq3=0, NPlHu=0, NPlW=0, NPlWB=0, NPqG=0, NPqGtil=0, NPqH=0, NPqHB=0, NPqHW=0, NPqHWB=0, NPqW=0, NPuB=0, NPuG=0, NPuH=0, NPuW=0, NPdB=0, NPdG=0, NPdH=0, NPdW=0, NPeB=0, NPeH=0, NPeW=0, NPHl3=0, NPHq3=0, NPll=0, NPlq1=0, NPlq3=0, NPlu=0, NPld=0, NPle=0, NPqq1=0, NPqq3=0, NPqu=0, NPqd=0, NPlequ1=0, NPlequ3=0, NPquqd1=0, NPquqd8=0, NPud=0, NPHud=0, NPlebQ=0, NPleHQ=0, NPlqHe=0, NPlqHl=0, NPlqHq1=0, NPlqHq3=0, NPlqHu=0, NPlqHd=0, NPlqHQ=0, NPlqW=0, NPlqB=0, NPuHe=0, NPuHl=0, NPuHq1=0, NPuHq3=0, NPuHu=0, NPuHd=0, NPuHQ=0, NPuW=0, NPuB=0, NPdHe=0, NPdHl=0, NPdHq1=0, NPdHq3=0, NPdHu=0, NPdHd=0, NPdHQ=0, NPdW=0, NPdB=0, NPeHe=0, NPeHl=0, NPeHq1=0, NPeHq3=0, NPeHu=0, NPeHd=0, NPeHQ=0, NPeW=0, NPeB=0, NPHQ1=0, NPHQ3=0, NPHu=0, NPHd=0, NPHudt=0, NPHe=0, NPHl1=0, NPHl3=0, NPll=0, NPlq1=0, NPlq3=0, NPlu=0, NPld=0, NPle=0, NPqq1=0, NPqq3=0, NPqu=0, NPqd=0, NPlequ1=0, NPlequ3=0, NPquqd1=0, NPquqd8=0, NPud=0, NPHud=0, NPlebQ=0, NPleHQ=0, NPlqHe=0, NPlqHl=0, NPlqHq1=0, NPlqHq3=0, NPlqHu=0, NPlqHd=0, NPlqHQ=0, NPlqW=0, NPlqB=0, NPuHe=0, NPuHl=0, NPuHq1=0, NPuHq3=0, NPuHu=0, NPuHd=0, NPuHQ=0, NPuW=0, NPuB=0, NPdHe=0, NPdHl=0, NPdHq1=0, NPdHq3=0, NPdHu=0, NPdHd=0, NPdHQ=0, NPdW=0, NPdB=0, NPeHe=0, NPeHl=0, NPeHq1=0, NPeHq3=0, NPeHu=0, NPeHd=0, NPeHQ=0, NPeW=0, NPeB=0, NPHQ1=0, NPHQ3=0, NPHu=0, NPHd=0, NPHudt=0, NPHe=0, NPHl1=0, NPHl3=0

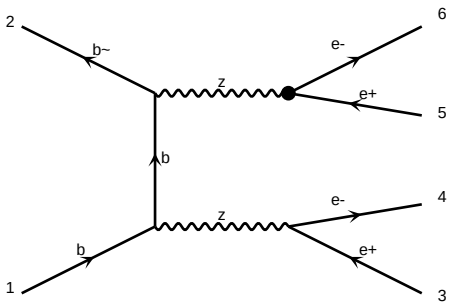

diagram 1453 NP=1, NPcG=0, NPcGtil=0, NPcH=0, NPcHB=0, NPcHDD=0, NPcHW=0, NPcHWB=0, NPcW=0, NPlB=0, NPlH1=0, NPlH2=0, NPlHD=0, NPlHe=0, NPlHl=0, NPlHq1=0, NPlHq3=0, NPlHu=0, NPlW=0, NPlWB=0, NPqG=0, NPqGtil=0, NPqH=0, NPqHB=0, NPqHW=0, NPqHWB=0, NPqW=0, NPuB=0, NPuG=0, NPuH=0, NPuW=0, NPdB=0, NPdG=0, NPdH=0, NPdW=0, NPeB=0, NPeH=0, NPeW=0, NPHl3=0, NPHq3=0, NPll=0, NPlq1=0, NPlq3=0, NPlu=0, NPld=0, NPle=0, NPqq1=0, NPqq3=0, NPqu=0, NPqd=0, NPlequ1=0, NPlequ3=0, NPquqd1=0, NPquqd8=0, NPud=0, NPHud=0, NPlebQ=0, NPleHQ=0, NPlqHe=0, NPlqHl=0, NPlqHq1=0, NPlqHq3=0, NPlqHu=0, NPlqHd=0, NPlqHQ=0, NPlqW=0, NPlqB=0, NPuHe=0, NPuHl=0, NPuHq1=0, NPuHq3=0, NPuHu=0, NPuHd=0, NPuHQ=0, NPuW=0, NPuB=0, NPdHe=0, NPdHl=0, NPdHq1=0, NPdHq3=0, NPdHu=0, NPdHd=0, NPdHQ=0, NPdW=0, NPdB=0, NPeHe=0, NPeHl=0, NPeHq1=0, NPeHq3=0, NPeHu=0, NPeHd=0, NPeHQ=0, NPeW=0, NPeB=0, NPHQ1=0, NPHQ3=0, NPHu=0, NPHd=0, NPHudt=0, NPHe=0, NPHl1=0, NPHl3=0

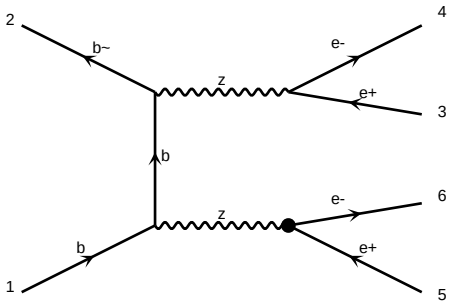

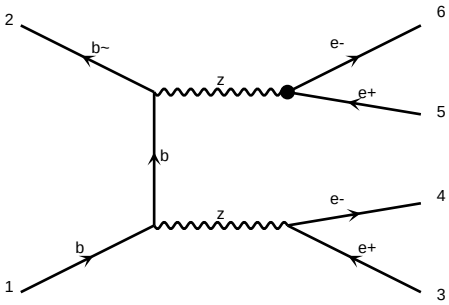

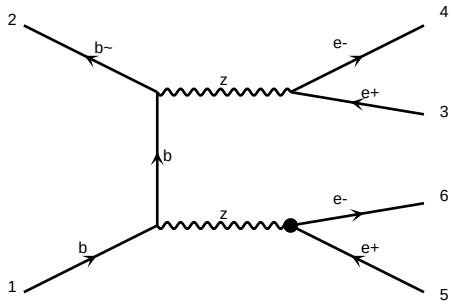

diagram 1456 NP=1, NPcG=0, NPcGtil=0, NPcH=0, NPcHB=0, NPcHDD=0, NPcHW=0, NPcHWB=0, NPcW=0, NPdcHBtil=0, NPdcHDD=0, NPdcHW=0, NPdcHWB=0, NPdcW=0, NPeHDD=0, NPeHWB=0, NPeW=0, NPlHDD=0, NPlHWB=0, NPlW=0, NPqHDD=0, NPqHWB=0, NPqW=0, NPuHDD=0, NPuHWB=0, NPuW=0

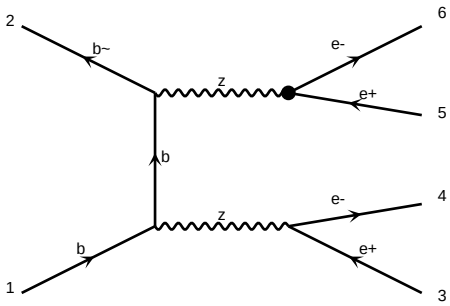

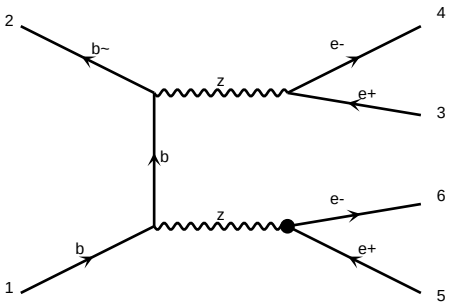

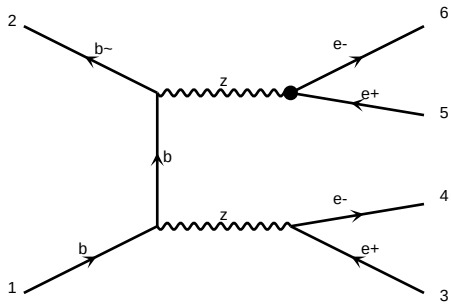

diagram 1459 NP=1, NPcG=0, NPcGtil=0, NPcH=0, NPcHB=0, NPcHDD=0, NPcHW=0, NPcHWB=0, NPcW=0, NPdcHBtil=0, NPdcHDD=0, NPdcHW=0, NPdcHWB=0, NPdcW=0, NPeHDD=0, NPeHWB=0, NPeW=0, NPlHDD=0, NPlHWB=0, NPlW=0, NPqHDD=0, NPqHWB=0, NPqW=0, NPuHDD=0, NPuHWB=0, NPuW=0

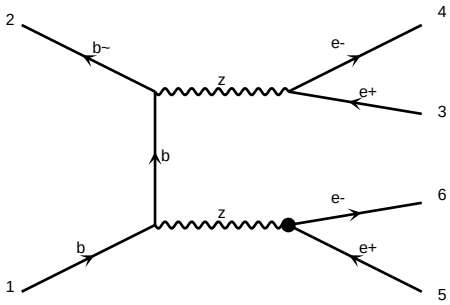

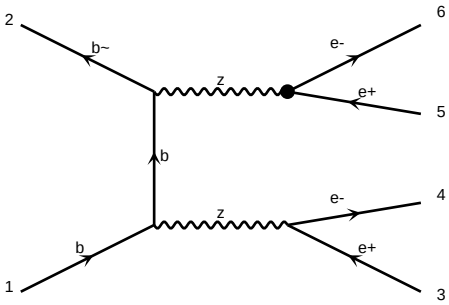

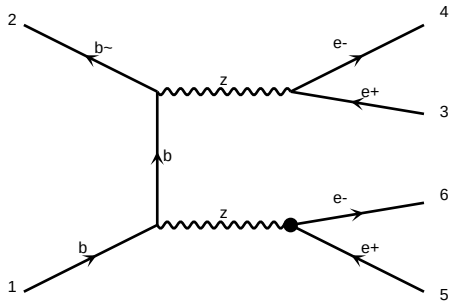

diagram 1462 NP=1, NPcG=0, NPcGtil=0, NPcH=0, NPcHB=0, NPcHDD=0, NPcHW=0, NPcHWB=0, NPcW=0, NPdcHBtil=0, NPdcHDD=0, NPdcHW=0, NPdcHWB=0, NPdcW=0, NPeHDD=0, NPeHWB=0, NPeW=0, NPlHDD=0, NPlHWB=0, NPlW=0, NPqHDD=0, NPqHWB=0, NPqW=0, NPuHDD=0, NPuHWB=0, NPuW=0

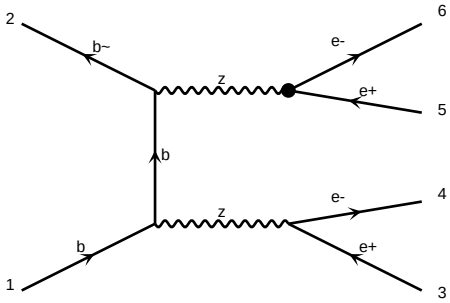

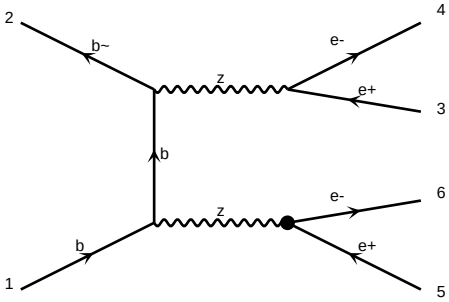

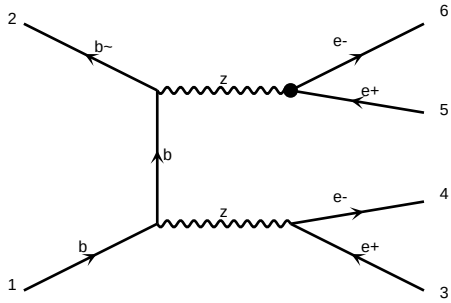

diagram 1465 NP=1, NPcG=0, NPcGtil=0, NPcH=0, NPcHB=0, NPcHDD=0, NPcHW=0, NPcHWB=0, NPcW=0, NPdcHBtil=0, NPdcHDD=0, NPdcHW=0, NPdcHWB=0, NPdcW=0, NPeHDD=0, NPeHWB=0, NPeW=0, NPlHDD=0, NPlHWB=0, NPlW=0, NPqHDD=0, NPqHWB=0, NPqW=0, NPuHDD=0, NPuHWB=0, NPuW=0

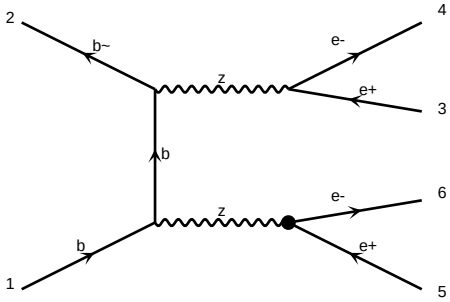

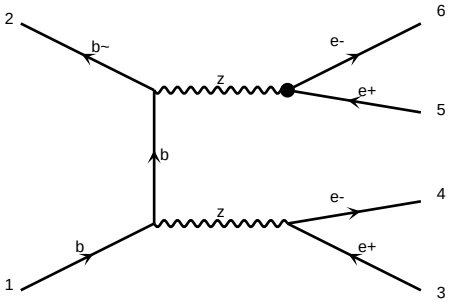

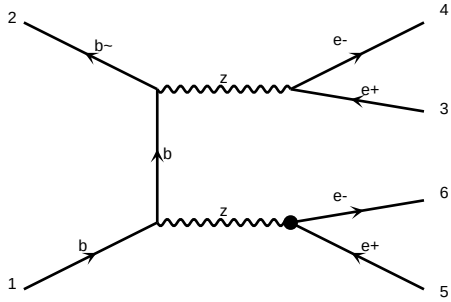

diagram 1468 NP=1, NPcG=0, NPcGtil=0, NPcH=0, NPcHB=0, NPcHDD=0, NPcHW=0, NPcHWB=0, NPcW=0, NPdcHBtil=0, NPdcHDD=0, NPdcHW=0, NPdcHWB=0, NPdcW=0, NPeHDD=0, NPeHWB=0, NPeW=0, NPlHDD=0, NPlHWB=0, NPlW=0, NPqHDD=0, NPqHWB=0, NPqW=0, NPuHDD=0, NPuHWB=0, NPuW=0

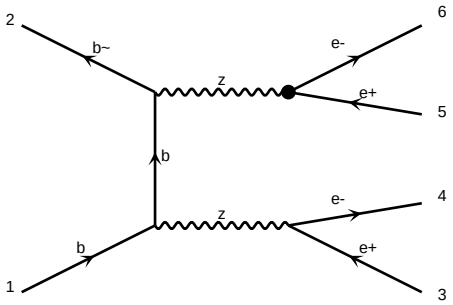

diagram 1471 NP=1, NPcG=0, NPcGtil=0, NPcH=0, NPcHB=0, NPcHDD=0, NPcHW=0, NPcHWB=0, NPcW=0, NPdcHBtil=0, NPdcHWtil=0, NPeHD=0, NPeHW=0, NPeHWB=0, NPeW=0, NPlHQ3=0, NPlHQ=0, NPlebQ=0, NPlequ1=0, NPlequ3=0, NPlu=0, NPqHQ3=0, NPqHQ=0, NPqW=0, NPquHQ=0, NPquqd1=0, NPquqd8=0, NPqu=0, NPqd=0, NPqe=0, NPuHQ=0, NPuW=0, NPud1=0, NPud8=0, NPuu=0, NPed=0, NPeu=0, NPee=0, NPld=0, NPle=0, NPlu=0, NPqd=0, NPqe=0, NPqu

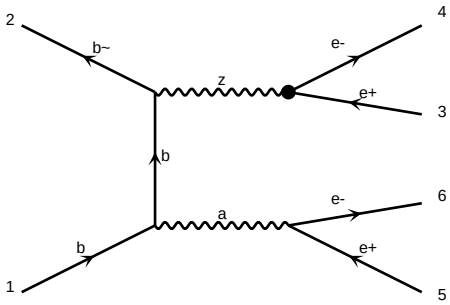

diagram 1486 NP=1, NPcG=0, NPcGtil=0, NPcH=0, NPcHB=0, NPcHDD=0, NPcHW=0, NPcHWB=0, NPcW=0, NPlq1=0, NPlq3=0, NPqe=0, NPqu1=0, NPqu8=0, NPqd1=0, NPqd8=0, NPlu=0, NPld=0, NPle=0, NPeu=0, NPed=0, NPlebQ=0, NPquqd1=0, NPquqd8=0, NPlequ1=0, NPlequ3=0, NPllet=0, NPqqle=0, NPqqlu=0, NPqqqd=0, NPllqq1=0, NPllqq3=0, NPlltt=0, NPtt1=0, NPQQ1=0, NPQQ8=0, NPQt1=0, NPQt8=0, NPtu1=0, NPtu8=0, NPtd1=0, NPtd8=0, NPQlM1=0, NPQlM8=0, NPtG=0, NPtW=0, NPtB=0, NPbW=0, NPbG=0, NPbB=0, NPbH=0, NPtH=0, NPtBtil=0, NPtWtil=0, NPbWtil=0, NPbBtil=0, NPbGtil=0, NPtHtil=0, NPtGtil=0, NPHG=0, NPHW=0, NPHB=0, NPHWB=0, NPHDD=0, NPHbox=0, NPHl1=0, NPHl3=0, NPHe=0, NPHQ1=0, NPHQ3=0, NPHu=0, NPHd=0, NPHud=0, NPll1=0, NPlq1=0, NPlq3=0, NPqe=0, NPqu1=0, NPqu8=0, NPqd1=0, NPqd8=0, NPlu=0, NPld=0, NPle=0, NPeu=0, NPed=0, NPlebQ=0, NPquqd1=0, NPquqd8=0, NPlequ1=0, NPlequ3=0, NPllet=0, NPqqle=0, NPqqlu=0, NPqqqd=0, NPllqq1=0, NPllqq3=0, NPlltt=0, NPtt1=0, NPQQ1=0, NPQQ8=0, NPQt1=0, NPQt8=0, NPtu1=0, NPtu8=0, NPtd1=0, NPtd8=0, NPQlM1=0, NPQlM8=0, NPtG=0, NPtW=0, NPtB=0, NPbW=0, NPbG=0, NPbB=0, NPbH=0, NPtH=0, NPtBtil=0, NPtWtil=0, NPbWtil=0, NPbBtil=0, NPbGtil=0, NPtHtil=0, NPtGtil=0, NPHG=0, NPHW=0, NPHB=0, NPHWB=0, NPHDD=0, NPHbox=0, NPHl1=0, NPHl3=0, NPHe=0, NPHQ1=0, NPHQ3=0, NPHu=0, NPHd=0, NPHud=0, NPll1=0

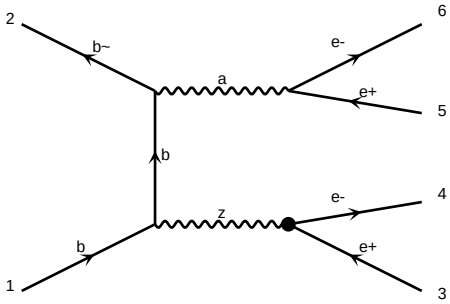

diagram 1489 NP=1, NPcG=0, NPcGtil=0, NPcH=0, NPcHB=0, NPcHDD=0, NPcHW=0, NPcHWB=0, NPcW=0, NPlq1=0, NPlq3=0, NPqe=0, NPqu1=0, NPqu8=0, NPqd1=0, NPqd8=0, NPlu=0, NPld=0, NPle=0, NPeu=0, NPed=0, NPlebQ=0, NPquqd1=0, NPquqd8=0, NPlequ1=0, NPlequ3=0, NPllet=0, NPqqle=0, NPqqlu=0, NPqqqd=0, NPllqq1=0, NPllqq3=0, NPlltt=0, NPtt1=0, NPQQ1=0, NPQQ8=0, NPQt1=0, NPQt8=0, NPtu1=0, NPtu8=0, NPtd1=0, NPtd8=0, NPQlM1=0, NPQlM8=0, NPtG=0, NPtW=0, NPtB=0, NPbW=0, NPbG=0, NPbB=0, NPbH=0, NPtH=0, NPtBtil=0, NPtWtil=0, NPbWtil=0, NPbBtil=0, NPbGtil=0, NPtHtil=0, NPtGtil=0, NPHG=0, NPHW=0, NPHB=0, NPHWB=0, NPHDD=0, NPHbox=0, NPHl1=0, NPHl3=0, NPHe=0, NPHQ1=0, NPHQ3=0, NPHu=0, NPHd=0, NPHud=0, NPll1=0, NPlq1=0, NPlq3=0, NPqe=0, NPqu1=0, NPqu8=0, NPqd1=0, NPqd8=0, NPlu=0, NPld=0, NPle=0, NPeu=0, NPed=0, NPlebQ=0, NPquqd1=0, NPquqd8=0, NPlequ1=0, NPlequ3=0, NPllet=0, NPqqle=0, NPqqlu=0, NPqqqd=0, NPllqq1=0, NPllqq3=0, NPlltt=0, NPtt1=0, NPQQ1=0, NPQQ8=0, NPQt1=0, NPQt8=0, NPtu1=0, NPtu8=0, NPtd1=0, NPtd8=0, NPQlM1=0, NPQlM8=0, NPtG=0, NPtW=0, NPtB=0, NPbW=0, NPbG=0, NPbB=0, NPbH=0, NPtH=0, NPtBtil=0, NPtWtil=0, NPbWtil=0, NPbBtil=0, NPbGtil=0, NPtHtil=0, NPtGtil=0, NPHG=0, NPHW=0, NPHB=0, NPHWB=0, NPHDD=0, NPHbox=0, NPHl1=0, NPHl3=0, NPHe=0, NPHQ1=0, NPHQ3=0, NPHu=0, NPHd=0, NPHud=0, NPll1=0

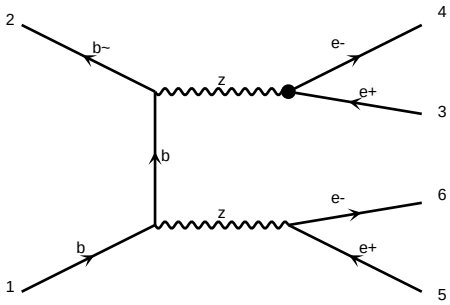

diagram 1492 NP=1, NPcG=0, NPcGtil=0, NPcH=0, NPcHB=0, NPcHDD=0, NPcHW=0, NPcHWB=0, NPcW=0, NPlq1=0, NPlq3=0, NPqe=0, NPqu1=0, NPqu8=0, NPqd1=0, NPqd8=0, NPlu=0, NPld=0, NPle=0, NPeu=0, NPed=0, NPlebQ=0, NPquqd1=0, NPquqd8=0, NPlequ1=0, NPlequ3=0, NPllet=0, NPqqle=0, NPqqlu=0, NPqqqd=0, NPllqq1=0, NPllqq3=0, NPlltt=0, NPtt1=0, NPQQ1=0, NPQQ8=0, NPQt1=0, NPQt8=0, NPtu1=0, NPtu8=0, NPtd1=0, NPtd8=0, NPQlM1=0, NPQlM8=0, NPtG=0, NPtW=0, NPtB=0, NPbW=0, NPbG=0, NPbB=0, NPbH=0, NPtH=0, NPtBtil=0, NPtWtil=0, NPbWtil=0, NPbBtil=0, NPbGtil=0, NPtHtil=0, NPtGtil=0, NPHG=0, NPHW=0, NPHB=0, NPHWB=0, NPHDD=0, NPHbox=0, NPHl1=0, NPHl3=0, NPHe=0, NPHQ1=0, NPHQ3=0, NPHu=0, NPHd=0, NPHud=0, NPll1=0, NPlq1=0, NPlq3=0, NPqe=0, NPqu1=0, NPqu8=0, NPqd1=0, NPqd8=0, NPlu=0, NPld=0, NPle=0, NPeu=0, NPed=0, NPlebQ=0, NPquqd1=0, NPquqd8=0, NPlequ1=0, NPlequ3=0, NPllet=0, NPqqle=0, NPqqlu=0, NPqqqd=0, NPllqq1=0, NPllqq3=0, NPlltt=0, NPtt1=0, NPQQ1=0, NPQQ8=0, NPQt1=0, NPQt8=0, NPtu1=0, NPtu8=0, NPtd1=0, NPtd8=0, NPQlM1=0, NPQlM8=0, NPtG=0, NPtW=0, NPtB=0, NPbW=0, NPbG=0, NPbB=0, NPbH=0, NPtH=0, NPtBtil=0, NPtWtil=0, NPbWtil=0, NPbBtil=0, NPbGtil=0, NPtHtil=0, NPtGtil=0, NPHG=0, NPHW=0, NPHB=0, NPHWB=0, NPHDD=0, NPHbox=0, NPHl1=0, NPHl3=0, NPHe=0, NPHQ1=0, NPHQ3=0, NPHu=0, NPHd=0, NPHud=0, NPll1=0

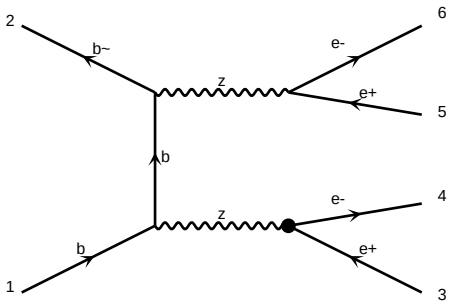

diagram 1495 NP=1, NPcG=0, NPcGtil=0, NPcH=0, NPcHB=0, NPcHDD=0, NPcHW=0, NPcHWB=0, NPcW=0, NPlq1=0, NPlq3=0, NPqe=0, NPqu1=0, NPqu8=0, NPqd1=0, NPqd8=0, NPlu=0, NPld=0, NPle=0, NPeu=0, NPed=0, NPlebQ=0, NPquqd1=0, NPquqd8=0, NPlequ1=0, NPlequ3=0, NPllet=0, NPqqle=0, NPqqlu=0, NPqqqd=0, NPllqq1=0, NPllqq3=0, NPlltt=0, NPtt1=0, NPQQ1=0, NPQQ8=0, NPQt1=0, NPQt8=0, NPtu1=0, NPtu8=0, NPtd1=0, NPtd8=0, NPQlM1=0, NPQlM8=0, NPtG=0, NPtW=0, NPtB=0, NPbW=0, NPbG=0, NPbB=0, NPbH=0, NPtH=0, NPtBtil=0, NPtWtil=0, NPbWtil=0, NPbBtil=0, NPbGtil=0, NPtHtil=0, NPtGtil=0, NPHG=0, NPHW=0, NPHB=0, NPHWB=0, NPHDD=0, NPHbox=0, NPHl1=0, NPHl3=0, NPHe=0, NPHQ1=0, NPHQ3=0, NPHu=0, NPHd=0, NPHud=0, NPll1=0, NPlq1=0, NPlq3=0, NPqe=0, NPqu1=0, NPqu8=0, NPqd1=0, NPqd8=0, NPlu=0, NPld=0, NPle=0, NPeu=0, NPed=0, NPlebQ=0, NPquqd1=0, NPquqd8=0, NPlequ1=0, NPlequ3=0, NPllet=0, NPqqle=0, NPqqlu=0, NPqqqd=0, NPllqq1=0, NPllqq3=0, NPlltt=0, NPtt1=0, NPQQ1=0, NPQQ8=0, NPQt1=0, NPQt8=0, NPtu1=0, NPtu8=0, NPtd1=0, NPtd8=0, NPQlM1=0, NPQlM8=0, NPtG=0, NPtW=0, NPtB=0, NPbW=0, NPbG=0, NPbB=0, NPbH=0, NPtH=0, NPtBtil=0, NPtWtil=0, NPbWtil=0, NPbBtil=0, NPbGtil=0, NPtHtil=0, NPtGtil=0, NPHG=0, NPHW=0, NPHB=0, NPHWB=0, NPHDD=0, NPHbox=0, NPHl1=0, NPHl3=0, NPHe=0, NPHQ1=0, NPHQ3=0, NPHu=0, NPHd=0, NPHud=0, NPll1=0

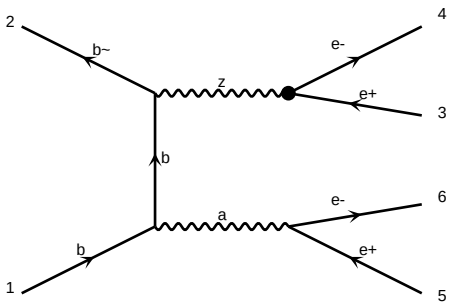

diagram 1498 NP=1, NPcG=0, NPcGtil=0, NPcH=0, NPcHB=0, NPcHDD=0, NPcHW=0, NPcHWB=0, NPcW=0, NPlq1=0, NPlq3=0, NPqe=0, NPqu1=0, NPqu8=0, NPqd1=0, NPqd8=0, NPlu=0, NPld=0, NPle=0, NPeu=0, NPed=0, NPlebQ=0, NPquqd1=0, NPquqd8=0, NPlequ1=0, NPlequ3=0, NPllet=0, NPqqle=0, NPqqlu=0, NPqqqd=0, NPllqq1=0, NPllqq3=0, NPlltt=0, NPtt1=0, NPQQ1=0, NPQQ8=0, NPQt1=0, NPQt8=0, NPtu1=0, NPtu8=0, NPtd1=0, NPtd8=0, NPQlM1=0, NPQlM8=0, NPtG=0, NPtW=0, NPtB=0, NPbW=0, NPbG=0, NPbB=0, NPbH=0, NPtH=0, NPtBtil=0, NPtWtil=0, NPbWtil=0, NPbBtil=0, NPbGtil=0, NPtHtil=0, NPtGtil=0, NPHG=0, NPHW=0, NPHB=0, NPHWB=0, NPHDD=0, NPHbox=0, NPHl1=0, NPHl3=0, NPHe=0, NPHQ1=0, NPHQ3=0, NPHu=0, NPHd=0, NPHud=0, NPll1=0, NPlq1=0, NPlq3=0, NPqe=0, NPqu1=0, NPqu8=0, NPqd1=0, NPqd8=0, NPlu=0, NPld=0, NPle=0, NPeu=0, NPed=0, NPlebQ=0, NPquqd1=0, NPquqd8=0, NPlequ1=0, NPlequ3=0, NPllet=0, NPqqle=0, NPqqlu=0, NPqqqd=0, NPllqq1=0, NPllqq3=0, NPlltt=0, NPtt1=0, NPQQ1=0, NPQQ8=0, NPQt1=0, NPQt8=0, NPtu1=0, NPtu8=0, NPtd1=0, NPtd8=0, NPQlM1=0, NPQlM8=0, NPtG=0, NPtW=0, NPtB=0, NPbW=0, NPbG=0, NPbB=0, NPbH=0, NPtH=0, NPtBtil=0, NPtWtil=0, NPbWtil=0, NPbBtil=0, NPbGtil=0, NPtHtil=0, NPtGtil=0, NPHG=0, NPHW=0, NPHB=0, NPHWB=0, NPHDD=0, NPHbox=0, NPHl1=0, NPHl3=0, NPHe=0, NPHQ1=0, NPHQ3=0, NPHu=0, NPHd=0, NPHud=0, NPll1=0

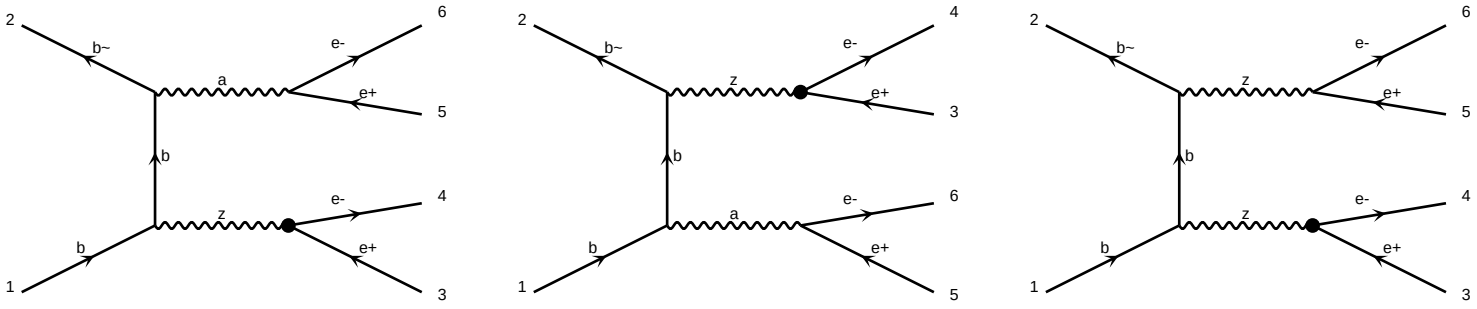

diagram 1501 NP=1, NPcG=0, NPcGtil=0, NPcH=0, NPcHB=0, NPcHDD=0, NPcHW=0, NPcHWB=0, NPcW=0, NPdcHBtil=0, NPdcHWtil=0, NPeHRe=0, NPeHWRe=0, NPeWRe=0, NPlHRe=0, NPlHWRe=0, NPlWRe=0, NPqHRe=0, NPqHWRe=0, NPqWRe=0, NPuHRe=0, NPuWRe=0

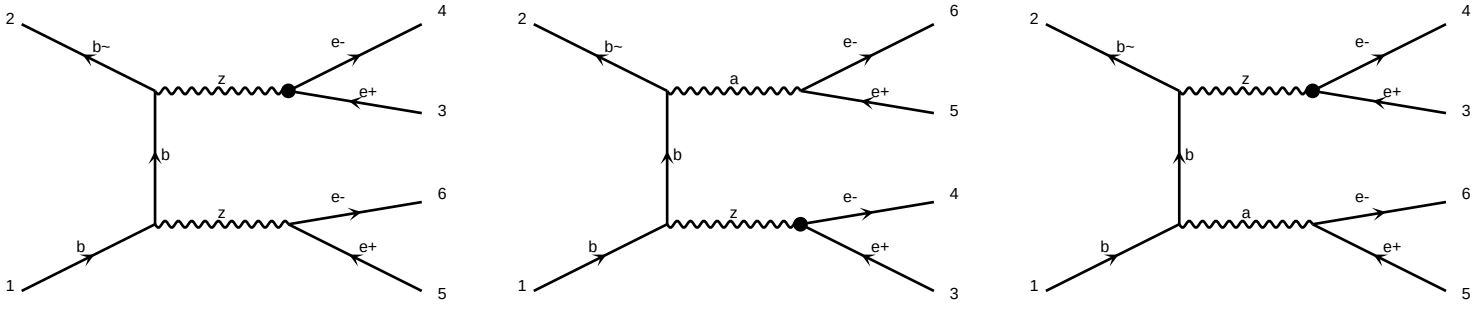

diagram 1504 NP=1, NPcG=0, NPcGtil=0, NPcH=0, NPcHB=0, NPcHDD=0, NPcHW=0, NPcHWB=0, NPcW=0, NPdcHBtil=0, NPdcHWtil=0, NPeHRe=0, NPeHWRe=0, NPeWRe=0, NPlHRe=0, NPlHWRe=0, NPlWRe=0, NPqHRe=0, NPqHWRe=0, NPqWRe=0, NPuHRe=0, NPuWRe=0

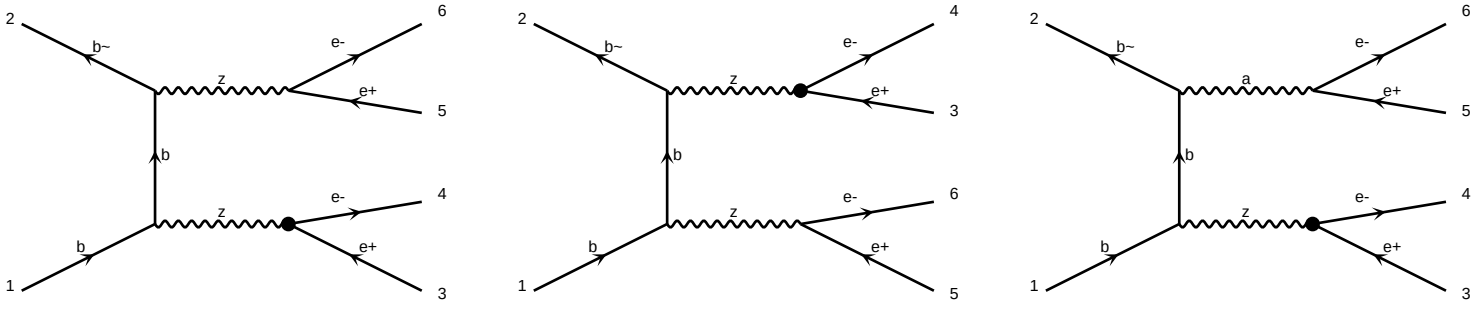

diagram 1507 NP=1, NPcG=0, NPcGtil=0, NPcH=0, NPcHB=0, NPcHDD=0, NPcHW=0, NPcHWB=0, NPcW=0, NPdcHBtil=0, NPdcHWtil=0, NPeHRe=0, NPeHWRe=0, NPeWRe=0, NPlHRe=0, NPlHWRe=0, NPlWRe=0, NPqHRe=0, NPqHWRe=0, NPqWRe=0, NPuHRe=0, NPuWRe=0

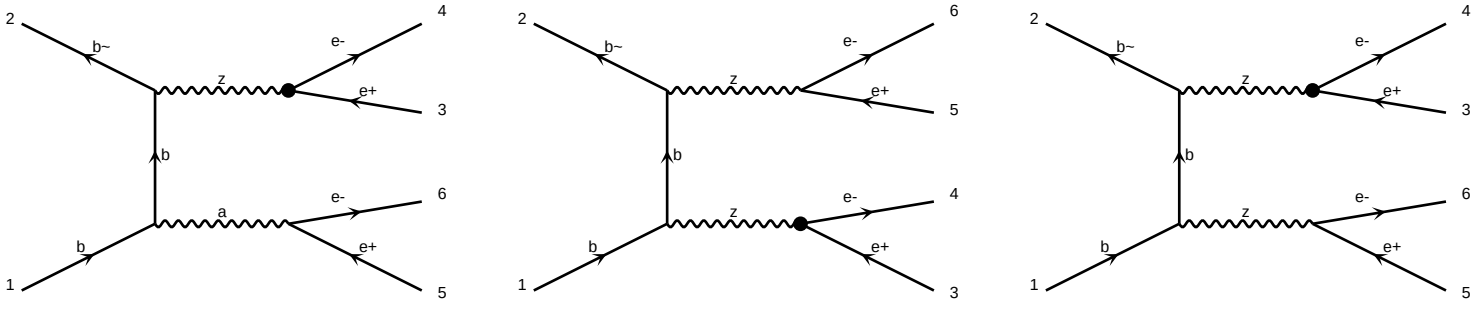

diagram 1510 NP=1, NPcG=0, NPcGtil=0, NPcH=0, NPcHB=0, NPcHDD=0, NPcHW=0, NPcHWB=0, NPcW=0, NPdcHBtil=0, NPdcHWtil=0, NPeHRe=0, NPeHWRe=0, NPeWRe=0, NPlHRe=0, NPlHWRe=0, NPlWRe=0, NPqHRe=0, NPqHWRe=0, NPqWRe=0, NPuHRe=0, NPuWRe=0

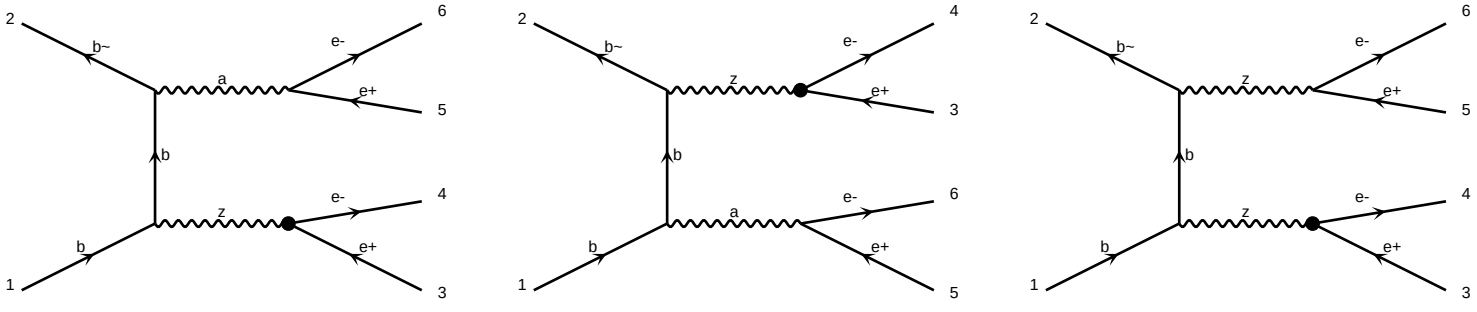

diagram 1513 NP=1, NPcG=0, NPcGtil=0, NPcH=0, NPcHB=0, NPcHDD=0, NPcHW=0, NPcHWB=0, NPcW=0, NPdcHBtil=0, NPdcHWtil=0, NPeHRe=0, NPeHWRe=0, NPeWRe=0, NPlHRe=0, NPlHWRe=0, NPlWRe=0, NPqHRe=0, NPqHWRe=0, NPqWRe=0, NPuHRe=0, NPuWRe=0

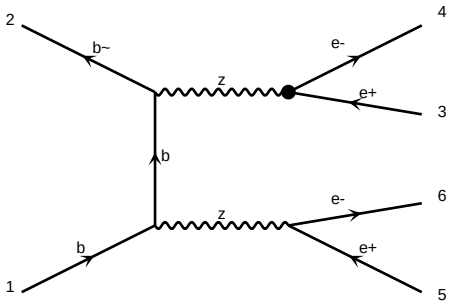

diagram 1516 NP=1, NPcG=0, NPcGtil=0, NPcH=0, NPcHB=0, NPcHDD=0, NPcHW=0, NPcHWB=0, NPcW=0, NPlB=0, NPlH=0, NPlHD=0, NPlHe=0, NPlHl=0, NPlHq=0, NPlHu=0, NPlW=0, NPlWB=0, NPlWe=0, NPlWl=0, NPlWq=0, NPqG=0, NPqH=0, NPqHD=0, NPqHu=0, NPqW=0, NPuG=0, NPuH=0, NPuW=0, QCD=0, QED=4, WEIGHTED=4

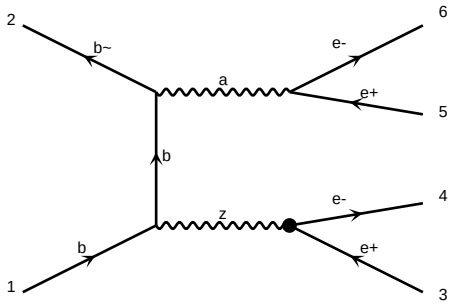

diagram 1517 NP=1, NPcG=0, NPcGtil=0, NPcH=0, NPcHB=0, NPcHDD=0, NPcHW=0, NPcHWB=0, NPcW=0, NPlB=0, NPlH=0, NPlHD=0, NPlHe=0, NPlHl=0, NPlHq=0, NPlHu=0, NPlW=0, NPlWB=0, NPlWe=0, NPlWl=0, NPlWq=0, NPqG=0, NPqH=0, NPqHD=0, NPqHu=0, NPqW=0, NPuG=0, NPuH=0, NPuW=0, QCD=0, QED=4, WEIGHTED=4

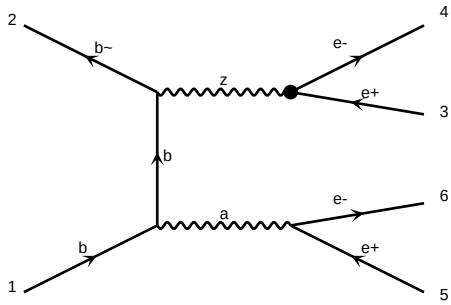

diagram 1518 NP=1, NPcG=0, NPcGtil=0, NPcH=0, NPcHB=0, NPcHDD=0, NPcHW=0, NPcHWB=0, NPcW=0, NPlB=0, NPlH=0, NPlHD=0, NPlHe=0, NPlHl=0, NPlHq=0, NPlHu=0, NPlW=0, NPlWB=0, NPlWe=0, NPlWl=0, NPlWq=0, NPqG=0, NPqH=0, NPqHD=0, NPqHu=0, NPqW=0, NPuG=0, NPuH=0, NPuW=0, QCD=0, QED=4, WEIGHTED=4

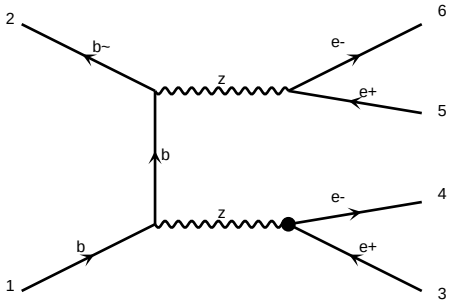

diagram 1519 NP=1, NPcG=0, NPcGtil=0, NPcH=0, NPcHB=0, NPcHDD=0, NPcHW=0, NPcHWB=0, NPcW=0, NPlB=0, NPlH=0, NPlHD=0, NPlHe=0, NPlHl=0, NPlHq=0, NPlHu=0, NPlW=0, NPlWB=0, NPlWe=0, NPlWl=0, NPlWq=0, NPqG=0, NPqH=0, NPqHD=0, NPqHu=0, NPqW=0, NPuG=0, NPuH=0, NPuW=0, QCD=0, QED=4, WEIGHTED=4

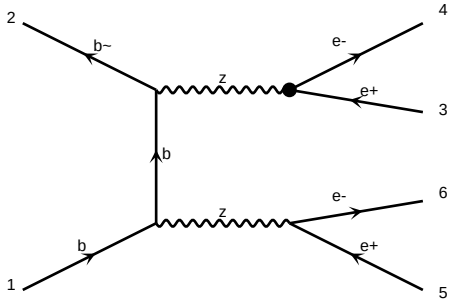

diagram 1520 NP=1, NPcG=0, NPcGtil=0, NPcH=0, NPcHB=0, NPcHDD=0, NPcHW=0, NPcHWB=0, NPcW=0, NPlB=0, NPlH=0, NPlHD=0, NPlHe=0, NPlHl=0, NPlHq=0, NPlHu=0, NPlW=0, NPlWB=0, NPlWe=0, NPlWl=0, NPlWq=0, NPqG=0, NPqH=0, NPqHD=0, NPqHu=0, NPqW=0, NPuG=0, NPuH=0, NPuW=0, QCD=0, QED=4, WEIGHTED=4

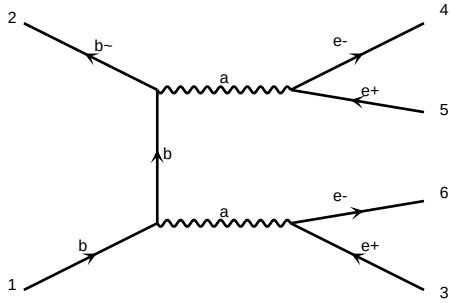

diagram 1521 NP=1, NPcG=0, NPcGtil=0, NPcH=0, NPcHB=0, NPcHDD=0, NPcHW=0, NPcHWB=0, NPcW=0, NPlB=0, NPlH=0, NPlHD=0, NPlHe=0, NPlHl=0, NPlHq=0, NPlHu=0, NPlW=0, NPlWB=0, NPlWe=0, NPlWl=0, NPlWq=0, NPqG=0, NPqH=0, NPqHD=0, NPqHu=0, NPqW=0, NPuG=0, NPuH=0, NPuW=0, QCD=0, QED=4, WEIGHTED=4

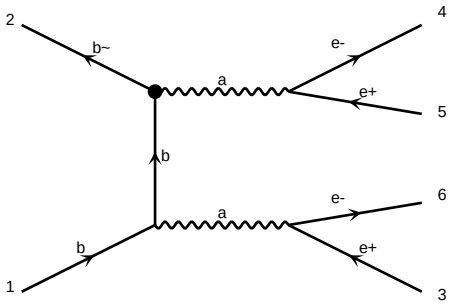

diagram 1522 NP=1, NPcG=0, NPcGtil=0, NPcH=0, NPcHB=0, NPcHDD=0, NPcHW=0, NPcHWB=0, NPcW=0, NPlB=0, NPlH=0, NPlHD=0, NPlHe=0, NPlHl=0, NPlHq=0, NPlHu=0, NPlW=0, NPlWB=0, NPlWe=0, NPlWl=0, NPlWq=0, NPqG=0, NPqH=0, NPqHD=0, NPqHu=0, NPqW=0, NPuG=0, NPuH=0, NPuW=0, QCD=0, QED=4, WEIGHTED=4

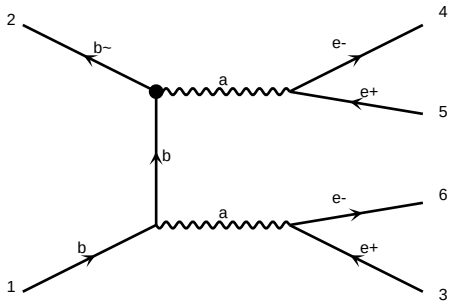

diagram 1523 NP=1, NPcG=0, NPcGtil=0, NPcH=0, NPcHB=0, NPcHDD=0, NPcHW=0, NPcHWB=0, NPcW=0, NPlB=0, NPlH=0, NPlHD=0, NPlHe=0, NPlHl=0, NPlHq=0, NPlHu=0, NPlW=0, NPlWB=0, NPlWe=0, NPlWl=0, NPlWq=0, NPqG=0, NPqH=0, NPqHD=0, NPqHu=0, NPqW=0, NPuG=0, NPuH=0, NPuW=0, QCD=0, QED=4, WEIGHTED=4

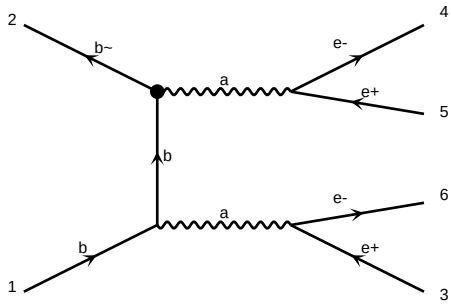

diagram 1524 NP=1, NPcG=0, NPcGtil=0, NPcH=0, NPcHB=0, NPcHDD=0, NPcHW=0, NPcHWB=0, NPcW=0, NPlB=0, NPlH=0, NPlHD=0, NPlHe=0, NPlHl=0, NPlHq=0, NPlHu=0, NPlW=0, NPlWB=0, NPlWe=0, NPlWl=0, NPlWq=0, NPqG=0, NPqH=0, NPqHD=0, NPqHu=0, NPqW=0, NPuG=0, NPuH=0, NPuW=0, QCD=0, QED=4, WEIGHTED=4

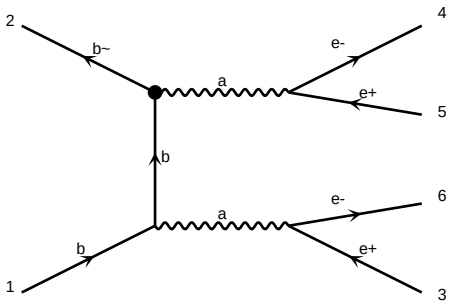

diagram 1525 NP=1, NPcG=0, NPcGtil=0, NPcH=0, NPcHB=0, NPcHDD=0, NPcHW=0, NPcHWB=0, NPcW=0, NPlB=0, NPlH=0, NPlHD=0, NPlHe=0, NPlHl=0, NPlHq=0, NPlHu=0, NPlW=0, NPlWB=0, NPlWe=0, NPlWl=0, NPlWq=0, NPqG=0, NPqH=0, NPqHD=0, NPqHu=0, NPqW=0, NPuG=0, NPuH=0, NPuW=0, QCD=0, QED=4, WEIGHTED=4

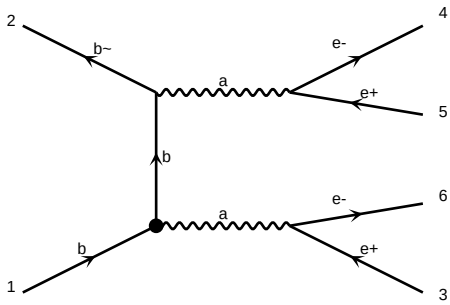

diagram 1526 NP=1, NPcG=0, NPcGtil=0, NPcH=0, NPcHB=0, NPcHDD=0, NPcHW=0, NPcHWB=0, NPcW=0, NPlB=0, NPlH=0, NPlHD=0, NPlHe=0, NPlHl=0, NPlHq=0, NPlHu=0, NPlW=0, NPlWB=0, NPlWe=0, NPlWl=0, NPlWq=0, NPqG=0, NPqH=0, NPqHD=0, NPqHu=0, NPqW=0, NPuG=0, NPuH=0, NPuW=0, QCD=0, QED=4, WEIGHTED=4

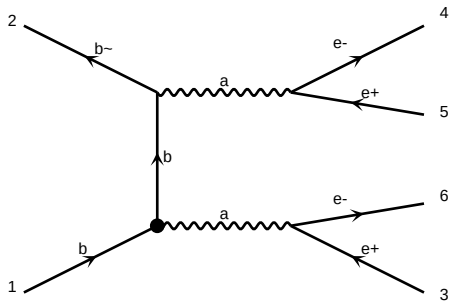

diagram 1527 NP=1, NPcG=0, NPcGtil=0, NPcH=0, NPcHB=0, NPcHDD=0, NPcHW=0, NPcHWB=0, NPcW=0, NPlB=0, NPlH=0, NPlHD=0, NPlHe=0, NPlHl=0, NPlHq=0, NPlHu=0, NPlW=0, NPlWB=0, NPlWe=0, NPlWl=0, NPlWq=0, NPqG=0, NPqH=0, NPqHD=0, NPqHu=0, NPqW=0, NPuG=0, NPuH=0, NPuW=0, QCD=0, QED=4, WEIGHTED=4

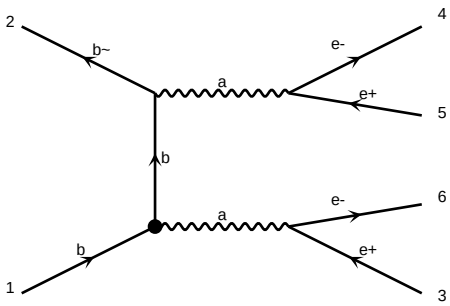

diagram 1528 NP=1, NPcG=0, NPcGtil=0, NPcH=0, NPcHB=0, NPcHDD=0, NPcHW=0, NPcHWB=0, NPcW=0, NPlB=0, NPlH=0, NPlHD=0, NPlHe=0, NPlHl=0, NPlHq=0, NPlHu=0, NPlW=0, NPlWB=0, NPlWe=0, NPlWl=0, NPlWq=0, NPqG=0, NPqH=0, NPqHD=0, NPqHu=0, NPqW=0, NPuG=0, NPuH=0, NPuW=0, QCD=0, QED=4, WEIGHTED=4

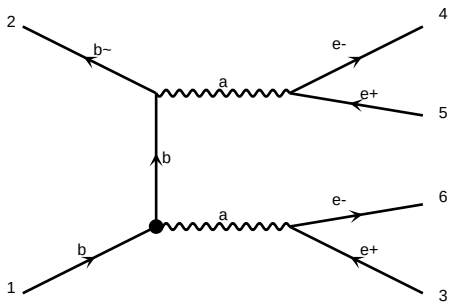

diagram 1529 NP=1, NPcG=0, NPcGtil=0, NPcH=0, NPcHB=0, NPcHDD=0, NPcHW=0, NPcHWB=0, NPcW=0, NPlB=0, NPlH=0, NPlHD=0, NPlHe=0, NPlHl=0, NPlHq=0, NPlHu=0, NPlW=0, NPlWB=0, NPlWe=0, NPlWl=0, NPlWq=0, NPqG=0, NPqH=0, NPqHD=0, NPqHu=0, NPqW=0, NPuG=0, NPuH=0, NPuW=0, QCD=0, QED=4, WEIGHTED=4

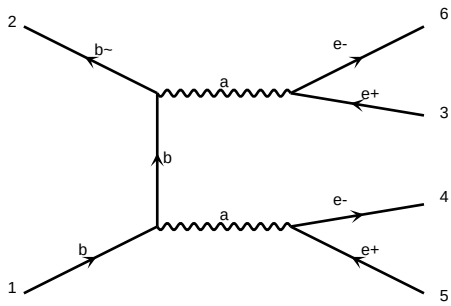

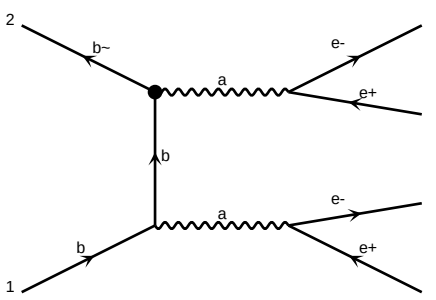

diagram 1531 NP=1, NPcG=0, NPcGtil=0, NPcH=0, NPcHB=0, NPcHDD=0, NPcHW=0, NPcHWB=0, NPcW=0, NPdcHB=0, NPdcHW=0, NPeHB=0, NPeHW=0, NPlebQ=0, NPlebQ3=0, NPlebQ3_1=0, NPlebQ3_2=0, NPlebQ3_3=0, NPlebQ_1=0, NPlebQ_2=0, NPlebQ_3=0, NPlebQtil=0, NPlebQtil_1=0, NPlebQtil_2=0, NPlebQtil_3=0, NPledQ=0, NPledQ_1=0, NPledQ_2=0, NPledQ_3=0, NPlelQ=0, NPlelQ_1=0, NPlelQ_2=0, NPlelQ_3=0, NPleu=0, NPleu_1=0, NPleu_2=0, NPleu_3=0, NPlqMix1=0, NPlqMix1_1=0, NPlqMix1_2=0, NPlqMix1_3=0, NPlqMix3=0, NPlqMix3_1=0, NPlqMix3_2=0, NPlqMix3_3=0, NPqe=0, NPqe_1=0, NPqe_2=0, NPqe_3=0, NPqu=0, NPqu_1=0, NPqu_2=0, NPqu_3=0, NPquMix1=0, NPquMix1_1=0, NPquMix1_2=0, NPquMix1_3=0, NPquMix8=0, NPquMix8_1=0, NPquMix8_2=0, NPquMix8_3=0, NPtHB=0, NPtHW=0, NPtW=0, NPuHB=0, NPuHW=0, NPuW=0, NPuu=0, NPuu_1=0, NPuu_2=0, NPuu_3=0, NPuuMix1=0, NPuuMix1_1=0, NPuuMix1_2=0, NPuuMix1_3=0, NPuuMix8=0, NPuuMix8_1=0, NPuuMix8_2=0, NPuuMix8_3=0, NPveMix1=0, NPveMix1_1=0, NPveMix1_2=0, NPveMix1_3=0, NPveMix3=0, NPveMix3_1=0, NPveMix3_2=0, NPveMix3_3=0, NPvu=0, NPvu_1=0, NPvu_2=0, NPvu_3=0, NPvuMix1=0, NPvuMix1_1=0, NPvuMix1_2=0, NPvuMix1_3=0, NPvuMix8=0, NPvuMix8_1=0, NPvuMix8_2=0, NPvuMix8_3=0, NPvv=0, NPvv_1=0, NPvv_2=0, NPvv_3=0, NPvvMix1=0, NPvvMix1_1=0, NPvvMix1_2=0, NPvvMix1_3=0, NPvvMix8=0, NPvvMix8_1=0, NPvvMix8_2=0, NPvvMix8_3=0, NPxHB=0, NPxHW=0, NPxW=0, NPxu=0, NPxu_1=0, NPxu_2=0, NPxu_3=0, NPxuMix1=0, NPxuMix1_1=0, NPxuMix1_2=0, NPxuMix1_3=0, NPxuMix8=0, NPxuMix8_1=0, NPxuMix8_2=0, NPxuMix8_3=0, NPxv=0, NPxv_1=0, NPxv_2=0, NPxv_3=0, NPxvMix1=0, NPxvMix1_1=0, NPxvMix1_2=0, NPxvMix1_3=0, NPxvMix8=0, NPxvMix8_1=0, NPxvMix8_2=0, NPxvMix8_3=0, NPxx=0, NPxx_1=0, NPxx_2=0, NPxx_3=0, NPxxMix1=0, NPxxMix1_1=0, NPxxMix1_2=0, NPxxMix1_3=0, NPxxMix8=0, NPxxMix8_1=0, NPxxMix8_2=0, NPxxMix8_3=0, NPyHB=0, NPyHW=0, NPyW=0, NPyu=0, NPyu_1=0, NPyu_2=0, NPyu_3=0, NPyuMix1=0, NPyuMix1_1=0, NPyuMix1_2=0, NPyuMix1_3=0, NPyuMix8=0, NPyuMix8_1=0, NPyuMix8_2=0, NPyuMix8_3=0, NPyv=0, NPyv_1=0, NPyv_2=0, NPyv_3=0, NPyvMix1=0, NPyvMix1_1=0, NPyvMix1_2=0, NPyvMix1_3=0, NPyvMix8=0, NPyvMix8_1=0, NPyvMix8_2=0, NPyvMix8_3=0, NPyx=0, NPyx_1=0, NPyx_2=0, NPyx_3=0, NPyxMix1=0, NPyxMix1_1=0, NPyxMix1_2=0, NPyxMix1_3=0, NPyxMix8=0, NPyxMix8_1=0, NPyxMix8_2=0, NPyxMix8_3=0, NPyy=0, NPyy_1=0, NPyy_2=0, NPyy_3=0, NPyyMix1=0, NPyyMix1_1=0, NPyyMix1_2=0, NPyyMix1_3=0, NPyyMix8=0, NPyyMix8_1=0, NPyyMix8_2=0, NPyyMix8_3=0, NPzHB=0, NPzHW=0, NPzW=0, NPzu=0, NPzu_1=0, NPzu_2=0, NPzu_3=0, NPzuMix1=0, NPzuMix1_1=0, NPzuMix1_2=0, NPzuMix1_3=0, NPzuMix8=0, NPzuMix8_1=0, NPzuMix8_2=0, NPzuMix8_3=0, NPzv=0, NPzv_1=0, NPzv_2=0, NPzv_3=0, NPzvMix1=0, NPzvMix1_1=0, NPzvMix1_2=0, NPzvMix1_3=0, NPzvMix8=0, NPzvMix8_1=0, NPzvMix8_2=0, NPzvMix8_3=0, NPzx=0, NPzx_1=0, NPzx_2=0, NPzx_3=0, NPzxMix1=0, NPzxMix1_1=0, NPzxMix1_2=0, NPzxMix1_3=0, NPzxMix8=0, NPzxMix8_1=0, NPzxMix8_2=0, NPzxMix8_3=0, NPzy=0, NPzy_1=0, NPzy_2=0, NPzy_3=0, NPzyMix1=0, NPzyMix1_1=0, NPzyMix1_2=0, NPzyMix1_3=0, NPzyMix8=0, NPzyMix8_1=0, NPzyMix8_2=0, NPzyMix8_3=0, NPzz=0, NPzz_1=0, NPzz_2=0, NPzz_3=0, NPzzMix1=0, NPzzMix1_1=0, NPzzMix1_2=0, NPzzMix1_3=0, NPzzMix8=0, NPzzMix8_1=0, NPzzMix8_2=0, NPzzMix8_3=0, NPbW=0, NPcbW=0, NPcdHW=0, NPcdW=0, NPcuHW=0, NPcuW=0, NPdHW=0, NPdW=0, NPeW=0, NPlebQ3_4=0, NPlebQ_4=0, NPlebQtil_4=0, NPledQ_4=0, NPlelQ_4=0, NPleu_4=0, NPlqMix1_4=0, NPlqMix3_4=0, NPqe_4=0, NPqu_4=0, NPquMix1_4=0, NPquMix8_4=0, NPuHW=0, NPuW=0, NPuu_4=0, NPuuMix1_4=0, NPuuMix8_4=0, NPveMix1_4=0, NPveMix3_4=0, NPvu_4=0, NPvuMix1_4=0, NPvuMix8_4=0, NPvv_4=0, NPvvMix1_4=0, NPvvMix8_4=0, NPxHW=0, NPxW=0, NPxu_4=0, NPxuMix1_4=0, NPxuMix8_4=0, NPxv_4=0, NPxvMix1_4=0, NPxvMix8_4=0, NPxx_4=0, NPxxMix1_4=0, NPxxMix8_4=0, NPyHW=0, NPyW=0, NPyu_4=0, NPyuMix1_4=0, NPyuMix8_4=0, NPyv_4=0, NPyvMix1_4=0, NPyvMix8_4=0, NPyx_4=0, NPyxMix1_4=0, NPyxMix8_4=0, NPyy_4=0, NPyyMix1_4=0, NPyyMix8_4=0, NPzHW=0, NPzW=0, NPzu_4=0, NPzuMix1_4=0, NPzuMix8_4=0, NPzv_4=0, NPzvMix1_4=0, NPzvMix8_4=0, NPzx_4=0, NPzxMix1_4=0, NPzxMix8_4=0, NPzy_4=0, NPzyMix1_4=0, NPzyMix8_4=0, NPzz_4=0, NPzzMix1_4=0, NPzzMix8_4=0, NPbW=0, NPcbW=0, NPcdHW=0, NPcdW=0, NPcuHW=0, NPcuW=0, NPdHW=0, NPdW=0, NPeW=0

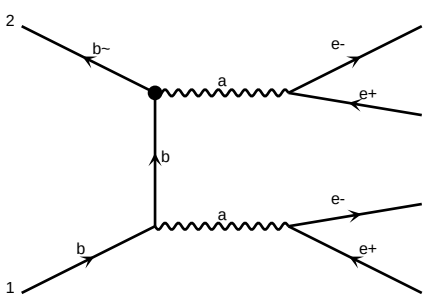

diagram 1534 NP=1, NPcG=0, NPcGtil=0, NPcH=0, NPcHB=0, NPcHDD=0, NPcHW=0, NPcHWB=0, NPcW=0, NPdcHB=0, NPdcHW=0, NPeHB=0, NPeHW=0, NPlebQ=0, NPlebQ3=0, NPlebQ3_1=0, NPlebQ3_2=0, NPlebQ3_3=0, NPlebQ_1=0, NPlebQ_2=0, NPlebQ_3=0, NPlebQtil=0, NPlebQtil_1=0, NPlebQtil_2=0, NPlebQtil_3=0, NPledQ=0, NPledQ_1=0, NPledQ_2=0, NPledQ_3=0, NPlelQ=0, NPlelQ_1=0, NPlelQ_2=0, NPlelQ_3=0, NPleu=0, NPleu_1=0, NPleu_2=0, NPleu_3=0, NPlqMix1=0, NPlqMix1_1=0, NPlqMix1_2=0, NPlqMix1_3=0, NPlqMix3=0, NPlqMix3_1=0, NPlqMix3_2=0, NPlqMix3_3=0, NPqe=0, NPqe_1=0, NPqe_2=0, NPqe_3=0, NPqu=0, NPqu_1=0, NPqu_2=0, NPqu_3=0, NPquMix1=0, NPquMix1_1=0, NPquMix1_2=0, NPquMix1_3=0, NPquMix8=0, NPquMix8_1=0, NPquMix8_2=0, NPquMix8_3=0, NPtHB=0, NPtHW=0, NPtW=0, NPuHB=0, NPuHW=0, NPuW=0, NPuu=0, NPuu_1=0, NPuu_2=0, NPuu_3=0, NPuuMix1=0, NPuuMix1_1=0, NPuuMix1_2=0, NPuuMix1_3=0, NPuuMix8=0, NPuuMix8_1=0, NPuuMix8_2=0, NPuuMix8_3=0, NPveMix1=0, NPveMix1_1=0, NPveMix1_2=0, NPveMix1_3=0, NPveMix3=0, NPveMix3_1=0, NPveMix3_2=0, NPveMix3_3=0, NPvu=0, NPvu_1=0, NPvu_2=0, NPvu_3=0, NPvuMix1=0, NPvuMix1_1=0, NPvuMix1_2=0, NPvuMix1_3=0, NPvuMix8=0, NPvuMix8_1=0, NPvuMix8_2=0, NPvuMix8_3=0, NPvv=0, NPvv_1=0, NPvv_2=0, NPvv_3=0, NPvvMix1=0, NPvvMix1_1=0, NPvvMix1_2=0, NPvvMix1_3=0, NPvvMix8=0, NPvvMix8_1=0, NPvvMix8_2=0, NPvvMix8_3=0, NPxHB=0, NPxHW=0, NPxW=0, NPxu=0, NPxu_1=0, NPxu_2=0, NPxu_3=0, NPxuMix1=0, NPxuMix1_1=0, NPxuMix1_2=0, NPxuMix1_3=0, NPxuMix8=0, NPxuMix8_1=0, NPxuMix8_2=0, NPxuMix8_3=0, NPxv=0, NPxv_1=0, NPxv_2=0, NPxv_3=0, NPxvMix1=0, NPxvMix1_1=0, NPxvMix1_2=0, NPxvMix1_3=0, NPxvMix8=0, NPxvMix8_1=0, NPxvMix8_2=0, NPxvMix8_3=0, NPxx=0, NPxx_1=0, NPxx_2=0, NPxx_3=0, NPxxMix1=0, NPxxMix1_1=0, NPxxMix1_2=0, NPxxMix1_3=0, NPxxMix8=0, NPxxMix8_1=0, NPxxMix8_2=0, NPxxMix8_3=0, NPyHB=0, NPyHW=0, NPyW=0, NPyu=0, NPyu_1=0, NPyu_2=0, NPyu_3=0, NPyuMix1=0, NPyuMix1_1=0, NPyuMix1_2=0, NPyuMix1_3=0, NPyuMix8=0, NPyuMix8_1=0, NPyuMix8_2=0, NPyuMix8_3=0, NPyv=0, NPyv_1=0, NPyv_2=0, NPyv_3=0, NPyvMix1=0, NPyvMix1_1=0, NPyvMix1_2=0, NPyvMix1_3=0, NPyvMix8=0, NPyvMix8_1=0, NPyvMix8_2=0, NPyvMix8_3=0, NPyx=0, NPyx_1=0, NPyx_2=0, NPyx_3=0, NPyxMix1=0, NPyxMix1_1=0, NPyxMix1_2=0, NPyxMix1_3=0, NPyxMix8=0, NPyxMix8_1=0, NPyxMix8_2=0, NPyxMix8_3=0, NPyy=0, NPyy_1=0, NPyy_2=0, NPyy_3=0, NPyyMix1=0, NPyyMix1_1=0, NPyyMix1_2=0, NPyyMix1_3=0, NPyyMix8=0, NPyyMix8_1=0, NPyyMix8_2=0, NPyyMix8_3=0, NPzHB=0, NPzHW=0, NPzW=0, NPzu=0, NPzu_1=0, NPzu_2=0, NPzu_3=0, NPzuMix1=0, NPzuMix1_1=0, NPzuMix1_2=0, NPzuMix1_3=0, NPzuMix8=0, NPzuMix8_1=0, NPzuMix8_2=0, NPzuMix8_3=0, NPzv=0, NPzv_1=0, NPzv_2=0, NPzv_3=0, NPzvMix1=0, NPzvMix1_1=0, NPzvMix1_2=0, NPzvMix1_3=0, NPzvMix8=0, NPzvMix8_1=0, NPzvMix8_2=0, NPzvMix8_3=0, NPzx=0, NPzx_1=0, NPzx_2=0, NPzx_3=0, NPzxMix1=0, NPzxMix1_1=0, NPzxMix1_2=0, NPzxMix1_3=0, NPzxMix8=0, NPzxMix8_1=0, NPzxMix8_2=0, NPzxMix8_3=0, NPzy=0, NPzy_1=0, NPzy_2=0, NPzy_3=0, NPzyMix1=0, NPzyMix1_1=0, NPzyMix1_2=0, NPzyMix1_3=0, NPzyMix8=0, NPzyMix8_1=0, NPzyMix8_2=0, NPzyMix8_3=0, NPzz=0, NPzz_1=0, NPzz_2=0, NPzz_3=0, NPzzMix1=0, NPzzMix1_1=0, NPzzMix1_2=0, NPzzMix1_3=0, NPzzMix8=0, NPzzMix8_1=0, NPzzMix8_2=0, NPzzMix8_3=0, NPbW=0, NPcbW=0, NPcdHW=0, NPcdW=0, NPcuHW=0, NPcuW=0, NPdHW=0, NPdW=0, NPeW=0, NPlebQ3_4=0, NPlebQ_4=0, NPlebQtil_4=0, NPledQ_4=0, NPlelQ_4=0, NPleu_4=0, NPlqMix1_4=0, NPlqMix3_4=0, NPqe_4=0, NPqu_4=0, NPquMix1_4=0, NPquMix8_4=0, NPuHW=0, NPuW=0, NPuu_4=0, NPuuMix1_4=0, NPuuMix8_4=0, NPveMix1_4=0, NPveMix3_4=0, NPvu_4=0, NPvuMix1_4=0, NPvuMix8_4=0, NPvv_4=0, NPvvMix1_4=0, NPvvMix8_4=0, NPxHW=0, NPxW=0, NPxu_4=0, NPxuMix1_4=0, NPxuMix8_4=0, NPxv_4=0, NPxvMix1_4=0, NPxvMix8_4=0, NPxx_4=0, NPxxMix1_4=0, NPxxMix8_4=0, NPyHW=0, NPyW=0, NPyu_4=0, NPyuMix1_4=0, NPyuMix8_4=0, NPyv_4=0, NPyvMix1_4=0, NPyvMix8_4=0, NPyx_4=0, NPyxMix1_4=0, NPyxMix8_4=0, NPyy_4=0, NPyyMix1_4=0, NPyyMix8_4=0, NPzHW=0, NPzW=0, NPzu_4=0, NPzuMix1_4=0, NPzuMix8_4=0, NPzv_4=0, NPzvMix1_4=0, NPzvMix8_4=0, NPzx_4=0, NPzxMix1_4=0, NPzxMix8_4=0, NPzy_4=0, NPzyMix1_4=0, NPzyMix8_4=0, NPzz_4=0, NPzzMix1_4=0, NPzzMix8_4=0, NPbW=0, NPcbW=0, NPcdHW=0, NPcdW=0, NPcuHW=0, NPcuW=0, NPdHW=0, NPdW=0, NPeW=0

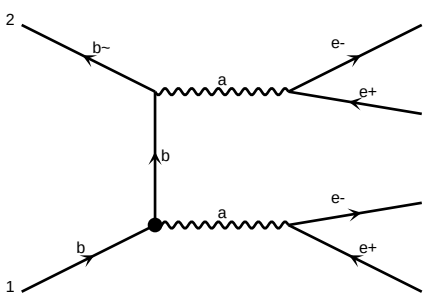

diagram 1537 NP=1, NPcG=0, NPcGtil=0, NPcH=0, NPcHB=0, NPcHDD=0, NPcHW=0, NPcHWB=0, NPcW=0, NPdcHB=0, NPdcHW=0, NPeHB=0, NPeHW=0, NPlebQ=0, NPlebQ3=0, NPlebQ3_1=0, NPlebQ3_2=0, NPlebQ3_3=0, NPlebQ_1=0, NPlebQ_2=0, NPlebQ_3=0, NPlebQtil=0, NPlebQtil_1=0, NPlebQtil_2=0, NPlebQtil_3=0, NPledQ=0, NPledQ_1=0, NPledQ_2=0, NPledQ_3=0, NPlelQ=0, NPlelQ_1=0, NPlelQ_2=0, NPlelQ_3=0, NPleu=0, NPleu_1=0, NPleu_2=0, NPleu_3=0, NPlqMix1=0, NPlqMix1_1=0, NPlqMix1_2=0, NPlqMix1_3=0, NPlqMix3=0, NPlqMix3_1=0, NPlqMix3_2=0, NPlqMix3_3=0, NPqe=0, NPqe_1=0, NPqe_2=0, NPqe_3=0, NPqu=0, NPqu_1=0, NPqu_2=0, NPqu_3=0, NPquMix1=0, NPquMix1_1=0, NPquMix1_2=0, NPquMix1_3=0, NPquMix8=0, NPquMix8_1=0, NPquMix8_2=0, NPquMix8_3=0, NPtHB=0, NPtHW=0, NPtW=0, NPuHB=0, NPuHW=0, NPuW=0, NPuu=0, NPuu_1=0, NPuu_2=0, NPuu_3=0, NPuuMix1=0, NPuuMix1_1=0, NPuuMix1_2=0, NPuuMix1_3=0, NPuuMix8=0, NPuuMix8_1=0, NPuuMix8_2=0, NPuuMix8_3=0, NPveMix1=0, NPveMix1_1=0, NPveMix1_2=0, NPveMix1_3=0, NPveMix3=0, NPveMix3_1=0, NPveMix3_2=0, NPveMix3_3=0, NPvu=0, NPvu_1=0, NPvu_2=0, NPvu_3=0, NPvuMix1=0, NPvuMix1_1=0, NPvuMix1_2=0, NPvuMix1_3=0, NPvuMix8=0, NPvuMix8_1=0, NPvuMix8_2=0, NPvuMix8_3=0, NPvv=0, NPvv_1=0, NPvv_2=0, NPvv_3=0, NPvvMix1=0, NPvvMix1_1=0, NPvvMix1_2=0, NPvvMix1_3=0, NPvvMix8=0, NPvvMix8_1=0, NPvvMix8_2=0, NPvvMix8_3=0, NPxHB=0, NPxHW=0, NPxW=0, NPxu=0, NPxu_1=0, NPxu_2=0, NPxu_3=0, NPxuMix1=0, NPxuMix1_1=0, NPxuMix1_2=0, NPxuMix1_3=0, NPxuMix8=0, NPxuMix8_1=0, NPxuMix8_2=0, NPxuMix8_3=0, NPxv=0, NPxv_1=0, NPxv_2=0, NPxv_3=0, NPxvMix1=0, NPxvMix1_1=0, NPxvMix1_2=0, NPxvMix1_3=0, NPxvMix8=0, NPxvMix8_1=0, NPxvMix8_2=0, NPxvMix8_3=0, NPxx=0, NPxx_1=0, NPxx_2=0, NPxx_3=0, NPxxMix1=0, NPxxMix1_1=0, NPxxMix1_2=0, NPxxMix1_3=0, NPxxMix8=0, NPxxMix8_1=0, NPxxMix8_2=0, NPxxMix8_3=0, NPyHB=0, NPyHW=0, NPyW=0, NPyu=0, NPyu_1=0, NPyu_2=0, NPyu_3=0, NPyuMix1=0, NPyuMix1_1=0, NPyuMix1_2=0, NPyuMix1_3=0, NPyuMix8=0, NPyuMix8_1=0, NPyuMix8_2=0, NPyuMix8_3=0, NPyv=0, NPyv_1=0, NPyv_2=0, NPyv_3=0, NPyvMix1=0, NPyvMix1_1=0, NPyvMix1_2=0, NPyvMix1_3=0, NPyvMix8=0, NPyvMix8_1=0, NPyvMix8_2=0, NPyvMix8_3=0, NPyx=0, NPyx_1=0, NPyx_2=0, NPyx_3=0, NPyxMix1=0, NPyxMix1_1=0, NPyxMix1_2=0, NPyxMix1_3=0, NPyxMix8=0, NPyxMix8_1=0, NPyxMix8_2=0, NPyxMix8_3=0, NPyy=0, NPyy_1=0, NPyy_2=0, NPyy_3=0, NPyyMix1=0, NPyyMix1_1=0, NPyyMix1_2=0, NPyyMix1_3=0, NPyyMix8=0, NPyyMix8_1=0, NPyyMix8_2=0, NPyyMix8_3=0, NPzHB=0, NPzHW=0, NPzW=0, NPzu=0, NPzu_1=0, NPzu_2=0, NPzu_3=0, NPzuMix1=0, NPzuMix1_1=0, NPzuMix1_2=0, NPzuMix1_3=0, NPzuMix8=0, NPzuMix8_1=0, NPzuMix8_2=0, NPzuMix8_3=0, NPzv=0, NPzv_1=0, NPzv_2=0, NPzv_3=0, NPzvMix1=0, NPzvMix1_1=0, NPzvMix1_2=0, NPzvMix1_3=0, NPzvMix8=0, NPzvMix8_1=0, NPzvMix8_2=0, NPzvMix8_3=0, NPzx=0, NPzx_1=0, NPzx_2=0, NPzx_3=0, NPzxMix1=0, NPzxMix1_1=0, NPzxMix1_2=0, NPzxMix1_3=0, NPzxMix8=0, NPzxMix8_1=0, NPzxMix8_2=0, NPzxMix8_3=0, NPzy=0, NPzy_1=0, NPzy_2=0, NPzy_3=0, NPzyMix1=0, NPzyMix1_1=0, NPzyMix1_2=0, NPzyMix1_3=0, NPzyMix8=0, NPzyMix8_1=0, NPzyMix8_2=0, NPzyMix8_3=0, NPzz=0, NPzz_1=0, NPzz_2=0, NPzz_3=0, NPzzMix1=0, NPzzMix1_1=0, NPzzMix1_2=0, NPzzMix1_3=0, NPzzMix8=0, NPzzMix8_1=0, NPzzMix8_2=0, NPzzMix8_3=0, NPbW=0, NPcbW=0, NPcdHW=0, NPcdW=0, NPcuHW=0, NPcuW=0, NPdHW=0, NPdW=0, NPeW=0, NPlebQ3_4=0, NPlebQ_4=0, NPlebQtil_4=0, NPledQ_4=0, NPlelQ_4=0, NPleu_4=0, NPlqMix1_4=0, NPlqMix3_4=0, NPqe_4=0, NPqu_4=0, NPquMix1_4=0, NPquMix8_4=0, NPuHW=0, NPuW=0, NPuu_4=0, NPuuMix1_4=0, NPuuMix8_4=0, NPveMix1_4=0, NPveMix3_4=0, NPvu_4=0, NPvuMix1_4=0, NPvuMix8_4=0, NPvv_4=0, NPvvMix1_4=0, NPvvMix8_4=0, NPxHW=0, NPxW=0, NPxu_4=0, NPxuMix1_4=0, NPxuMix8_4=0, NPxv_4=0, NPxvMix1_4=0, NPxvMix8_4=0, NPxx_4=0, NPxxMix1_4=0, NPxxMix8_4=0, NPyHW=0, NPyW=0, NPyu_4=0, NPyuMix1_4=0, NPyuMix8_4=0, NPyv_4=0, NPyvMix1_4=0, NPyvMix8_4=0, NPyx_4=0, NPyxMix1_4=0, NPyxMix8_4=0, NPyy_4=0, NPyyMix1_4=0, NPyyMix8_4=0, NPzHW=0, NPzW=0, NPzu_4=0, NPzuMix1_4=0, NPzuMix8_4=0, NPzv_4=0, NPzvMix1_4=0, NPzvMix8_4=0, NPzx_4=0, NPzxMix1_4=0, NPzxMix8_4=0, NPzy_4=0, NPzyMix1_4=0, NPzyMix8_4=0, NPzz_4=0, NPzzMix1_4=0, NPzzMix8_4=0, NPbW=0, NPcbW=0, NPcdHW=0, NPcdW=0, NPcuHW=0, NPcuW=0, NPdHW=0, NPdW=0, NPeW=0

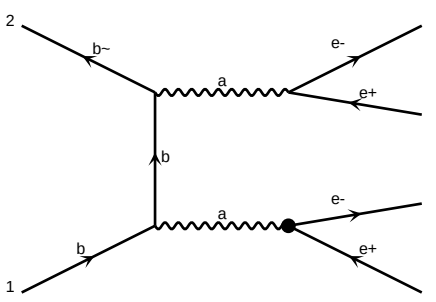

diagram 1540 NP=1, NPcG=0, NPcGtil=0, NPcH=0, NPcHB=0, NPcHDD=0, NPcHW=0, NPcHWB=0, NPcW=0, NPdcHB=0, NPdcHW=0, NPeHB=0, NPeHW=0, NPlebQ=0, NPlebQ3=0, NPlebQ3_1=0, NPlebQ3_2=0, NPlebQ3_3=0, NPlebQ_1=0, NPlebQ_2=0, NPlebQ_3=0, NPlebQtil=0, NPlebQtil_1=0, NPlebQtil_2=0, NPlebQtil_3=0, NPledQ=0, NPledQ_1=0, NPledQ_2=0, NPledQ_3=0, NPlelQ=0, NPlelQ_1=0, NPlelQ_2=0, NPlelQ_3=0, NPleu=0, NPleu_1=0, NPleu_2=0, NPleu_3=0, NPlqMix1=0, NPlqMix1_1=0, NPlqMix1_2=0, NPlqMix1_3=0, NPlqMix3=0, NPlqMix3_1=0, NPlqMix3_2=0, NPlqMix3_3=0, NPqe=0, NPqe_1=0, NPqe_2=0, NPqe_3=0, NPqu=0, NPqu_1=0, NPqu_2=0, NPqu_3=0, NPquMix1=0, NPquMix1_1=0, NPquMix1_2=0, NPquMix1_3=0, NPquMix8=0, NPquMix8_1=0, NPquMix8_2=0, NPquMix8_3=0, NPtHB=0, NPtHW=0, NPtW=0, NPuHB=0, NPuHW=0, NPuW=0, NPuu=0, NPuu_1=0, NPuu_2=0, NPuu_3=0, NPuuMix1=0, NPuuMix1_1=0, NPuuMix1_2=0, NPuuMix1_3=0, NPuuMix8=0, NPuuMix8_1=0, NPuuMix8_2=0, NPuuMix8_3=0, NPveMix1=0, NPveMix1_1=0, NPveMix1_2=0, NPveMix1_3=0, NPveMix3=0, NPveMix3_1=0, NPveMix3_2=0, NPveMix3_3=0, NPvu=0, NPvu_1=0, NPvu_2=0, NPvu_3=0, NPvuMix1=0, NPvuMix1_1=0, NPvuMix1_2=0, NPvuMix1_3=0, NPvuMix8=0, NPvuMix8_1=0, NPvuMix8_2=0, NPvuMix8_3=0, NPvv=0, NPvv_1=0, NPvv_2=0, NPvv_3=0, NPvvMix1=0, NPvvMix1_1=0, NPvvMix1_2=0, NPvvMix1_3=0, NPvvMix8=0, NPvvMix8_1=0, NPvvMix8_2=0, NPvvMix8_3=0, NPxHB=0, NPxHW=0, NPxW=0, NPxu=0, NPxu_1=0, NPxu_2=0, NPxu_3=0, NPxuMix1=0, NPxuMix1_1=0, NPxuMix1_2=0, NPxuMix1_3=0, NPxuMix8=0, NPxuMix8_1=0, NPxuMix8_2=0, NPxuMix8_3=0, NPxv=0, NPxv_1=0, NPxv_2=0, NPxv_3=0, NPxvMix1=0, NPxvMix1_1=0, NPxvMix1_2=0, NPxvMix1_3=0, NPxvMix8=0, NPxvMix8_1=0, NPxvMix8_2=0, NPxvMix8_3=0, NPxx=0, NPxx_1=0, NPxx_2=0, NPxx_3=0, NPxxMix1=0, NPxxMix1_1=0, NPxxMix1_2=0, NPxxMix1_3=0, NPxxMix8=0, NPxxMix8_1=0, NPxxMix8_2=0, NPxxMix8_3=0, NPyHB=0, NPyHW=0, NPyW=0, NPyu=0, NPyu_1=0, NPyu_2=0, NPyu_3=0, NPyuMix1=0, NPyuMix1_1=0, NPyuMix1_2=0, NPyuMix1_3=0, NPyuMix8=0, NPyuMix8_1=0, NPyuMix8_2=0, NPyuMix8_3=0, NPyv=0, NPyv_1=0, NPyv_2=0, NPyv_3=0, NPyvMix1=0, NPyvMix1_1=0, NPyvMix1_2=0, NPyvMix1_3=0, NPyvMix8=0, NPyvMix8_1=0, NPyvMix8_2=0, NPyvMix8_3=0, NPyx=0, NPyx_1=0, NPyx_2=0, NPyx_3=0, NPyxMix1=0, NPyxMix1_1=0, NPyxMix1_2=0, NPyxMix1_3=0, NPyxMix8=0, NPyxMix8_1=0, NPyxMix8_2=0, NPyxMix8_3=0, NPyy=0, NPyy_1=0, NPyy_2=0, NPyy_3=0, NPyyMix1=0, NPyyMix1_1=0, NPyyMix1_2=0, NPyyMix1_3=0, NPyyMix8=0, NPyyMix8_1=0, NPyyMix8_2=0, NPyyMix8_3=0, NPzHB=0, NPzHW=0, NPzW=0, NPzu=0, NPzu_1=0, NPzu_2=0, NPzu_3=0, NPzuMix1=0, NPzuMix1_1=0, NPzuMix1_2=0, NPzuMix1_3=0, NPzuMix8=0, NPzuMix8_1=0, NPzuMix8_2=0, NPzuMix8_3=0, NPzv=0, NPzv_1=0, NPzv_2=0, NPzv_3=0, NPzvMix1=0, NPzvMix1_1=0, NPzvMix1_2=0, NPzvMix1_3=0, NPzvMix8=0, NPzvMix8_1=0, NPzvMix8_2=0, NPzvMix8_3=0, NPzx=0, NPzx_1=0, NPzx_2=0, NPzx_3=0, NPzxMix1=0, NPzxMix1_1=0, NPzxMix1_2=0, NPzxMix1_3=0, NPzxMix8=0, NPzxMix8_1=0, NPzxMix8_2=0, NPzxMix8_3=0, NPzy=0, NPzy_1=0, NPzy_2=0, NPzy_3=0, NPzyMix1=0, NPzyMix1_1=0, NPzyMix1_2=0, NPzyMix1_3=0, NPzyMix8=0, NPzyMix8_1=0, NPzyMix8_2=0, NPzyMix8_3=0, NPzz=0, NPzz_1=0, NPzz_2=0, NPzz_3=0, NPzzMix1=0, NPzzMix1_1=0, NPzzMix1_2=0, NPzzMix1_3=0, NPzzMix8=0, NPzzMix8_1=0, NPzzMix8_2=0, NPzzMix8_3=0, NPbW=0, NPcbW=0, NPcdHW=0, NPcdW=0, NPcuHW=0, NPcuW=0, NPdHW=0, NPdW=0, NPeW=0, NPlebQ3_4=0, NPlebQ_4=0, NPlebQtil_4=0, NPledQ_4=0, NPlelQ_4=0, NPleu_4=0, NPlqMix1_4=0, NPlqMix3_4=0, NPqe_4=0, NPqu_4=0, NPquMix1_4=0, NPquMix8_4=0, NPuHW=0, NPuW=0, NPuu_4=0, NPuuMix1_4=0, NPuuMix8_4=0, NPveMix1_4=0, NPveMix3_4=0, NPvu_4=0, NPvuMix1_4=0, NPvuMix8_4=0, NPvv_4=0, NPvvMix1_4=0, NPvvMix8_4=0, NPxHW=0, NPxW=0, NPxu_4=0, NPxuMix1_4=0, NPxuMix8_4=0, NPxv_4=0, NPxvMix1_4=0, NPxvMix8_4=0, NPxx_4=0, NPxxMix1_4=0, NPxxMix8_4=0, NPyHW=0, NPyW=0, NPyu_4=0, NPyuMix1_4=0, NPyuMix8_4=0, NPyv_4=0, NPyvMix1_4=0, NPyvMix8_4=0, NPyx_4=0, NPyxMix1_4=0, NPyxMix8_4=0, NPyy_4=0, NPyyMix1_4=0, NPyyMix8_4=0, NPzHW=0, NPzW=0, NPzu_4=0, NPzuMix1_4=0, NPzuMix8_4=0, NPzv_4=0, NPzvMix1_4=0, NPzvMix8_4=0, NPzx_4=0, NPzxMix1_4=0, NPzxMix8_4=0, NPzy_4=0, NPzyMix1_4=0, NPzyMix8_4=0, NPzz_4=0, NPzzMix1_4=0, NPzzMix8_4=0, NPbW=0, NPcbW=0, NPcdHW=0, NPcdW=0, NPcuHW=0, NPcuW=0, NPdHW=0, NPdW=0, NPeW=0

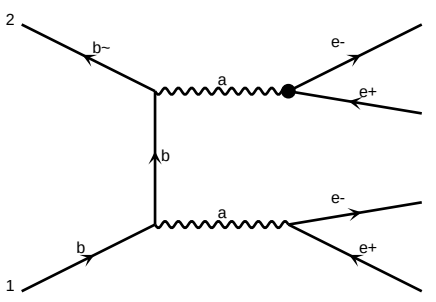

diagram 1543 NP=1, NPcG=0, NPcGtil=0, NPcH=0, NPcHB=0, NPcHDD=0, NPcHW=0, NPcHWB=0, NPcW=0, NPdcHB=0, NPdcHW=0, NPeHB=0, NPeHW=0, NPlebQ=0, NPlebQ3=0, NPlebQ3_1=0, NPlebQ3_2=0, NPlebQ3_3=0, NPlebQ_1=0, NPlebQ_2=0, NPlebQ_3=0, NPlebQtil=0, NPlebQtil_1=0, NPlebQtil_2=0, NPlebQtil_3=0, NPledQ=0, NPledQ_1=0, NPledQ_2=0, NPledQ_3=0, NPlelQ=0, NPlelQ_1=0, NPlelQ_2=0, NPlelQ_3=0, NPleu=0, NPleu_1=0, NPleu_2=0, NPleu_3=0, NPlqMix1=0, NPlqMix1_1=0, NPlqMix1_2=0, NPlqMix1_3=0, NPlqMix3=0, NPlqMix3_1=0, NPlqMix3_2=0, NPlqMix3_3=0, NPqe=0, NPqe_1=0, NPqe_2=0, NPqe_3=0, NPqu=0, NPqu_1=0, NPqu_2=0, NPqu_3=0, NPquMix1=0, NPquMix1_1=0, NPquMix1_2=0, NPquMix1_3=0, NPquMix8=0, NPquMix8_1=0, NPquMix8_2=0, NPquMix8_3=0, NPtHB=0, NPtHW=0, NPtW=0, NPuHB=0, NPuHW=0, NPuW=0, NPuu=0, NPuu_1=0, NPuu_2=0, NPuu_3=0, NPuuMix1=0, NPuuMix1_1=0, NPuuMix1_2=0, NPuuMix1_3=0, NPuuMix8=0, NPuuMix8_1=0, NPuuMix8_2=0, NPuuMix8_3=0, NPveMix1=0, NPveMix1_1=0, NPveMix1_2=0, NPveMix1_3=0, NPveMix3=0, NPveMix3_1=0, NPveMix3_2=0, NPveMix3_3=0, NPvu=0, NPvu_1=0, NPvu_2=0, NPvu_3=0, NPvuMix1=0, NPvuMix1_1=0, NPvuMix1_2=0, NPvuMix1_3=0, NPvuMix8=0, NPvuMix8_1=0, NPvuMix8_2=0, NPvuMix8_3=0, NPvv=0, NPvv_1=0, NPvv_2=0, NPvv_3=0, NPvvMix1=0, NPvvMix1_1=0, NPvvMix1_2=0, NPvvMix1_3=0, NPvvMix8=0, NPvvMix8_1=0, NPvvMix8_2=0, NPvvMix8_3=0, NPxHB=0, NPxHW=0, NPxW=0, NPxu=0, NPxu_1=0, NPxu_2=0, NPxu_3=0, NPxuMix1=0, NPxuMix1_1=0, NPxuMix1_2=0, NPxuMix1_3=0, NPxuMix8=0, NPxuMix8_1=0, NPxuMix8_2=0, NPxuMix8_3=0, NPxv=0, NPxv_1=0, NPxv_2=0, NPxv_3=0, NPxvMix1=0, NPxvMix1_1=0, NPxvMix1_2=0, NPxvMix1_3=0, NPxvMix8=0, NPxvMix8_1=0, NPxvMix8_2=0,

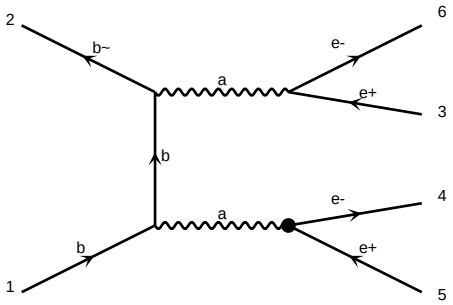

diagram 1546 NP=1, NPcG=0, NPcGtil=0, NPcH=0, NPcHB=0, NPcHDD=0, NPcHW=0, NPcHWB=0, NPcW=0, NPlq1=0, NPlq3=0, NPqe=0, NPqu1=0, NPqu8=0, NPqd1=0, NPqd8=0, NPlu=0, NPld=0, NPle=0, NPeu=0, NPed=0, NPlequ1=0, NPlequ3=0, NPledq=0, NPquqd1=0, NPquqd8=0, NPllq1=0, NPllq3=0, NPlle=0, NPqq1=0, NPqq3=0, NPuu=0, NPud1=0, NPud8=0, NPdd=0, NPee=0, NPle=0, NPlu=0, NPld=0, NPqe=0, NPqu1=0, NPqu8=0, NPqd1=0, NPqd8

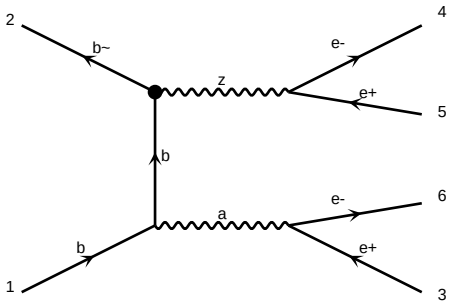

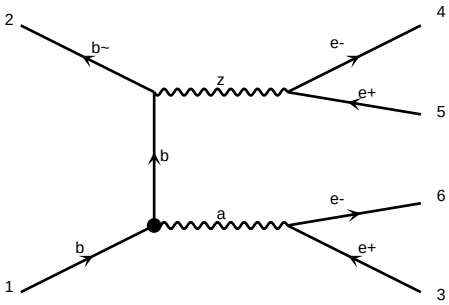

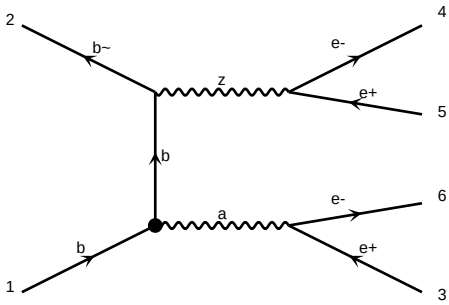

diagram 1561 NP=1, NPcG=0, NPcGtil=0, NPcH=0, NPcHB=0, NPcHDD=0, NPcHW=0, NPcHWB=0, NPcW=0, NPlB=0, NPlH=0, NPlHD=0, NPlHe=0, NPlHl=0, NPlHq=0, NPlHu=0, NPlW=0, NPqG=0, NPqGtil=0, NPqH=0, NPqHB=0, NPqHD=0, NPqHW=0, NPqHWB=0, NPqW=0, QED=2, QNP=2, WEIGHTED=4

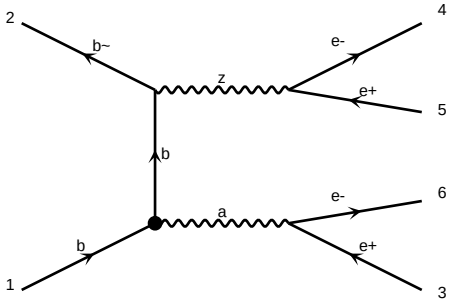

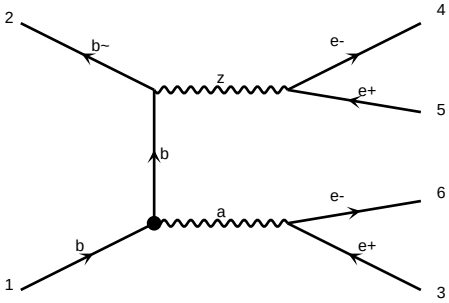

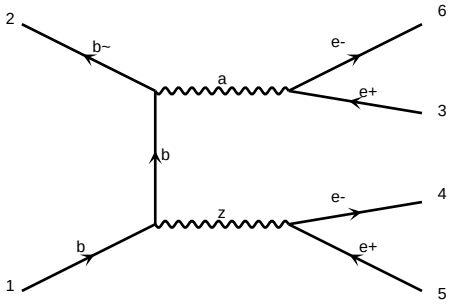

diagram 1564 NP=1, NPcG=0, NPcGtil=0, NPcH=0, NPcHB=0, NPcHDD=0, NPcHW=0, NPcHWB=0, NPcW=0, NPlB=0, NPlH=0, NPlHD=0, NPlHe=0, NPlHl=0, NPlHq=0, NPlHu=0, NPlW=0, NPqG=0, NPqGtil=0, NPqH=0, NPqHB=0, NPqHD=0, NPqHW=0, NPqHWB=0, NPqW=0, QED=2, QNP=2, WEIGHTED=4

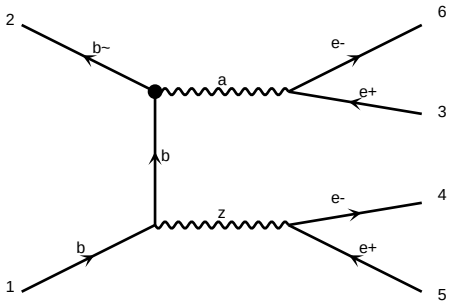

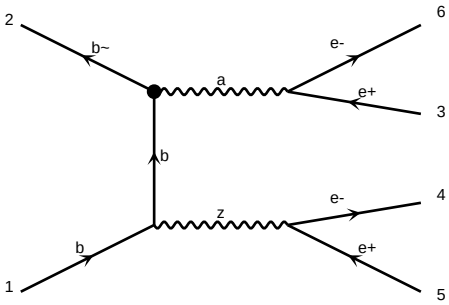

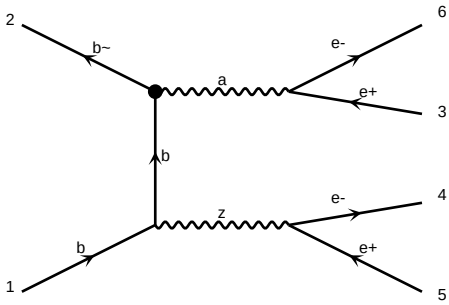

diagram 1567 NP=1, NPcG=0, NPcGtil=0, NPcH=0, NPcHB=0, NPcHDD=0, NPcHW=0, NPcHWB=0, NPcW=0, NPlB=0, NPlH=0, NPlHD=0, NPlHe=0, NPlHl=0, NPlHq=0, NPlHu=0, NPlW=0, NPqG=0, NPqGtil=0, NPqH=0, NPqHB=0, NPqHD=0, NPqHW=0, NPqHWB=0, NPqW=0, QED=2, QNP=2, WEIGHTED=4

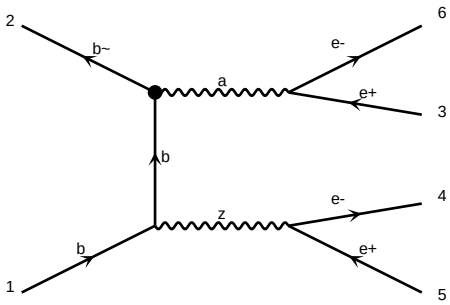

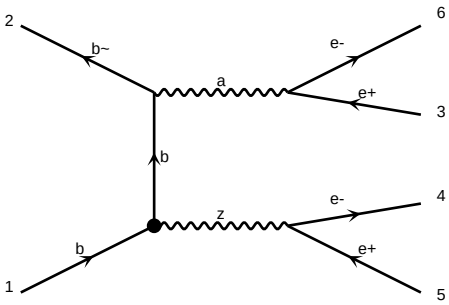

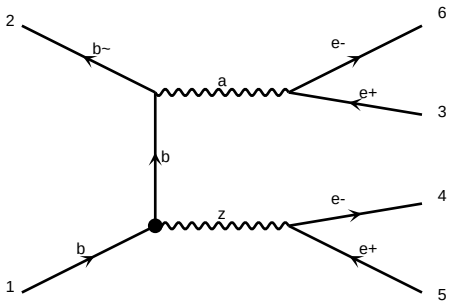

diagram 1570 NP=1, NPcG=0, NPcGtil=0, NPcH=0, NPcHB=0, NPcHDD=0, NPcHW=0, NPcHWB=0, NPcW=0, NPlB=0, NPlH=0, NPlHD=0, NPlHe=0, NPlHl=0, NPlHq=0, NPlHu=0, NPlW=0, NPqG=0, NPqGtil=0, NPqH=0, NPqHB=0, NPqHD=0, NPqHW=0, NPqHWB=0, NPqW=0, QED=2, QNP=2, WEIGHTED=4

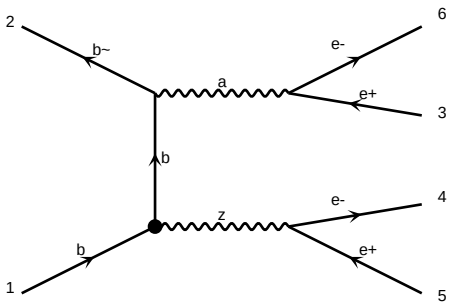

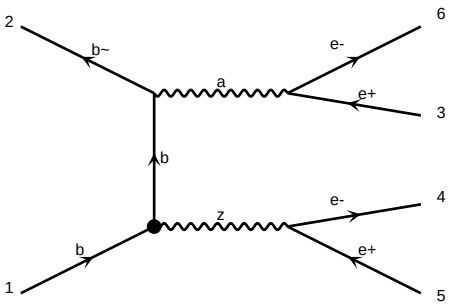

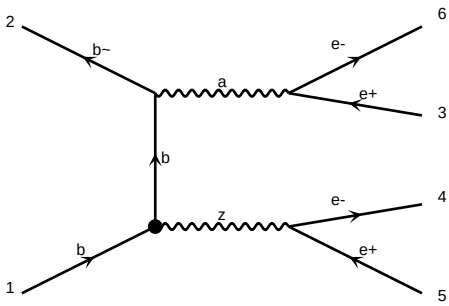

diagram 1573 NP=1, NPcG=0, NPcGtil=0, NPcH=0, NPcHB=0, NPcHDD=0, NPcHW=0, NPcHWB=0, NPcW=0, NPlB=0, NPlH=0, NPlHD=0, NPlHe=0, NPlHl=0, NPlHq=0, NPlHu=0, NPlW=0, NPqG=0, NPqGtil=0, NPqH=0, NPqHB=0, NPqHD=0, NPqHW=0, NPqHWB=0, NPqW=0, QED=2, QNP=2, WEIGHTED=4

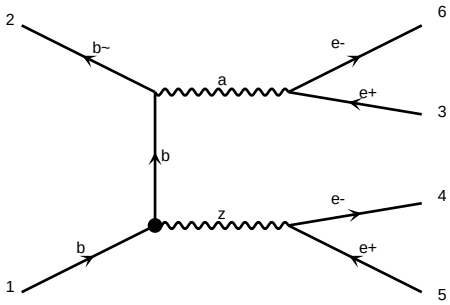

diagram 1576 NP=1, NPcG=0, NPcGtil=0, NPcH=0, NPcHB=0, NPcHDD=0, NPcHW=0, NPcHWB=0, NPcW=0, NPdB=0, NPdBtil=0, NPdG=0, NPdGtil=0, NPdW=0, NPdWtil=0, NPeB=0, NPeH=0, NPeW=0, NPlH1=0, NPlH2=0, NPlHDD=0, NPlL1=0, NPlL2=0, NPlQ1=0, NPlQ3=0, NPlW=0, NPqB=0, NPqBtil=0, NPqG=0, NPqGtil=0, NPqH=0, NPqHDD=0, NPqHW=0, NPqHWB=0, NPqW=0, NPuB=0, NPuBtil=0, NPuG=0, NPuGtil=0, NPuH=0, NPuHDD=0, NPuHW=0, NPuHWB=0, NPuW=0, NPuWtil=0, NPuu1=0, NPuu2=0, NPuu3=0, NPuu4=0, NPuu5=0, NPuu6=0, NPuu7=0, NPuu8=0, NPuu9=0, NPuu10=0, NPuu11=0, NPuu12=0, NPuu13=0, NPuu14=0, NPuu15=0, NPuu16=0, NPuu17=0, NPuu18=0, NPuu19=0, NPuu20=0, NPuu21=0, NPuu22=0, NPuu23=0, NPuu24=0, NPuu25=0, NPuu26=0, NPuu27=0, NPuu28=0, NPuu29=0, NPuu30=0, NPuu31=0, NPuu32=0, NPuu33=0, NPuu34=0, NPuu35=0, NPuu36=0, NPuu37=0, NPuu38=0, NPuu39=0, NPuu40=0,

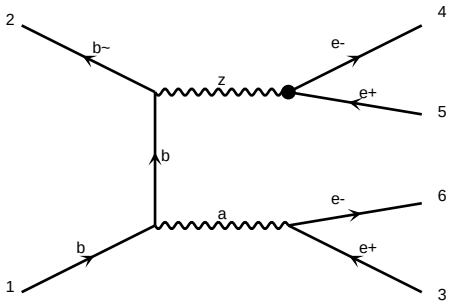

diagram 1591 NP=1, NPcG=0, NPcGtil=0, NPcH=0, NPcHB=0, NPcHDD=0, NPcHW=0, NPcHWB=0, NPcW=0, NPdB=0, NPdW=0, NPlH1=0, NPlH2=0, NPlHB=0, NPlHW=0, NPlL1=0, NPlL2=0, NPlQ1=0, NPlQ3=0, NPlW=0, NPqH=0, NPqtH=0, NPuB=0, NPuG=0, NPuH=0, NPuW=0

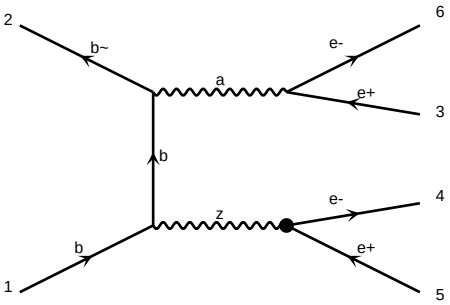

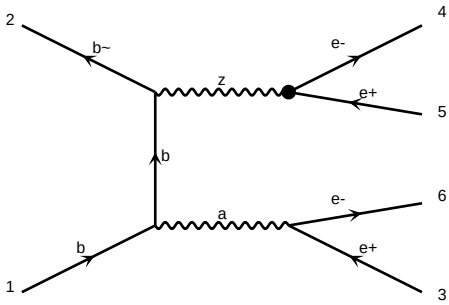

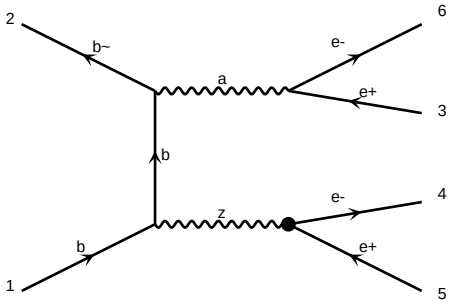

diagram 1594 NP=1, NPcG=0, NPcGtil=0, NPcH=0, NPcHB=0, NPcHDD=0, NPcHW=0, NPcHWB=0, NPcW=0, NPdB=0, NPdW=0, NPlH1=0, NPlH2=0, NPlHB=0, NPlHW=0, NPlL1=0, NPlL2=0, NPlQ1=0, NPlQ3=0, NPlW=0, NPqH=0, NPqtH=0, NPuB=0, NPuG=0, NPuH=0, NPuW=0

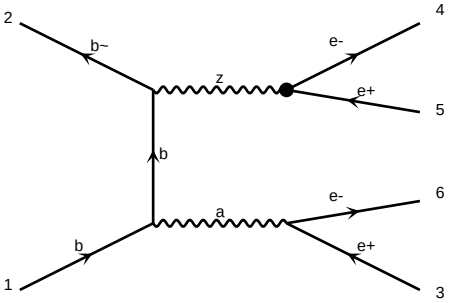

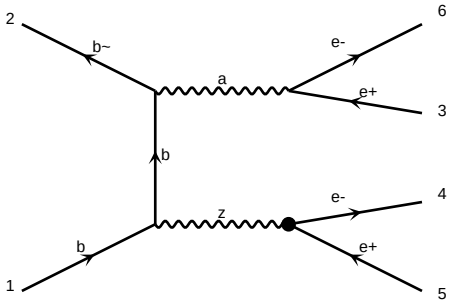

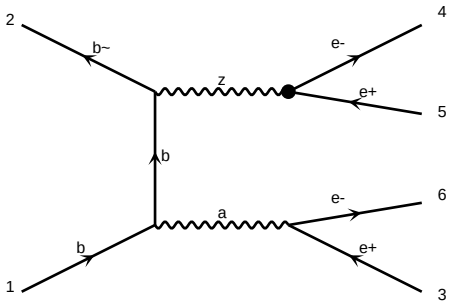

diagram 1597 NP=1, NPcG=0, NPcGtil=0, NPcH=0, NPcHB=0, NPcHDD=0, NPcHW=0, NPcHWB=0, NPcW=0, NPdB=0, NPdW=0, NPlH1=0, NPlH2=0, NPlHB=0, NPlHW=0, NPlL1=0, NPlL2=0, NPlQ1=0, NPlQ3=0, NPlW=0, NPqH=0, NPqtH=0, NPuB=0, NPuG=0, NPuH=0, NPuW=0

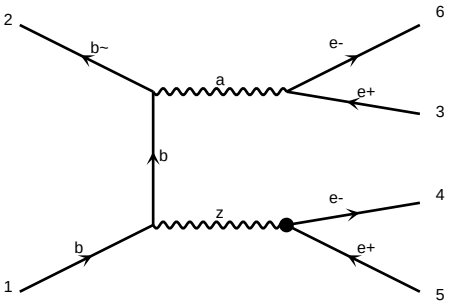

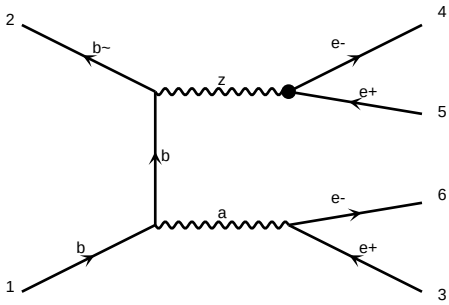

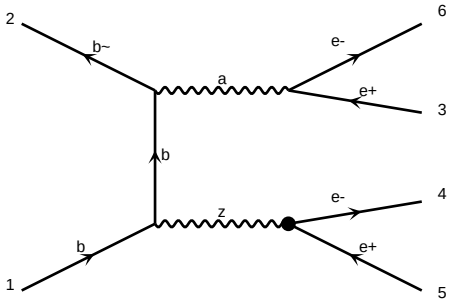

diagram 1600 NP=1, NPcG=0, NPcGtil=0, NPcH=0, NPcHB=0, NPcHDD=0, NPcHW=0, NPcHWB=0, NPcW=0, NPdB=0, NPdW=0, NPlH1=0, NPlH2=0, NPlHB=0, NPlHW=0, NPlL1=0, NPlL2=0, NPlQ1=0, NPlQ3=0, NPlW=0, NPqH=0, NPqtH=0, NPuB=0, NPuG=0, NPuH=0, NPuW=0

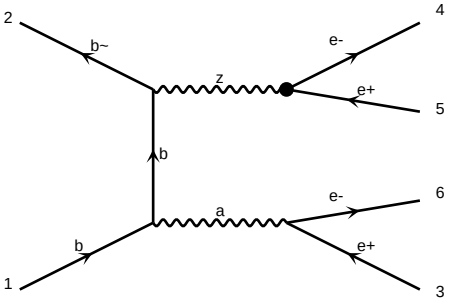

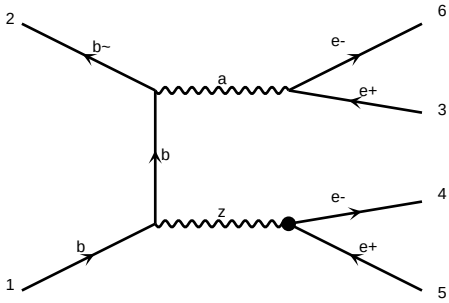

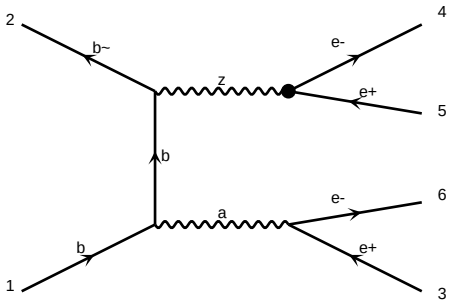

diagram 1603 NP=1, NPcG=0, NPcGtil=0, NPcH=0, NPcHB=0, NPcHDD=0, NPcHW=0, NPcHWB=0, NPcW=0, NPdB=0, NPdW=0, NPlH1=0, NPlH2=0, NPlHB=0, NPlHW=0, NPlL1=0, NPlL2=0, NPlQ1=0, NPlQ3=0, NPlW=0, NPqH=0, NPqtH=0, NPuB=0, NPuG=0, NPuH=0, NPuW=0

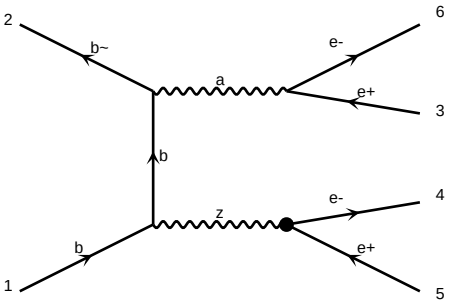

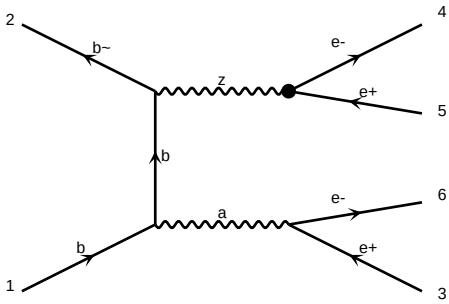

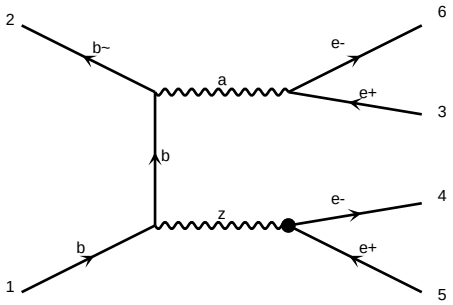

diagram 1606 NP=1, NPcG=0, NPcGtil=0, NPcH=0, NPcHB=0, NPcHDD=0, NPcHW=0, NPcHWB=0, NPcW=0, NPlB=0, NPlH=0, NPlHD=0, NPlHe=0, NPlHl=0, NPlHq=0, NPlHu=0, NPlW=0, NPlWB=0, NPlWe=0, NPlWl=0, NPlWq=0, NPqG=0, NPqH=0, NPqHD=0, NPqHu=0, NPqW=0, NPuG=0, NPuH=0, NPuW=0, QCD=0, QED=2, WEIGHTED=2

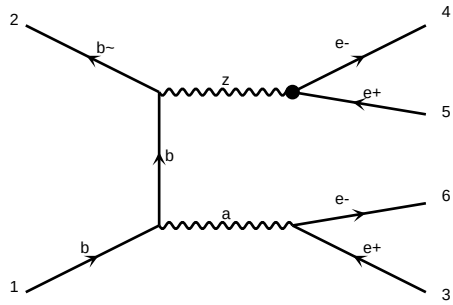

diagram 1607 NP=1, NPcG=0, NPcGtil=0, NPcH=0, NPcHB=0, NPcHDD=0, NPcHW=0, NPcHWB=0, NPcW=0, NPlB=0, NPlH=0, NPlHD=0, NPlHe=0, NPlHl=0, NPlHq=0, NPlHu=0, NPlW=0, NPlWB=0, NPlWe=0, NPlWl=0, NPlWq=0, NPqG=0, NPqH=0, NPqHD=0, NPqHu=0, NPqW=0, NPuG=0, NPuH=0, NPuW=0, QCD=0, QED=2, WEIGHTED=2

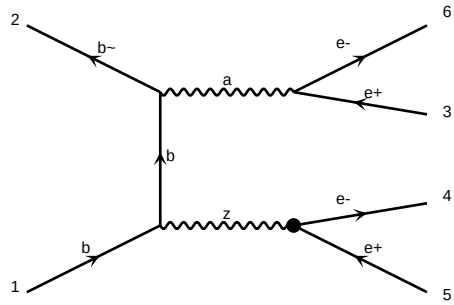

diagram 1608 NP=1, NPcG=0, NPcGtil=0, NPcH=0, NPcHB=0, NPcHDD=0, NPcHW=0, NPcHWB=0, NPcW=0, NPlB=0, NPlH=0, NPlHD=0, NPlHe=0, NPlHl=0, NPlHq=0, NPlHu=0, NPlW=0, NPlWB=0, NPlWe=0, NPlWl=0, NPlWq=0, NPqG=0, NPqH=0, NPqHD=0, NPqHu=0, NPqW=0, NPuG=0, NPuH=0, NPuW=0, QCD=0, QED=2, WEIGHTED=2

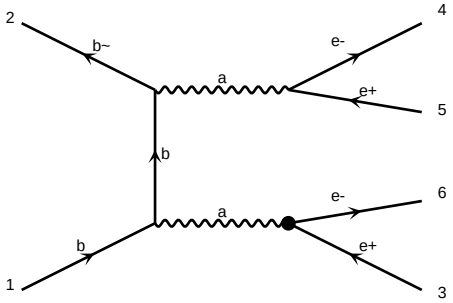

diagram 1609 NP=1, NPcG=0, NPcGtil=0, NPcH=0, NPcHB=0, NPcHDD=0, NPcHW=0, NPcHWB=0, NPcW=0, NPlB=0, NPlH=0, NPlHD=0, NPlHe=0, NPlHl=0, NPlHq=0, NPlHu=0, NPlW=0, NPlWB=0, NPlWe=0, NPlWl=0, NPlWq=0, NPqG=0, NPqH=0, NPqHD=0, NPqHu=0, NPqW=0, NPuG=0, NPuH=0, NPuW=0, QCD=0, QED=2, WEIGHTED=2

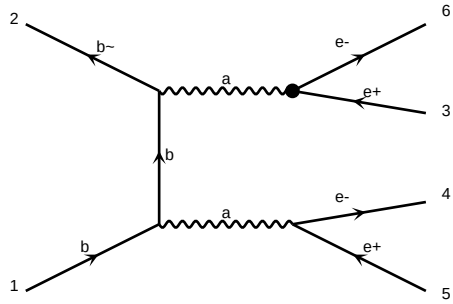

diagram 1610 NP=1, NPcG=0, NPcGtil=0, NPcH=0, NPcHB=0, NPcHDD=0, NPcHW=0, NPcHWB=0, NPcW=0, NPlB=0, NPlH=0, NPlHD=0, NPlHe=0, NPlHl=0, NPlHq=0, NPlHu=0, NPlW=0, NPlWB=0, NPlWe=0, NPlWl=0, NPlWq=0, NPqG=0, NPqH=0, NPqHD=0, NPqHu=0, NPqW=0, NPuG=0, NPuH=0, NPuW=0, QCD=0, QED=2, WEIGHTED=2

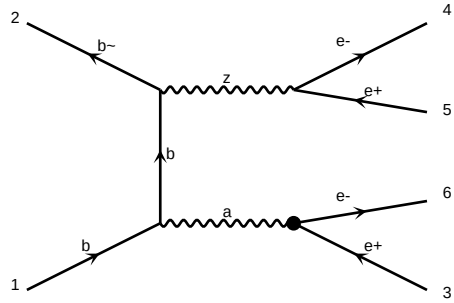

diagram 1611 NP=1, NPcG=0, NPcGtil=0, NPcH=0, NPcHB=0, NPcHDD=0, NPcHW=0, NPcHWB=0, NPcW=0, NPlB=0, NPlH=0, NPlHD=0, NPlHe=0, NPlHl=0, NPlHq=0, NPlHu=0, NPlW=0, NPlWB=0, NPlWe=0, NPlWl=0, NPlWq=0, NPqG=0, NPqH=0, NPqHD=0, NPqHu=0, NPqW=0, NPuG=0, NPuH=0, NPuW=0, QCD=0, QED=2, WEIGHTED=2

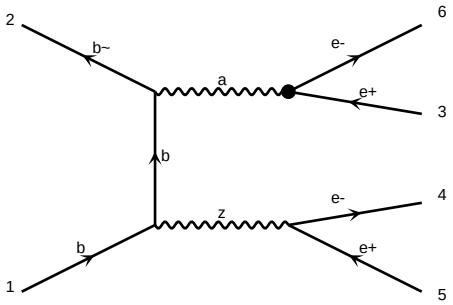

diagram 1612 NP=1, NPcG=0, NPcGtil=0, NPcH=0, NPcHB=0, NPcHDD=0, NPcHW=0, NPcHWB=0, NPcW=0, NPlB=0, NPlH=0, NPlHD=0, NPlHe=0, NPlHl=0, NPlHq=0, NPlHu=0, NPlW=0, NPlWB=0, NPlWe=0, NPlWl=0, NPlWq=0, NPqG=0, NPqH=0, NPqHD=0, NPqHu=0, NPqW=0, NPuG=0, NPuH=0, NPuW=0, QCD=0, QED=2, WEIGHTED=2

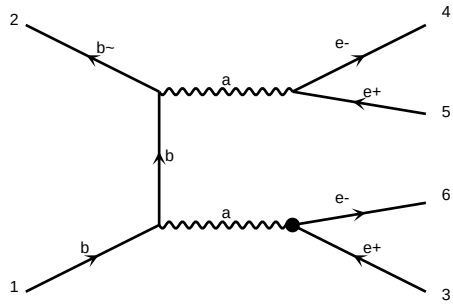

diagram 1613 NP=1, NPcG=0, NPcGtil=0, NPcH=0, NPcHB=0, NPcHDD=0, NPcHW=0, NPcHWB=0, NPcW=0, NPlB=0, NPlH=0, NPlHD=0, NPlHe=0, NPlHl=0, NPlHq=0, NPlHu=0, NPlW=0, NPlWB=0, NPlWe=0, NPlWl=0, NPlWq=0, NPqG=0, NPqH=0, NPqHD=0, NPqHu=0, NPqW=0, NPuG=0, NPuH=0, NPuW=0, QCD=0, QED=2, WEIGHTED=2

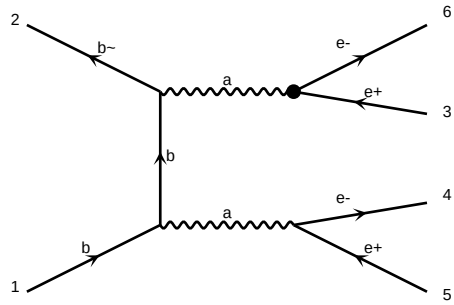

diagram 1614 NP=1, NPcG=0, NPcGtil=0, NPcH=0, NPcHB=0, NPcHDD=0, NPcHW=0, NPcHWB=0, NPcW=0, NPlB=0, NPlH=0, NPlHD=0, NPlHe=0, NPlHl=0, NPlHq=0, NPlHu=0, NPlW=0, NPlWB=0, NPlWe=0, NPlWl=0, NPlWq=0, NPqG=0, NPqH=0, NPqHD=0, NPqHu=0, NPqW=0, NPuG=0, NPuH=0, NPuW=0, QCD=0, QED=2, WEIGHTED=2

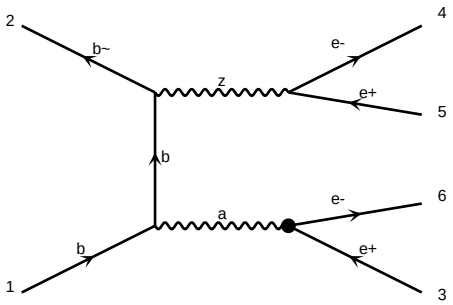

diagram 1615 NP=1, NPcG=0, NPcGtil=0, NPcH=0, NPcHB=0, NPcHDD=0, NPcHW=0, NPcHWB=0, NPcW=0, NPlB=0, NPlH=0, NPlHD=0, NPlHe=0, NPlHl=0, NPlHq=0, NPlHu=0, NPlW=0, NPlWB=0, NPlWe=0, NPlWl=0, NPlWq=0, NPqG=0, NPqH=0, NPqHD=0, NPqHu=0, NPqW=0, NPuG=0, NPuH=0, NPuW=0, QCD=0, QED=2, WEIGHTED=2

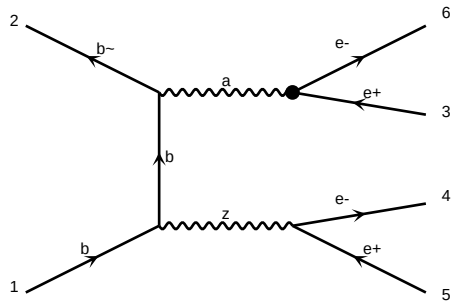

diagram 1616 NP=1, NPcG=0, NPcGtil=0, NPcH=0, NPcHB=0, NPcHDD=0, NPcHW=0, NPcHWB=0, NPcW=0, NPlB=0, NPlH=0, NPlHD=0, NPlHe=0, NPlHl=0, NPlHq=0, NPlHu=0, NPlW=0, NPlWB=0, NPlWe=0, NPlWl=0, NPlWq=0, NPqG=0, NPqH=0, NPqHD=0, NPqHu=0, NPqW=0, NPuG=0, NPuH=0, NPuW=0, QCD=0, QED=2, WEIGHTED=2

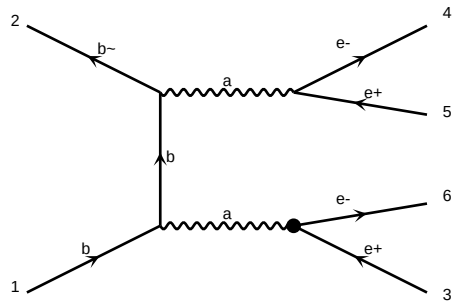

diagram 1617 NP=1, NPcG=0, NPcGtil=0, NPcH=0, NPcHB=0, NPcHDD=0, NPcHW=0, NPcHWB=0, NPcW=0, NPlB=0, NPlH=0, NPlHD=0, NPlHe=0, NPlHl=0, NPlHq=0, NPlHu=0, NPlW=0, NPlWB=0, NPlWe=0, NPlWl=0, NPlWq=0, NPqG=0, NPqH=0, NPqHD=0, NPqHu=0, NPqW=0, NPuG=0, NPuH=0, NPuW=0, QCD=0, QED=2, WEIGHTED=2

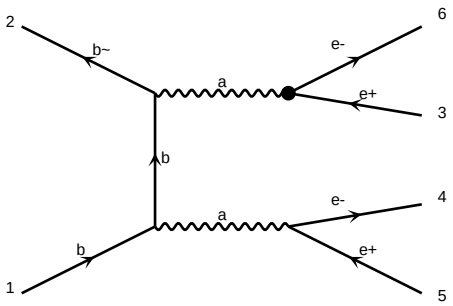

diagram 1618 NP=1, NPcG=0, NPcGtil=0, NPcH=0, NPcHB=0, NPcHDD=0, NPcHW=0, NPcHWB=0, NPcW=0, NPlB=0, NPlH=0, NPlHD=0, NPlHe=0, NPlHl=0, NPlHq=0, NPlHu=0, NPlW=0, NPlWB=0, NPlWe=0, NPlWl=0, NPlWq=0, NPqG=0, NPqH=0, NPqHD=0, NPqHu=0, NPqW=0, NPuG=0, NPuH=0, NPuW=0, QCD=0, QED=2, WEIGHTED=2

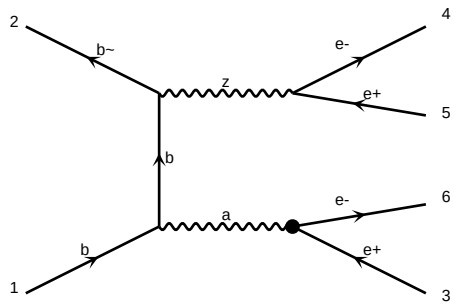

diagram 1619 NP=1, NPcG=0, NPcGtil=0, NPcH=0, NPcHB=0, NPcHDD=0, NPcHW=0, NPcHWB=0, NPcW=0, NPlB=0, NPlH=0, NPlHD=0, NPlHe=0, NPlHl=0, NPlHq=0, NPlHu=0, NPlW=0, NPlWB=0, NPlWe=0, NPlWl=0, NPlWq=0, NPqG=0, NPqH=0, NPqHD=0, NPqHu=0, NPqW=0, NPuG=0, NPuH=0, NPuW=0, QCD=0, QED=2, WEIGHTED=2

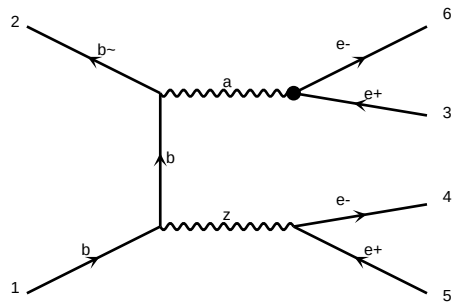

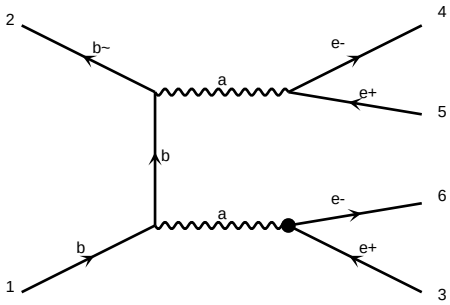

diagram 1621 NP=1, NPcG=0, NPcGtil=0, NPcH=0, NPcHB=0, NPcHDD=0, NPcHW=0, NPcHWB=0, NPcW=0, NPdcHBtil=0, NPdcHW=0, NPdcHWtil=0, NPlHQ3=0, NPlHQ3i=0, NPlHl=0, NPlHl3=0, NPlHu=0, NPlHud=0, NPlHud1=0, NPlHud8=0, NPlHudi=0, NPlHudi8=0, NPlQ=0, NPlQ3=0, NPlQ3i=0, NPlQi=0, NPlu=0, NPlu8=0, NPlud=0, NPlud8=0, NPqHu=0, NPqHu8=0, NPqHud=0, NPqHud8=0, NPqHudi=0, NPqHudi8=0, NPqQ=0, NPqQ3=0, NPqQ3i=0, NPqQi=0, NPqu=0, NPqu8=0, NPqud=0, NPqud8=0, NPquqd1=0, NPquqd11=0, NPquqd18=0, NPquqd1i=0, NPquqd1i1=0, NPquqd1i8=0, NPquqd8=0, NPquqd81=0, NPquqd88=0, NPquqd8i=0, NPquqd8i1=0, NPquqd8i8=0, NPtHu=0, NPtHu8=0, NPtHud=0, NPtHud8=0, NPtHudi=0, NPtHudi8=0, NPtQ=0, NPtQ3=0, NPtQ3i=0, NPtQi=0, NPtu=0, NPtu8=0, NPtud=0, NPtud8=0, NPuHQ=0, NPuHQ3=0, NPuHQ3i=0, NPuHQi=0, NPuHl=0, NPuHl3=0, NPuHu=0, NPuHud=0, NPuHud1=0, NPuHud8=0, NPuHudi=0, NPuHudi8=0, NPuQ=0, NPuQ3=0, NPuQ3i=0, NPuQi=0, NPuu=0, NPuu1=0, NPuu8=0, NPuud=0, NPuud1=0, NPuud8=0, NPuuti=0, NPuuti1=0, NPuuti8=0, NPuutij=0, NPuutij1=0, NPuutij8=0, NPuutit=0, NPuutit1=0, NPuutit8=0, NPuutitj=0, NPuutitj1=0, NPuutitj8=0, NPuuu=0, NPuuu1=0, NPuuu8=0, NP^2==1, NP^2==2, NP^2==3, NP^2==4, NP^2==5, NP^2==6, NP^2==7, NP^2==8, NP^2==9, NP^2==10, NP^2==11, NP^2==12, NP^2==13, NP^2==14, NP^2==15, NP^2==16, NP^2==17, NP^2==18, NP^2==19, NP^2==20, NP^2==21, NP^2==22, NP^2==23, NP^2==24, NP^2==25, NP^2==26, NP^2==27, NP^2==28, NP^2==29, NP^2==30, NP^2==31, NP^2==32, NP^2==33, NP^2==34, NP^2==35, NP^2==36, NP^2==37, NP^2==38, NP^2==39, NP^2==40,

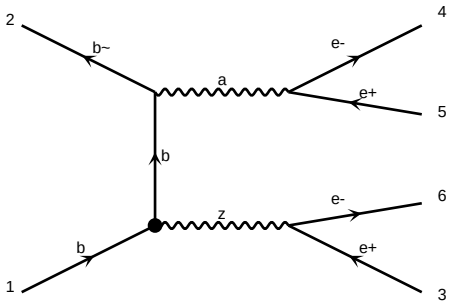

diagram 1636 NP=1, NPcG=0, NPcGtil=0, NPcH=0, NPcHB=0, NPcHDD=0, NPcHW=0, NPcHWB=0, NPcW=0, NPlB=0, NPlH=0, NPlHD=0, NPlHe=0, NPlHl=0, NPlHq=0, NPlHu=0, NPlW=0, NPlWH=0, NPlWq=0, NPuB=0, NPuH=0, NPuW=0, NPuWH=0, NPuWq=0, NPqB=0, NPqH=0, NPqW=0, NPqWH=0, NPqq1=0, NPqq3=0, NPqu1=0, NPqu8=0, NPqd1=0, NPqd8=0, NPqe=0, NPlq1=0, NPlq3=0, NPle=0, NPlu=0, NPld=0, NPeu=0, NPed=0, NPqeu=0, NPqed=0, NPlequ1=0, NPlequ3=0, NPquu1=0, NPquu8=0, NPqdd1=0, NPqdd8=0, NPlud=0, NPqqq1=0, NPqqq3=0, NPllq1=0, NPllq3=0, NPlle=0, NPlld=0, NPqqu1=0, NPqqu8=0, NPqqd1=0, NPqqd8=0, NPlqu1=0, NPlqu3=0, NPlqd1=0, NPlqd8=0, NPeeu=0, NPedd=0, NPleu=0, NPled=0, NPlqe=0, NPuuu1=0, NPuuu8=0, NPddd1=0, NPddd8=0, NPuud1=0, NPuud8=0, NPqqqq1=0, NPqqqq3=0, NPqqqu1=0, NPqqqu8=0, NPqqqd1=0, NPqqqd8=0, NPqquu1=0, NPqquu8=0, NPqqdd1=0, NPqqdd8=0, NPquud1=0, NPquud8=0, NPlluu=0, NPlldd=0, NPllqu1=0, NPllqu3=0, NPllqd1=0, NPllqd8=0, NPlleu=0, NPlled=0, NPlqqq1=0, NPlqqq3=0, NPlquu1=0, NPlquu8=0, NPlqdd1=0, NPlqdd8=0, NPeeuu=0, NPeedd=0, NPlequ1=0, NPlequ3=0, NPleqd1=0, NPleqd8=0, NPlequd1=0, NPlequd3=0, NPquqd1=0, NPquqd8=0, NPlqud1=0, NPlqud8=0, NPuudd1=0, NPuudd8=0, NPlqqu1=0, NPlqqu3=0, NPlqqd1=0, NPlqqd8=0, NPeequ1=0, NPeequ3=0, NPequd1=0, NPequd3=0, NPlqqqe=0, NPlluue=0, NPlleqd1=0, NPlleqd8=0, NPlequu1=0, NPlequu3=0, NPlqqqd1=0, NPlqqqd8=0, NPlqquu1=0, NPlqquu8=0, NPlqqdd1=0, NPlqqdd8=0, NPlquud1=0, NPlquud8=0, NPeequd1=0, NPeequd3=0, NPlqqqu1=0, NPlqqq

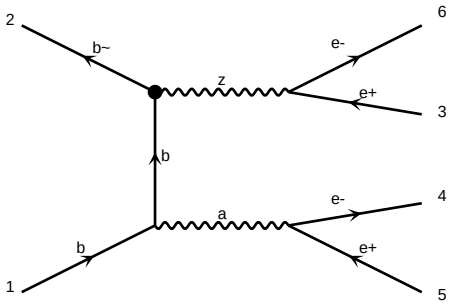

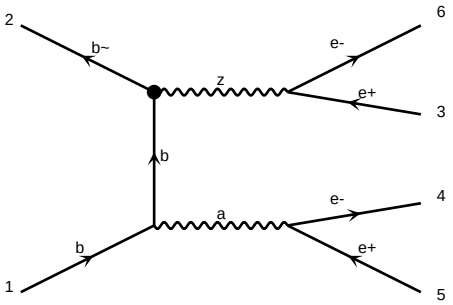

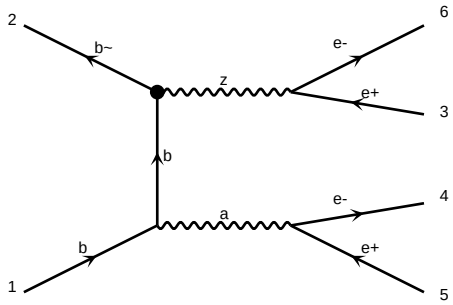

diagram 1651 NP=1, NPcG=0, NPcGtil=0, NPcH=0, NPcHB=0, NPcHDD=0, NPcHW=0, NPcHWB=0, NPcW=0, NPlB=0, NPlH=0, NPlHD=0, NPlHe=0, NPlHl=0, NPlHq=0, NPlHu=0, NPlW=0, NPqH=0, NPuG=0, NPuH=0, QED=2, QNP=2, WEIGHTED=4

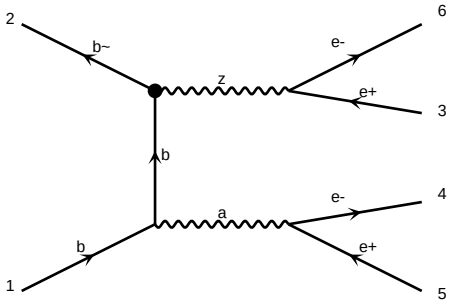

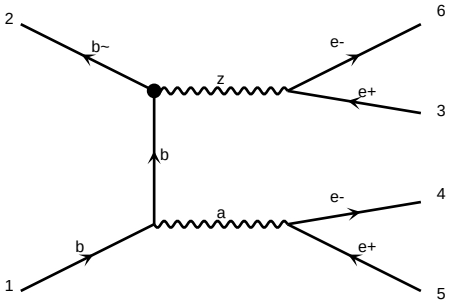

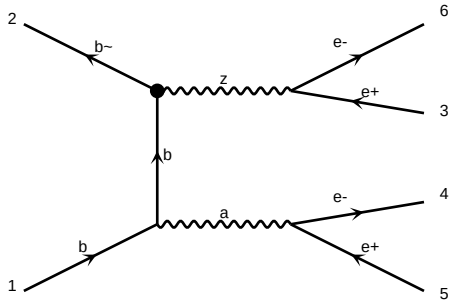

diagram 1654 NP=1, NPcG=0, NPcGtil=0, NPcH=0, NPcHB=0, NPcHDD=0, NPcHW=0, NPcHWB=0, NPcW=0, NPlB=0, NPlH=0, NPlHD=0, NPlHe=0, NPlHl=0, NPlHq=0, NPlHu=0, NPlW=0, NPqH=0, NPuG=0, NPuH=0, QED=2, QNP=2, WEIGHTED=4

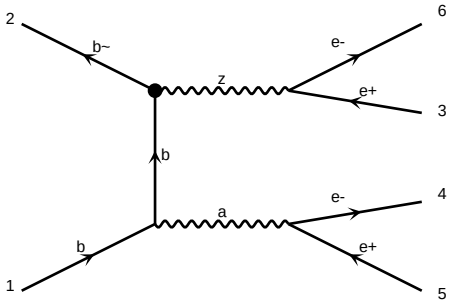

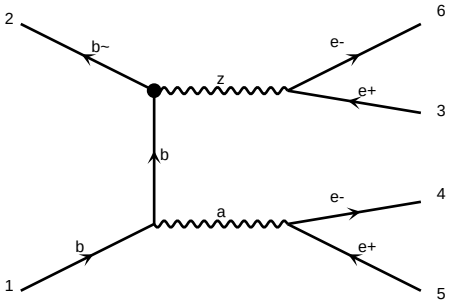

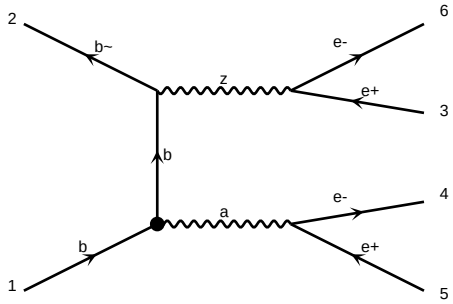

diagram 1657 NP=1, NPcG=0, NPcGtil=0, NPcH=0, NPcHB=0, NPcHDD=0, NPcHW=0, NPcHWB=0, NPcW=0, NPlB=0, NPlH=0, NPlHD=0, NPlHe=0, NPlHl=0, NPlHq=0, NPlHu=0, NPlW=0, NPqH=0, NPuG=0, NPuH=0, QED=2, QNP=2, WEIGHTED=4

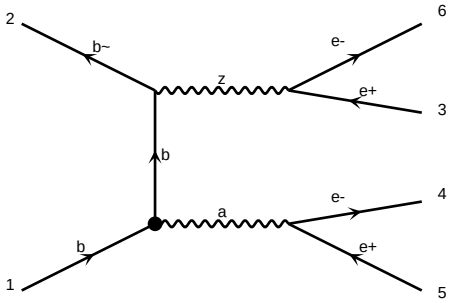

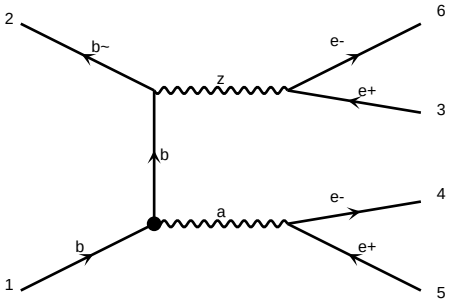

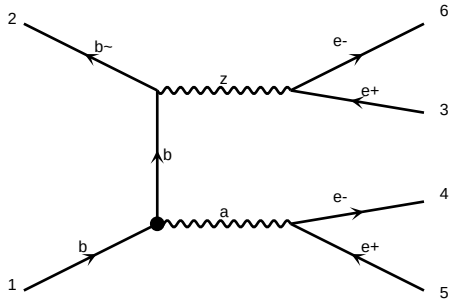

diagram 1660 NP=1, NPcG=0, NPcGtil=0, NPcH=0, NPcHB=0, NPcHDD=0, NPcHW=0, NPcHWB=0, NPcW=0, NPlB=0, NPlH=0, NPlHD=0, NPlHe=0, NPlHl=0, NPlHq=0, NPlHu=0, NPlW=0, NPqH=0, NPuG=0, NPuH=0, QED=2, QNP=2, WEIGHTED=4

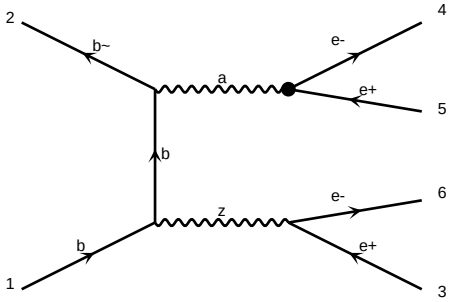

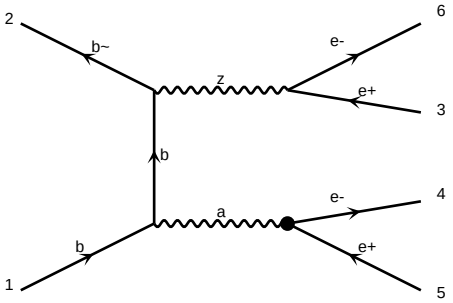

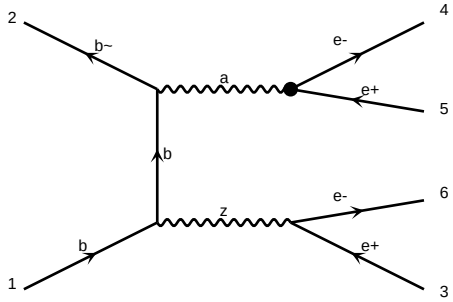

diagram 1663 NP=1, NPcG=0, NPcGtil=0, NPcH=0, NPcHB=0, NPcHDD=0, NPcHW=0, NPcHWB=0, NPcW=0, NPlB=0, NPlH=0, NPlHD=0, NPlHe=0, NPlHl=0, NPlHq=0, NPlHu=0, NPlW=0, NPqH=0, NPuG=0, NPuH=0, QED=2, QNP=2, WEIGHTED=4

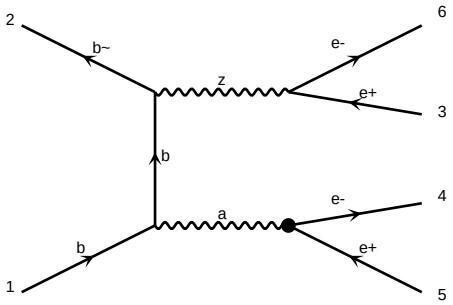

diagram 1666 NP=1, NPcG=0, NPcGtil=0, NPcH=0, NPcHB=0, NPcHDD=0, NPcHW=0, NPcHWB=0, NPcW=0, NPlB=0, NPlH=0, NPlHD=0, NPlHe=0, NPlHl=0, NPlHq=0, NPlHu=0, NPlW=0, NPlWB=0, NPlWH=0, NPlWq=0, NPlWu=0, NPlqq1=0, NPlqq3=0, NPlqu1=0, NPlqu8=0, NPlu=0, NPqB=0, NPqH=0, NPqHD=0, NPqHe=0, NPqHl=0, NPqHq=0, NPqHu=0, NPqW=0, NPqWB=0, NPqWH=0, NPqWq=0, NPqWu=0, NPqqq1=0, NPqqq3=0, NPqqu1=0, NPqqu8=0, NPqu=0, NPuB=0, NPuH=0, NPuHD=0, NPuHe=0, NPuHl=0, NPuHq=0, NPuHu=0, NPuW=0, NPuWB=0, NPuWH=0, NPuWq=0, NPuWu=0, NPuqq1=0, NPuqq3=0, NPuqu1=0, NPuqu8=0, NPuu=0, NPwB=0, NPwH=0, NPwHD=0, NPwHe=0, NPwHl=0, NPwHq=0, NPwHu=0, NPwW=0, NPwWB=0, NPwWH=0, NPwWq=0, NPwWu=0, NPwqq1=0, NPwqq3=0, NPwqu1=0, NPwqu8=0, NPwu=0, QED=2, QNP=1, WEIGHTED<=3

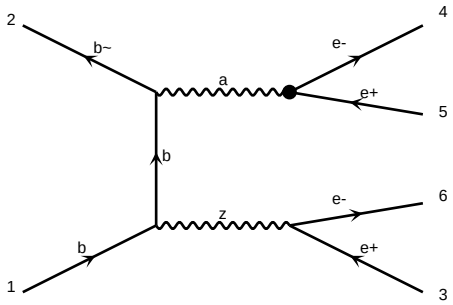

diagram 1667 NP=1, NPcG=0, NPcGtil=0, NPcH=0, NPcHB=0, NPcHDD=0, NPcHW=0, NPcHWB=0, NPcW=0, NPlB=0, NPlH=0, NPlHD=0, NPlHe=0, NPlHl=0, NPlHq=0, NPlHu=0, NPlW=0, NPlWB=0, NPlWH=0, NPlWq=0, NPlWu=0, NPlqq1=0, NPlqq3=0, NPlqu1=0, NPlqu8=0, NPlu=0, NPqB=0, NPqH=0, NPqHD=0, NPqHe=0, NPqHl=0, NPqHq=0, NPqHu=0, NPqW=0, NPqWB=0, NPqWH=0, NPqWq=0, NPqWu=0, NPqqq1=0, NPqqq3=0, NPqqu1=0, NPqqu8=0, NPqu=0, NPuB=0, NPuH=0, NPuHD=0, NPuHe=0, NPuHl=0, NPuHq=0, NPuHu=0, NPuW=0, NPuWB=0, NPuWH=0, NPuWq=0, NPuWu=0, NPuqq1=0, NPuqq3=0, NPuqu1=0, NPuqu8=0, NPuu=0, NPwB=0, NPwH=0, NPwHD=0, NPwHe=0, NPwHl=0, NPwHq=0, NPwHu=0, NPwW=0, NPwWB=0, NPwWH=0, NPwWq=0, NPwWu=0, NPwqq1=0, NPwqq3=0, NPwqu1=0, NPwqu8=0, NPwu=0, QED=2, QNP=1, WEIGHTED<=3

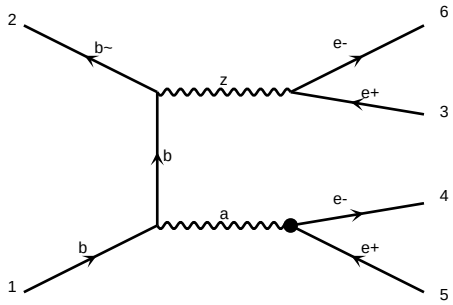

diagram 1668 NP=1, NPcG=0, NPcGtil=0, NPcH=0, NPcHB=0, NPcHDD=0, NPcHW=0, NPcHWB=0, NPcW=0, NPlB=0, NPlH=0, NPlHD=0, NPlHe=0, NPlHl=0, NPlHq=0, NPlHu=0, NPlW=0, NPlWB=0, NPlWH=0, NPlWq=0, NPlWu=0, NPlqq1=0, NPlqq3=0, NPlqu1=0, NPlqu8=0, NPlu=0, NPqB=0, NPqH=0, NPqHD=0, NPqHe=0, NPqHl=0, NPqHq=0, NPqHu=0, NPqW=0, NPqWB=0, NPqWH=0, NPqWq=0, NPqWu=0, NPqqq1=0, NPqqq3=0, NPqqu1=0, NPqqu8=0, NPqu=0, NPuB=0, NPuH=0, NPuHD=0, NPuHe=0, NPuHl=0, NPuHq=0, NPuHu=0, NPuW=0, NPuWB=0, NPuWH=0, NPuWq=0, NPuWu=0, NPuqq1=0, NPuqq3=0, NPuqu1=0, NPuqu8=0, NPuu=0, NPwB=0, NPwH=0, NPwHD=0, NPwHe=0, NPwHl=0, NPwHq=0, NPwHu=0, NPwW=0, NPwWB=0, NPwWH=0, NPwWq=0, NPwWu=0, NPwqq1=0, NPwqq3=0, NPwqu1=0, NPwqu8=0, NPwu=0, QED=2, QNP=1, WEIGHTED<=3

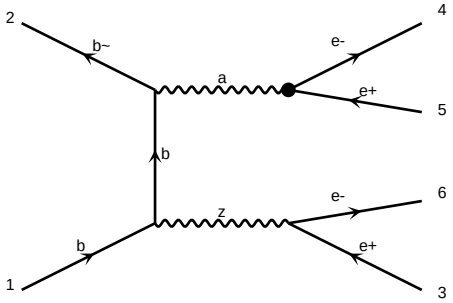

diagram 1669 NP=1, NPcG=0, NPcGtil=0, NPcH=0, NPcHB=0, NPcHDD=0, NPcHW=0, NPcHWB=0, NPcW=0, NPlB=0, NPlH=0, NPlHD=0, NPlHe=0, NPlHl=0, NPlHq=0, NPlHu=0, NPlW=0, NPlWB=0, NPlWH=0, NPlWq=0, NPlWu=0, NPlqq1=0, NPlqq3=0, NPlqu1=0, NPlqu8=0, NPlu=0, NPqB=0, NPqH=0, NPqHD=0, NPqHe=0, NPqHl=0, NPqHq=0, NPqHu=0, NPqW=0, NPqWB=0, NPqWH=0, NPqWq=0, NPqWu=0, NPqqq1=0, NPqqq3=0, NPqqu1=0, NPqqu8=0, NPqu=0, NPuB=0, NPuH=0, NPuHD=0, NPuHe=0, NPuHl=0, NPuHq=0, NPuHu=0, NPuW=0, NPuWB=0, NPuWH=0, NPuWq=0, NPuWu=0, NPuqq1=0, NPuqq3=0, NPuqu1=0, NPuqu8=0, NPuu=0, NPwB=0, NPwH=0, NPwHD=0, NPwHe=0, NPwHl=0, NPwHq=0, NPwHu=0, NPwW=0, NPwWB=0, NPwWH=0, NPwWq=0, NPwWu=0, NPwqq1=0, NPwqq3=0, NPwqu1=0, NPwqu8=0, NPwu=0, QED=2, QNP=1, WEIGHTED<=3

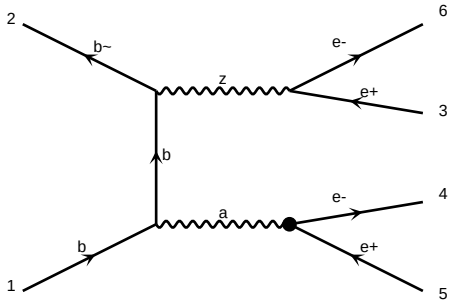

diagram 1670 NP=1, NPcG=0, NPcGtil=0, NPcH=0, NPcHB=0, NPcHDD=0, NPcHW=0, NPcHWB=0, NPcW=0, NPlB=0, NPlH=0, NPlHD=0, NPlHe=0, NPlHl=0, NPlHq=0, NPlHu=0, NPlW=0, NPlWB=0, NPlWH=0, NPlWq=0, NPlWu=0, NPlqq1=0, NPlqq3=0, NPlqu1=0, NPlqu8=0, NPlu=0, NPqB=0, NPqH=0, NPqHD=0, NPqHe=0, NPqHl=0, NPqHq=0, NPqHu=0, NPqW=0, NPqWB=0, NPqWH=0, NPqWq=0, NPqWu=0, NPqqq1=0, NPqqq3=0, NPqqu1=0, NPqqu8=0, NPqu=0, NPuB=0, NPuH=0, NPuHD=0, NPuHe=0, NPuHl=0, NPuHq=0, NPuHu=0, NPuW=0, NPuWB=0, NPuWH=0, NPuWq=0, NPuWu=0, NPuqq1=0, NPuqq3=0, NPuqu1=0, NPuqu8=0, NPuu=0, NPwB=0, NPwH=0, NPwHD=0, NPwHe=0, NPwHl=0, NPwHq=0, NPwHu=0, NPwW=0, NPwWB=0, NPwWH=0, NPwWq=0, NPwWu=0, NPwqq1=0, NPwqq3=0, NPwqu1=0, NPwqu8=0, NPwu=0, QED=2, QNP=1, WEIGHTED<=3

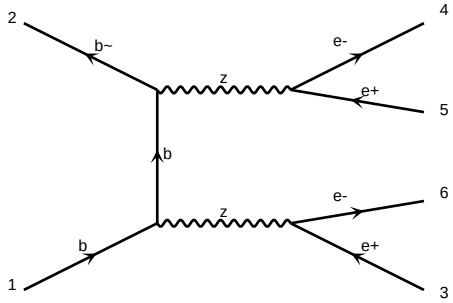

diagram 1671 NP=1, NPcG=0, NPcGtil=0, NPcH=0, NPcHB=0, NPcHDD=0, NPcHW=0, NPcHWB=0, NPcW=0, NPlB=0, NPlH=0, NPlHD=0, NPlHe=0, NPlHl=0, NPlHq=0, NPlHu=0, NPlW=0, NPlWB=0, NPlWH=0, NPlWq=0, NPlWu=0, NPlqq1=0, NPlqq3=0, NPlqu1=0, NPlqu8=0, NPlu=0, NPqB=0, NPqH=0, NPqHD=0, NPqHe=0, NPqHl=0, NPqHq=0, NPqHu=0, NPqW=0, NPqWB=0, NPqWH=0, NPqWq=0, NPqWu=0, NPqqq1=0, NPqqq3=0, NPqqu1=0, NPqqu8=0, NPqu=0, NPuB=0, NPuH=0, NPuHD=0, NPuHe=0, NPuHl=0, NPuHq=0, NPuHu=0, NPuW=0, NPuWB=0, NPuWH=0, NPuWq=0, NPuWu=0, NPuqq1=0, NPuqq3=0, NPuqu1=0, NPuqu8=0, NPuu=0, NPwB=0, NPwH=0, NPwHD=0, NPwHe=0, NPwHl=0, NPwHq=0, NPwHu=0, NPwW=0, NPwWB=0, NPwWH=0, NPwWq=0, NPwWu=0, NPwqq1=0, NPwqq3=0, NPwqu1=0, NPwqu8=0, NPwu=0, QED=2, QNP=1, WEIGHTED<=3

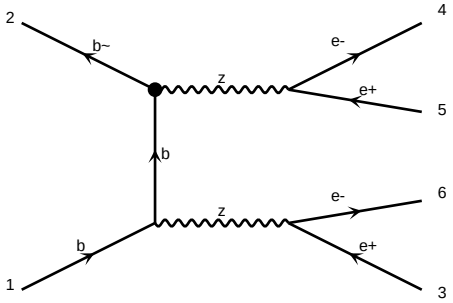

diagram 1672 NP=1, NPcG=0, NPcGtil=0, NPcH=0, NPcHB=0, NPcHDD=0, NPcHW=0, NPcHWB=0, NPcW=0, NPlB=0, NPlH=0, NPlHD=0, NPlHe=0, NPlHl=0, NPlHq=0, NPlHu=0, NPlW=0, NPlWB=0, NPlWH=0, NPlWq=0, NPlWu=0, NPlqq1=0, NPlqq3=0, NPlqu1=0, NPlqu8=0, NPlu=0, NPqB=0, NPqH=0, NPqHD=0, NPqHe=0, NPqHl=0, NPqHq=0, NPqHu=0, NPqW=0, NPqWB=0, NPqWH=0, NPqWq=0, NPqWu=0, NPqqq1=0, NPqqq3=0, NPqqu1=0, NPqqu8=0, NPqu=0, NPuB=0, NPuH=0, NPuHD=0, NPuHe=0, NPuHl=0, NPuHq=0, NPuHu=0, NPuW=0, NPuWB=0, NPuWH=0, NPuWq=0, NPuWu=0, NPuqq1=0, NPuqq3=0, NPuqu1=0, NPuqu8=0, NPuu=0, NPwB=0, NPwH=0, NPwHD=0, NPwHe=0, NPwHl=0, NPwHq=0, NPwHu=0, NPwW=0, NPwWB=0, NPwWH=0, NPwWq=0, NPwWu=0, NPwqq1=0, NPwqq3=0, NPwqu1=0, NPwqu8=0, NPwu=0, QED=2, QNP=1, WEIGHTED<=3

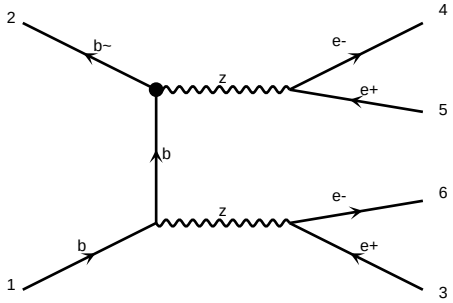

diagram 1673 NP=1, NPcG=0, NPcGtil=0, NPcH=0, NPcHB=0, NPcHDD=0, NPcHW=0, NPcHWB=0, NPcW=0, NPlB=0, NPlH=0, NPlHD=0, NPlHe=0, NPlHl=0, NPlHq=0, NPlHu=0, NPlW=0, NPlWB=0, NPlWH=0, NPlWq=0, NPlWu=0, NPlqq1=0, NPlqq3=0, NPlqu1=0, NPlqu8=0, NPlu=0, NPqB=0, NPqH=0, NPqHD=0, NPqHe=0, NPqHl=0, NPqHq=0, NPqHu=0, NPqW=0, NPqWB=0, NPqWH=0, NPqWq=0, NPqWu=0, NPqqq1=0, NPqqq3=0, NPqqu1=0, NPqqu8=0, NPqu=0, NPuB=0, NPuH=0, NPuHD=0, NPuHe=0, NPuHl=0, NPuHq=0, NPuHu=0, NPuW=0, NPuWB=0, NPuWH=0, NPuWq=0, NPuWu=0, NPuqq1=0, NPuqq3=0, NPuqu1=0, NPuqu8=0, NPuu=0, NPwB=0, NPwH=0, NPwHD=0, NPwHe=0, NPwHl=0, NPwHq=0, NPwHu=0, NPwW=0, NPwWB=0, NPwWH=0, NPwWq=0, NPwWu=0, NPwqq1=0, NPwqq3=0, NPwqu1=0, NPwqu8=0, NPwu=0, QED=2, QNP=1, WEIGHTED<=3

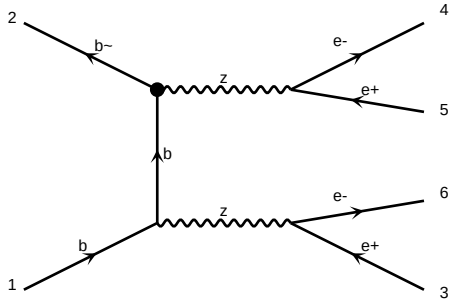

diagram 1674 NP=1, NPcG=0, NPcGtil=0, NPcH=0, NPcHB=0, NPcHDD=0, NPcHW=0, NPcHWB=0, NPcW=0, NPlB=0, NPlH=0, NPlHD=0, NPlHe=0, NPlHl=0, NPlHq=0, NPlHu=0, NPlW=0, NPlWB=0, NPlWH=0, NPlWq=0, NPlWu=0, NPlqq1=0, NPlqq3=0, NPlqu1=0, NPlqu8=0, NPlu=0, NPqB=0, NPqH=0, NPqHD=0, NPqHe=0, NPqHl=0, NPqHq=0, NPqHu=0, NPqW=0, NPqWB=0, NPqWH=0, NPqWq=0, NPqWu=0, NPqqq1=0, NPqqq3=0, NPqqu1=0, NPqqu8=0, NPqu=0, NPuB=0, NPuH=0, NPuHD=0, NPuHe=0, NPuHl=0, NPuHq=0, NPuHu=0, NPuW=0, NPuWB=0, NPuWH=0, NPuWq=0, NPuWu=0, NPuqq1=0, NPuqq3=0, NPuqu1=0, NPuqu8=0, NPuu=0, NPwB=0, NPwH=0, NPwHD=0, NPwHe=0, NPwHl=0, NPwHq=0, NPwHu=0, NPwW=0, NPwWB=0, NPwWH=0, NPwWq=0, NPwWu=0, NPwqq1=0, NPwqq3=0, NPwqu1=0, NPwqu8=0, NPwu=0, QED=2, QNP=1, WEIGHTED<=3

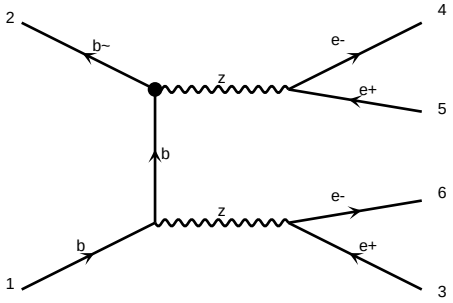

diagram 1675 NP=1, NPcG=0, NPcGtil=0, NPcH=0, NPcHB=0, NPcHDD=0, NPcHW=0, NPcHWB=0, NPcW=0, NPlB=0, NPlH=0, NPlHD=0, NPlHe=0, NPlHl=0, NPlHq=0, NPlHu=0, NPlW=0, NPlWB=0, NPlWH=0, NPlWq=0, NPlWu=0, NPlqq1=0, NPlqq3=0, NPlqu1=0, NPlqu8=0, NPlu=0, NPqB=0, NPqH=0, NPqHD=0, NPqHe=0, NPqHl=0, NPqHq=0, NPqHu=0, NPqW=0, NPqWB=0, NPqWH=0, NPqWq=0, NPqWu=0, NPqqq1=0, NPqqq3=0, NPqqu1=0, NPqqu8=0, NPqu=0, NPuB=0, NPuH=0, NPuHD=0, NPuHe=0, NPuHl=0, NPuHq=0, NPuHu=0, NPuW=0, NPuWB=0, NPuWH=0, NPuWq=0, NPuWu=0, NPuqq1=0, NPuqq3=0, NPuqu1=0, NPuqu8=0, NPuu=0, NPwB=0, NPwH=0, NPwHD=0, NPwHe=0, NPwHl=0, NPwHq=0, NPwHu=0, NPwW=0, NPwWB=0, NPwWH=0, NPwWq=0, NPwWu=0, NPwqq1=0, NPwqq3=0, NPwqu1=0, NPwqu8=0, NPwu=0, QED=2, QNP=1, WEIGHTED<=3

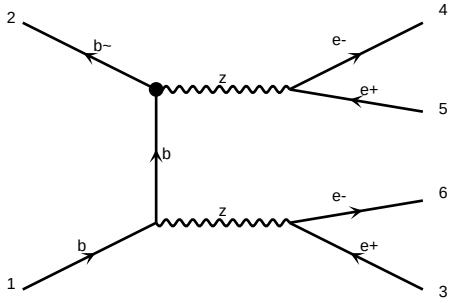

diagram 1676 NP=1, NPcG=0, NPcGtil=0, NPcH=0, NPcHB=0, NPcHDD=0, NPcHW=0, NPcHWB=0, NPcW=0, NPlB=0, NPlH=0, NPlHD=0, NPlHe=0, NPlHl=0, NPlHq=0, NPlHu=0, NPlW=0, NPlWB=0, NPlWH=0, NPlWq=0, NPlWu=0, NPlqq1=0, NPlqq3=0, NPlqu1=0, NPlqu8=0, NPlu=0, NPqB=0, NPqH=0, NPqHD=0, NPqHe=0, NPqHl=0, NPqHq=0, NPqHu=0, NPqW=0, NPqWB=0, NPqWH=0, NPqWq=0, NPqWu=0, NPqqq1=0, NPqqq3=0, NPqqu1=0, NPqqu8=0, NPqu=0, NPuB=0, NPuH=0, NPuHD=0, NPuHe=0, NPuHl=0, NPuHq=0, NPuHu=0, NPuW=0, NPuWB=0, NPuWH=0, NPuWq=0, NPuWu=0, NPuqq1=0, NPuqq3=0, NPuqu1=0, NPuqu8=0, NPuu=0, NPwB=0, NPwH=0, NPwHD=0, NPwHe=0, NPwHl=0, NPwHq=0, NPwHu=0, NPwW=0, NPwWB=0, NPwWH=0, NPwWq=0, NPwWu=0, NPwqq1=0, NPwqq3=0, NPwqu1=0, NPwqu8=0, NPwu=0, QED=2, QNP=1, WEIGHTED<=3

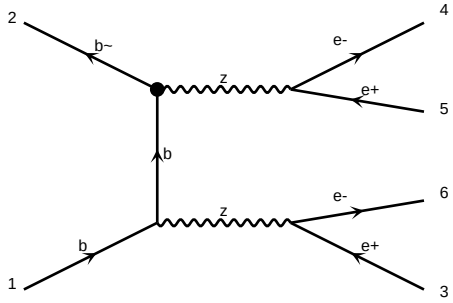

diagram 1677 NP=1, NPcG=0, NPcGtil=0, NPcH=0, NPcHB=0, NPcHDD=0, NPcHW=0, NPcHWB=0, NPcW=0, NPlB=0, NPlH=0, NPlHD=0, NPlHe=0, NPlHl=0, NPlHq=0, NPlHu=0, NPlW=0, NPlWB=0, NPlWH=0, NPlWq=0, NPlWu=0, NPlqq1=0, NPlqq3=0, NPlqu1=0, NPlqu8=0, NPlu=0, NPqB=0, NPqH=0, NPqHD=0, NPqHe=0, NPqHl=0, NPqHq=0, NPqHu=0, NPqW=0, NPqWB=0, NPqWH=0, NPqWq=0, NPqWu=0, NPqqq1=0, NPqqq3=0, NPqqu1=0, NPqqu8=0, NPqu=0, NPuB=0, NPuH=0, NPuHD=0, NPuHe=0, NPuHl=0, NPuHq=0, NPuHu=0, NPuW=0, NPuWB=0, NPuWH=0, NPuWq=0, NPuWu=0, NPuqq1=0, NPuqq3=0, NPuqu1=0, NPuqu8=0, NPuu=0, NPwB=0, NPwH=0, NPwHD=0, NPwHe=0, NPwHl=0, NPwHq=0, NPwHu=0, NPwW=0, NPwWB=0, NPwWH=0, NPwWq=0, NPwWu=0, NPwqq1=0, NPwqq3=0, NPwqu1=0, NPwqu8=0, NPwu=0, QED=2, QNP=1, WEIGHTED<=3

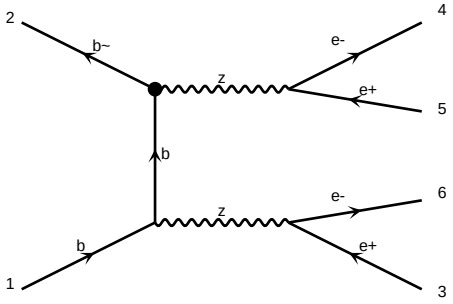

diagram 1678 NP=1, NPcG=0, NPcGtil=0, NPcH=0, NPcHB=0, NPcHDD=0, NPcHW=0, NPcHWB=0, NPcW=0, NPlB=0, NPlH=0, NPlHD=0, NPlHe=0, NPlHl=0, NPlHq=0, NPlHu=0, NPlW=0, NPlWB=0, NPlWH=0, NPlWq=0, NPlWu=0, NPlqq1=0, NPlqq3=0, NPlqu1=0, NPlqu8=0, NPlu=0, NPqB=0, NPqH=0, NPqHD=0, NPqHe=0, NPqHl=0, NPqHq=0, NPqHu=0, NPqW=0, NPqWB=0, NPqWH=0, NPqWq=0, NPqWu=0, NPqqq1=0, NPqqq3=0, NPqqu1=0, NPqqu8=0, NPqu=0, NPuB=0, NPuH=0, NPuHD=0, NPuHe=0, NPuHl=0, NPuHq=0, NPuHu=0, NPuW=0, NPuWB=0, NPuWH=0, NPuWq=0, NPuWu=0, NPuqq1=0, NPuqq3=0, NPuqu1=0, NPuqu8=0, NPuu=0, NPwB=0, NPwH=0, NPwHD=0, NPwHe=0, NPwHl=0, NPwHq=0, NPwHu=0, NPwW=0, NPwWB=0, NPwWH=0, NPwWq=0, NPwWu=0, NPwqq1=0, NPwqq3=0, NPwqu1=0, NPwqu8=0, NPwu=0, QED=2, QNP=1, WEIGHTED<=3

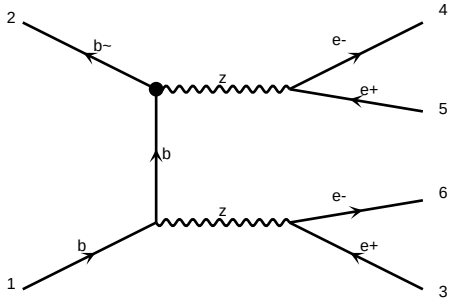

diagram 1679 NP=1, NPcG=0, NPcGtil=0, NPcH=0, NPcHB=0, NPcHDD=0, NPcHW=0, NPcHWB=0, NPcW=0, NPlB=0, NPlH=0, NPlHD=0, NPlHe=0, NPlHl=0, NPlHq=0, NPlHu=0, NPlW=0, NPlWB=0, NPlWH=0, NPlWq=0, NPlWu=0, NPlqq1=0, NPlqq3=0, NPlqu1=0, NPlqu8=0, NPlu=0, NPqB=0, NPqH=0, NPqHD=0, NPqHe=0, NPqHl=0, NPqHq=0, NPqHu=0, NPqW=0, NPqWB=0, NPqWH=0, NPqWq=0, NPqWu=0, NPqqq1=0, NPqqq3=0, NPqqu1=0, NPqqu8=0, NPqu=0, NPuB=0, NPuH=0, NPuHD=0, NPuHe=0, NPuHl=0, NPuHq=0, NPuHu=0, NPuW=0, NPuWB=0, NPuWH=0, NPuWq=0, NPuWu=0, NPuqq1=0, NPuqq3=0, NPuqu1=0, NPuqu8=0, NPuu=0, NPwB=0, NPwH=0, NPwHD=0, NPwHe=0, NPwHl=0, NPwHq=0, NPwHu=0, NPwW=0, NPwWB=0, NPwWH=0, NPwWq=0, NPwWu=0, NPwqq1=0, NPwqq3=0, NPwqu1=0, NPwqu8=0, NPwu=0, QED=2, QNP=1, WEIGHTED<=3

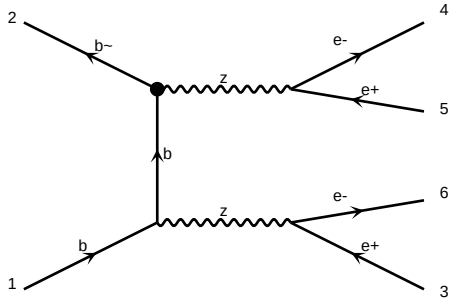

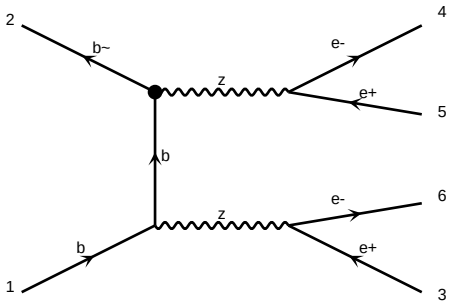

diagram 1681 NP=1, NPcG=0, NPcGtil=0, NPcH=0, NPcHB=0, NPcHDD=0, NPcHW=0, NPcHWB=0, NPcW=0, NPcWtil=0, NPdB=0, NPdBtil=0, NPdG=0, NPdW=0, NPeB=0, NPeH=0, NPeW=0, NPlB=0, NPlH=0, NPlHDD=0, NPlHW=0, NPlHWB=0, NPlW=0, NPlWtil=0, NPuB=0, NPuG=0, NPuH=0, NPuW=0, NPuWtil=0, NPqB=0, NPqG=0, NPqH=0, NPqHB=0, NPqHW=0, NPqW=0, NPqWtil=0, NPquB=0, NPquG=0, NPquHDD=0, NPquW=0, NPquWtil=0, NPqdB=0, NPqdG=0, NPqdHDD=0, NPqdW=0, NPqdWtil=0, NPqlB=0, NPqlHDD=0, NPqlW=0, NPqlWtil=0, NPqeB=0, NPqeHDD=0, NPqeW=0, NPqeWtil=0, NPlqB=0, NPlqG=0, NPlqHDD=0, NPlqW=0, NPlqWtil=0, NPlequB=0, NPlequG=0, NPlequHDD=0, NPlequW=0, NPlequWtil=0, NPlqdB=0, NPlqdG=0, NPlqdHDD=0, NPlqdW=0, NPlqdWtil=0, NPlqlB=0, NPlqlHDD=0, NPlqlW=0, NPlqlWtil=0, NPlqeB=0, NPlqeHDD=0, NPlqeW=0, NPlqeWtil=0, NPeqB=0, NPeqG=0, NPeqHDD=0, NPeqW=0, NPeqWtil

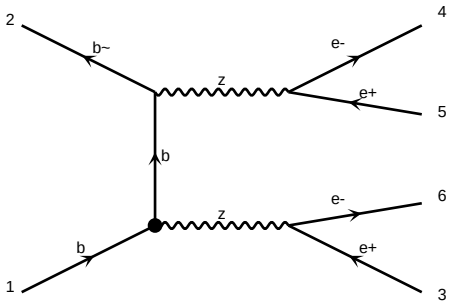

diagram 1696 NP=1, NPcG=0, NPcGtil=0, NPcH=0, NPcHB=0, NPcHDD=0, NPcHW=0, NPcHWB=0, NPcW=0, NPlB=0, NPlHD=0, NPlHe=0, NPlHl=0, NPlHq=0, NPlHu=0, NPlWB=0, NPlWq=0, NPlWu=0, NPqB=0, NPqHD=0, NPqHQ=0, NPqHu=0, NPqW=0, NPuB=0, NPuHD=0, NPuW=0, QCD=0, QED=2, WEIGHTED=4

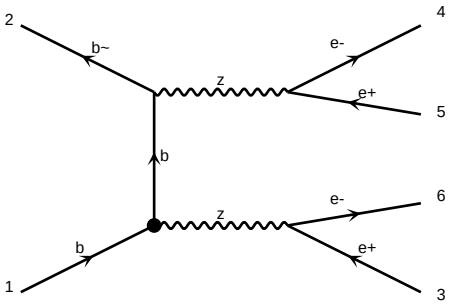

diagram 1697 NP=1, NPcG=0, NPcGtil=0, NPcH=0, NPcHB=0, NPcHDD=0, NPcHW=0, NPcHWB=0, NPcW=0, NPlB=0, NPlHD=0, NPlHe=0, NPlHl=0, NPlHq=0, NPlHu=0, NPlWB=0, NPlWq=0, NPlWu=0, NPqB=0, NPqHD=0, NPqHQ=0, NPqHu=0, NPqW=0, NPuB=0, NPuHD=0, NPuW=0, QCD=0, QED=2, WEIGHTED=4

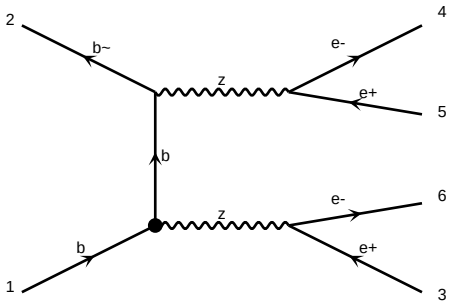

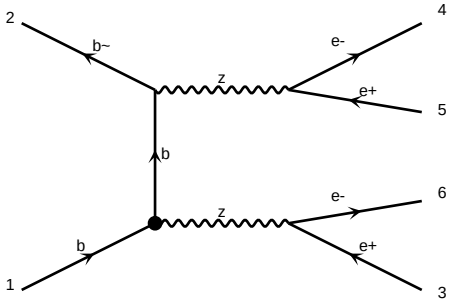

diagram 1699 NP=1, NPcG=0, NPcGtil=0, NPcH=0, NPcHB=0, NPcHDD=0, NPcHW=0, NPcHWB=0, NPcW=0, NPlB=0, NPlHD=0, NPlHe=0, NPlHl=0, NPlHq=0, NPlHu=0, NPlWB=0, NPlWq=0, NPlWu=0, NPqB=0, NPqHD=0, NPqHQ=0, NPqHu=0, NPqW=0, NPuB=0, NPuHD=0, NPuW=0, QCD=0, QED=2, WEIGHTED=4

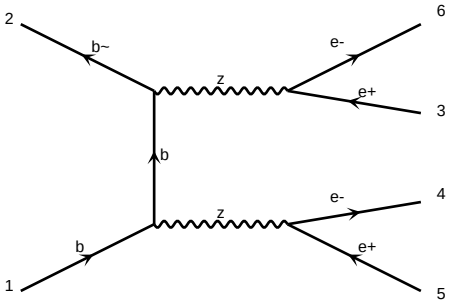

diagram 1700 NP=1, NPcG=0, NPcGtil=0, NPcH=0, NPcHB=0, NPcHDD=0, NPcHW=0, NPcHWB=0, NPcW=0, NPlB=0, NPlHD=0, NPlHe=0, NPlHl=0, NPlHq=0, NPlHu=0, NPlWB=0, NPlWq=0, NPlWu=0, NPqB=0, NPqHD=0, NPqHQ=0, NPqHu=0, NPqW=0, NPuB=0, NPuHD=0, NPuW=0, QCD=0, QED=2, WEIGHTED=4

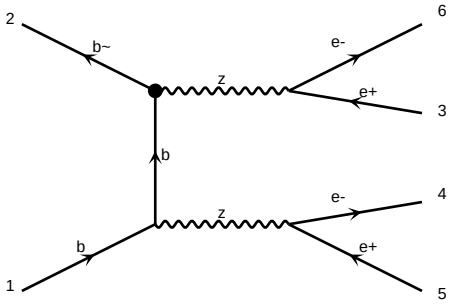

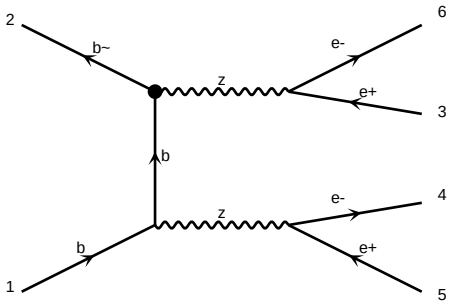

diagram 1702 NP=1, NPcG=0, NPcGtil=0, NPcH=0, NPcHB=0, NPcHDD=0, NPcHW=0, NPcHWB=0, NPcW=0, NPlB=0, NPlHD=0, NPlHe=0, NPlHl=0, NPlHq=0, NPlHu=0, NPlWB=0, NPlWq=0, NPlWu=0, NPqB=0, NPqHD=0, NPqHQ=0, NPqHu=0, NPqW=0, NPuB=0, NPuHD=0, NPuW=0, QCD=0, QED=2, WEIGHTED=4

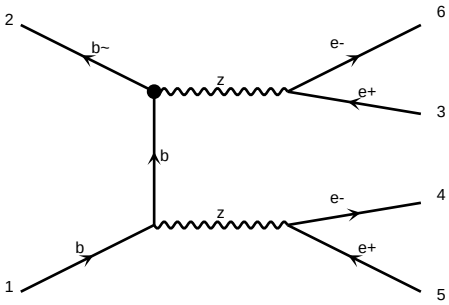

diagram 1703 NP=1, NPcG=0, NPcGtil=0, NPcH=0, NPcHB=0, NPcHDD=0, NPcHW=0, NPcHWB=0, NPcW=0, NPlB=0, NPlHD=0, NPlHe=0, NPlHl=0, NPlHq=0, NPlHu=0, NPlWB=0, NPlWq=0, NPlWu=0, NPqB=0, NPqHD=0, NPqHQ=0, NPqHu=0, NPqW=0, NPuB=0, NPuHD=0, NPuW=0, QCD=0, QED=2, WEIGHTED=4

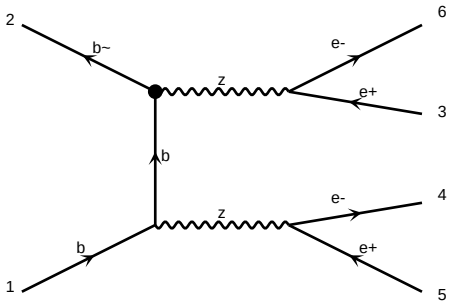

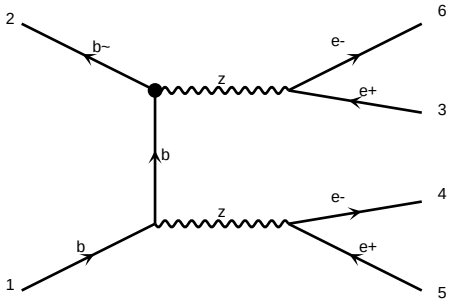

diagram 1705 NP=1, NPcG=0, NPcGtil=0, NPcH=0, NPcHB=0, NPcHDD=0, NPcHW=0, NPcHWB=0, NPcW=0, NPlB=0, NPlHD=0, NPlHe=0, NPlHl=0, NPlHq=0, NPlHu=0, NPlWB=0, NPlWq=0, NPlWu=0, NPqB=0, NPqHD=0, NPqHQ=0, NPqHu=0, NPqW=0, NPuB=0, NPuHD=0, NPuW=0, QCD=0, QED=2, WEIGHTED=4

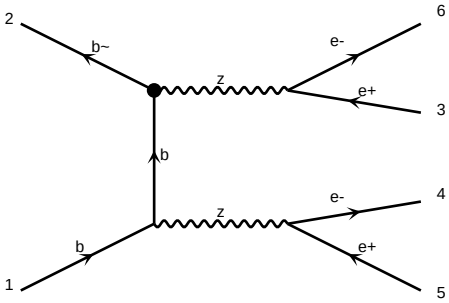

diagram 1706 NP=1, NPcG=0, NPcGtil=0, NPcH=0, NPcHB=0, NPcHDD=0, NPcHW=0, NPcHWB=0, NPcW=0, NPlB=0, NPlHD=0, NPlHe=0, NPlHl=0, NPlHq=0, NPlHu=0, NPlWB=0, NPlWq=0, NPlWu=0, NPqB=0, NPqHD=0, NPqHQ=0, NPqHu=0, NPqW=0, NPuB=0, NPuHD=0, NPuW=0, QCD=0, QED=2, WEIGHTED=4

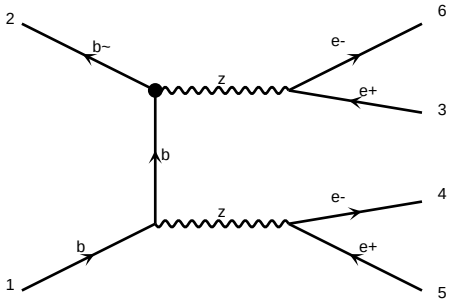

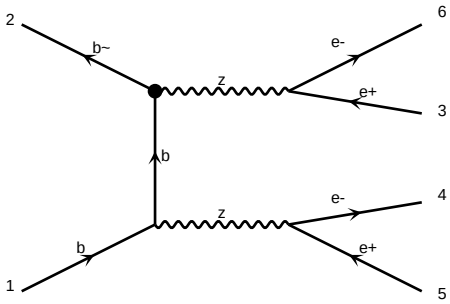

diagram 1708 NP=1, NPcG=0, NPcGtil=0, NPcH=0, NPcHB=0, NPcHDD=0, NPcHW=0, NPcHWB=0, NPcW=0, NPlB=0, NPlHD=0, NPlHe=0, NPlHl=0, NPlHq=0, NPlHu=0, NPlWB=0, NPlWq=0, NPlWu=0, NPqB=0, NPqHD=0, NPqHQ=0, NPqHu=0, NPqW=0, NPuB=0, NPuHD=0, NPuW=0, QCD=0, QED=2, WEIGHTED=4

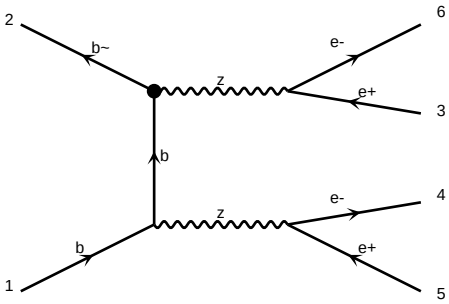

diagram 1709 NP=1, NPcG=0, NPcGtil=0, NPcH=0, NPcHB=0, NPcHDD=0, NPcHW=0, NPcHWB=0, NPcW=0, NPlB=0, NPlHD=0, NPlHe=0, NPlHl=0, NPlHq=0, NPlHu=0, NPlWB=0, NPlWq=0, NPlWu=0, NPqB=0, NPqHD=0, NPqHQ=0, NPqHu=0, NPqW=0, NPuB=0, NPuHD=0, NPuW=0, QCD=0, QED=2, WEIGHTED=4

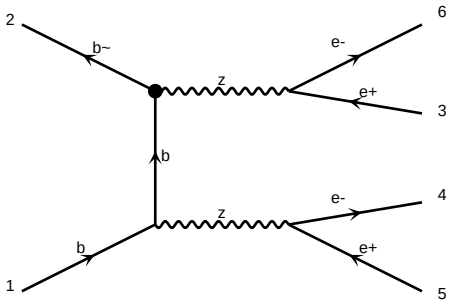

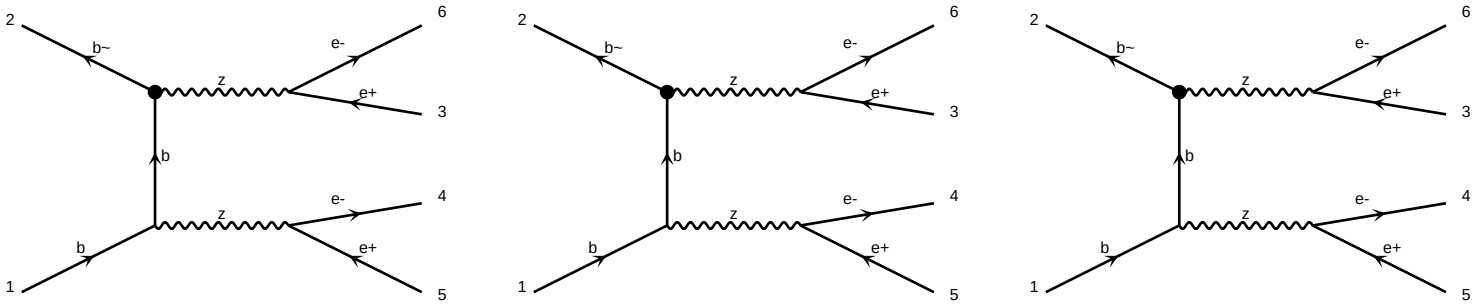

diagram 1711 NP=1, NPcG=0, NPcGtil=0, NPcH=0, NPcHB=0, NPcHDD=0, NPcHW=0, NPcHWB=0, NPcW=0, NPlB=0, NPlH1=0, NPlH2=0, NPlHD=0, NPlHe=0, NPlHl=0, NPlHq1=0, NPlHq3=0, NPlHu=0, NPlW=0, NPlWB=0, NPqG=0, NPqGtil=0, NPqH=0, NPqHB=0, NPqHW=0, NPqW=0, NPuB=0, NPuG=0, NPuH=0, NPuW=0, NPHIG=0, NPHIGtil=0, NPHIW=0, NPHIWtil=0, NPHIB=0, NPHIBtil=0, NPHIWB=0, NPHIWBtil=0, NPHIBB=0, NPHIBBtil=0, NPHIWW=0, NPHIWWtil=0, NPHIGG=0, NPHIGGtil=0, NPHIBW=0, NPHIBWtil=0, NPHIHB=0, NPHIHBtil=0, NPHIHW=0, NPHIHWtil=0, NPHIHD=0, NPHIHDtil=0, NPHIHDD=0, NPHIHDDtil=0, NPHIHe=0, NPHIHetil=0, NPHIHl=0, NPHIHltil=0, NPHIHq1=0, NPHIHq1til=0, NPHIHq3=0, NPHIHq3til=0, NPHIHu=0, NPHIHutil=0, NPHIHW=0, NPHIHWtil=0, NPHIW=0, NPHIWtil=0, NPHIWB=0, NPHIWBtil=0, NPHIB=0, NPHIBtil

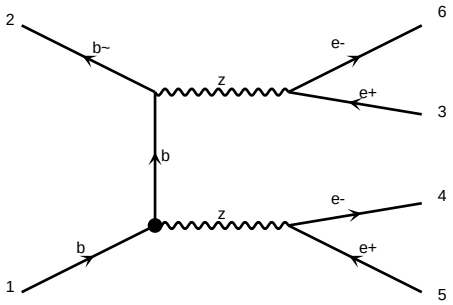

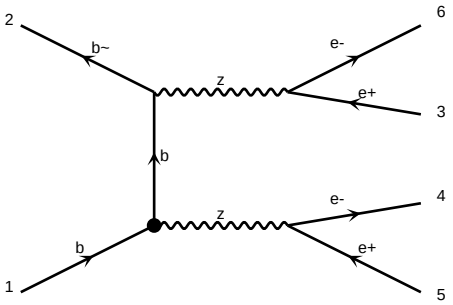

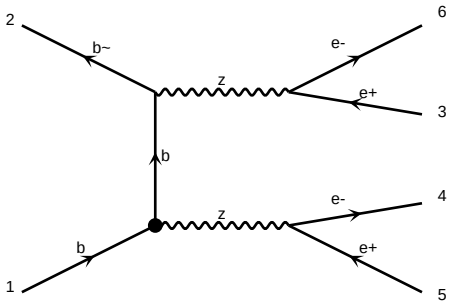

diagram 1726 NP=1, NPcG=0, NPcGtil=0, NPcH=0, NPcHB=0, NPcHDD=1, NPcHW=0, NPcHWB=0, NPcW=0

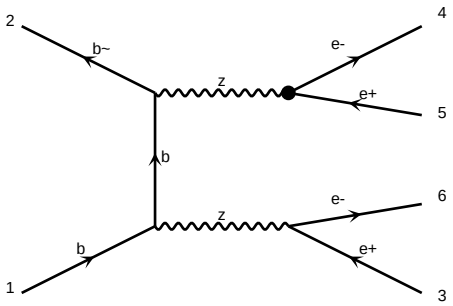

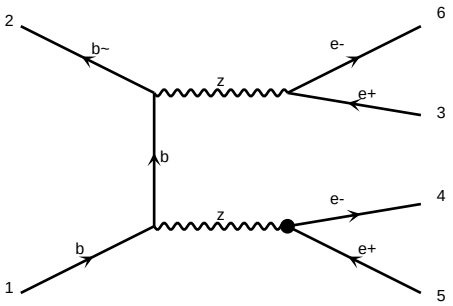

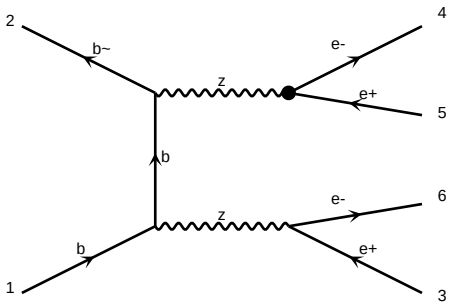

diagram 1729 NP=1, NPcG=0, NPcGtil=0, NPcH=0, NPcHB=0, NPcHDD=1, NPcHW=0, NPcHWB=0, NPcW=0

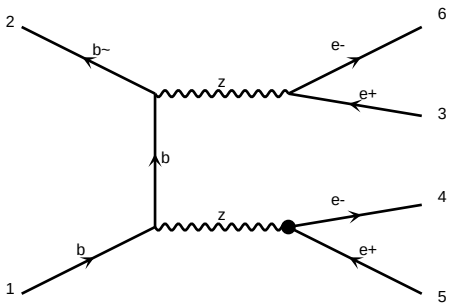

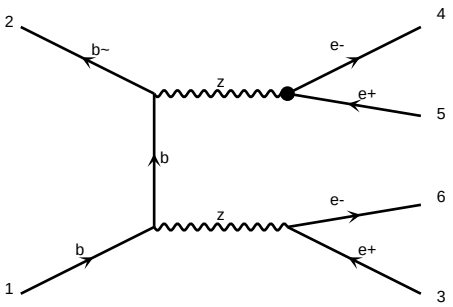

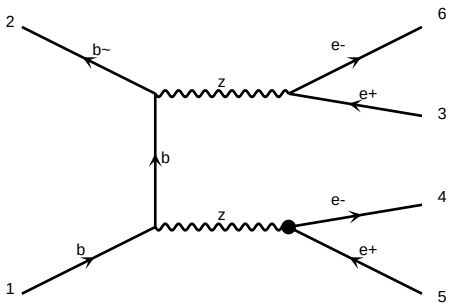

diagram 1732 NP=1, NPcG=0, NPcGtil=0, NPcH=0, NPcHB=0, NPcHDD=1, NPcHW=0, NPcHWB=0, NPcW=0

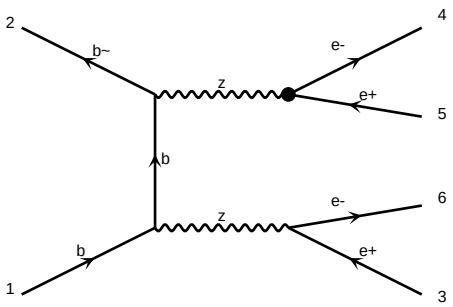

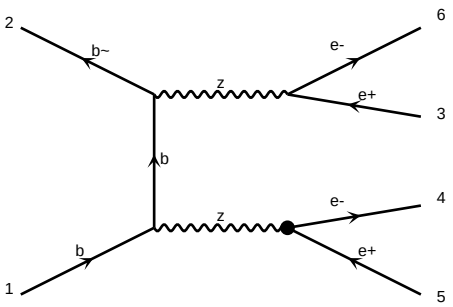

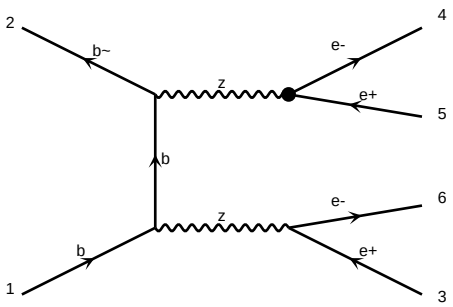

diagram 1735 NP=1, NPcG=0, NPcGtil=0, NPcH=0, NPcHB=0, NPcHDD=1, NPcHW=0, NPcHWB=0, NPcW=0

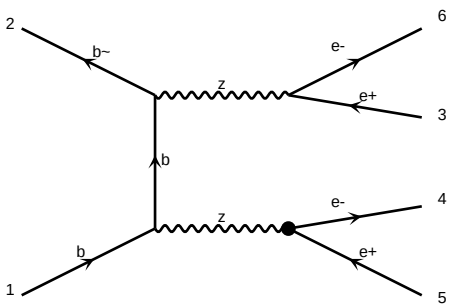

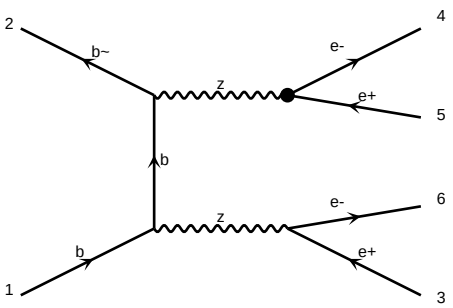

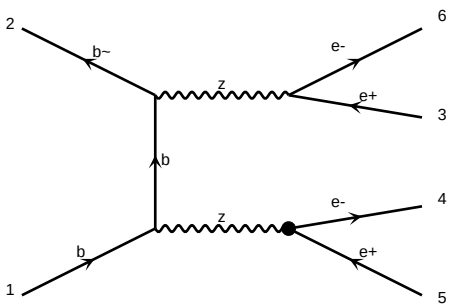

diagram 1738 NP=1, NPcG=0, NPcGtil=0, NPcH=0, NPcHB=0, NPcHDD=1, NPcHW=0, NPcHWB=0, NPcW=0

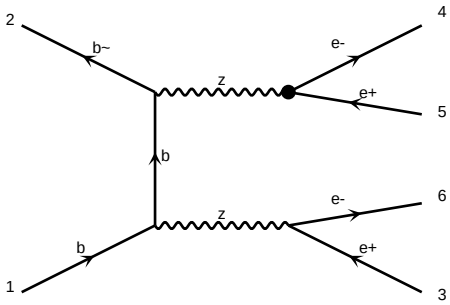

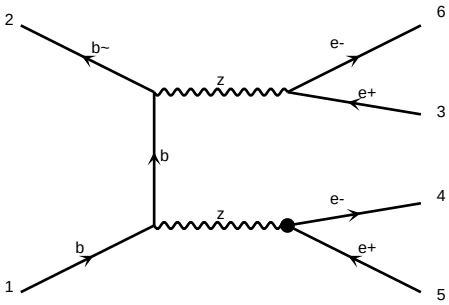

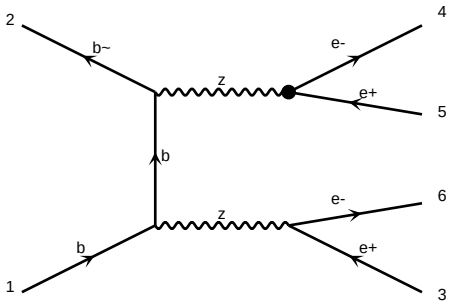

diagram 1741 NP=1, NPcG=0, NPcGtil=0, NPcH=0, NPcHB=0, NPcHDD=0, NPcHW=0, NPcHWB=0, NPcW=0, NPlq1=0, NPlq3=0, NPqe=0, NPqu1=0, NPqu8=0, NPqd1=0, NPqd8=0, NPud1=0, NPud8=0

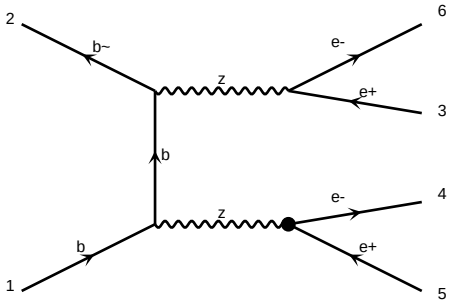

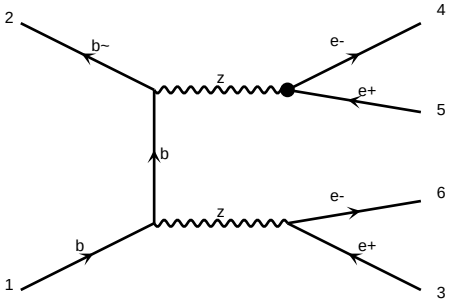

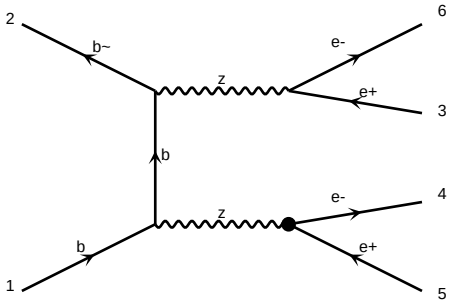

diagram 1744 NP=1, NPcG=0, NPcGtil=0, NPcH=0, NPcHB=0, NPcHDD=0, NPcHW=0, NPcHWB=0, NPcW=0, NPlq1=0, NPlq3=0, NPqe=0, NPqu1=0, NPqu8=0, NPqd1=0, NPqd8=0, NPud1=0, NPud8=0

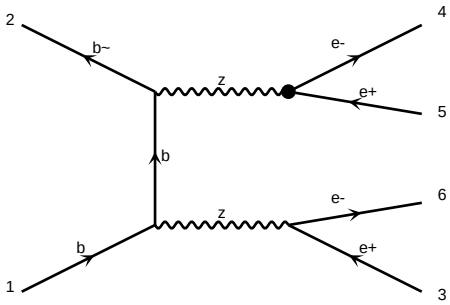

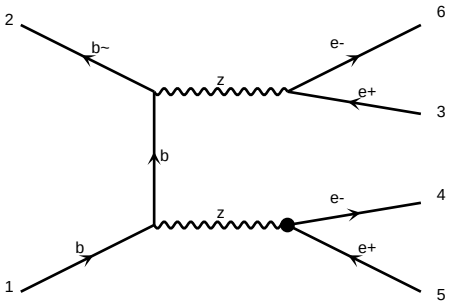

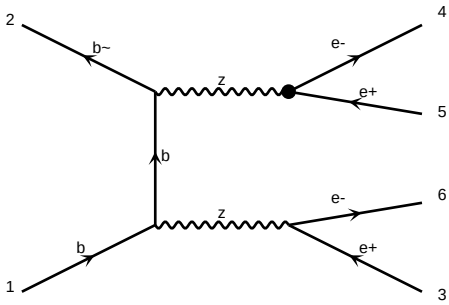

diagram 1747 NP=1, NPcG=0, NPcGtil=0, NPcH=0, NPcHB=0, NPcHDD=0, NPcHW=0, NPcHWB=0, NPcW=0, NPlq1=0, NPlq3=0, NPqe=0, NPqu1=0, NPqu8=0, NPqd1=0, NPqd8=0, NPud1=0, NPud8=0

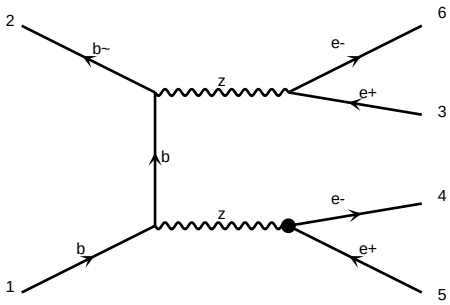

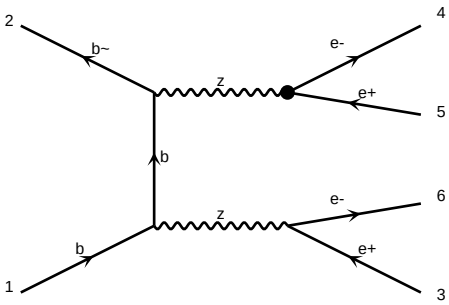

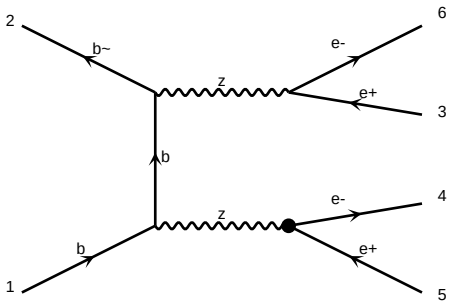

diagram 1750 NP=1, NPcG=0, NPcGtil=0, NPcH=0, NPcHB=0, NPcHDD=0, NPcHW=0, NPcHWB=0, NPcW=0, NPlq1=0, NPlq3=0, NPqe=0, NPqu1=0, NPqu8=0, NPqd1=0, NPqd8=0, NPud1=0, NPud8=0

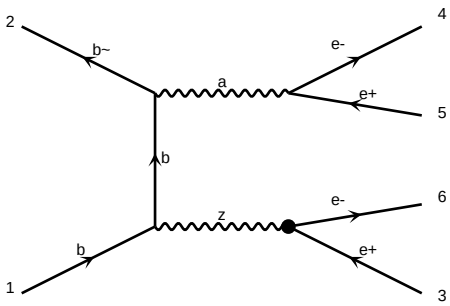

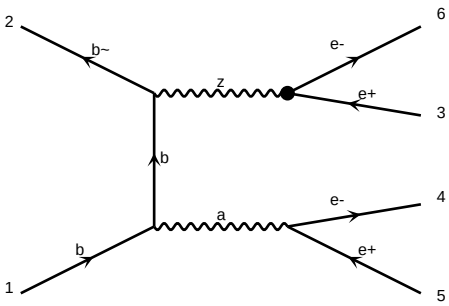

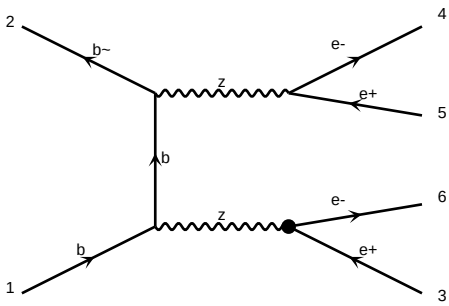

diagram 1753 NP=1, NPcG=0, NPcGtil=0, NPcH=0, NPcHB=0, NPcHDD=0, NPcHW=0, NPcHWB=0, NPcW=0, NPlq1=0, NPlq3=0, NPqe=0, NPqu1=0, NPqu8=0, NPqd1=0, NPqd8=0, NPud1=0, NPud8=0

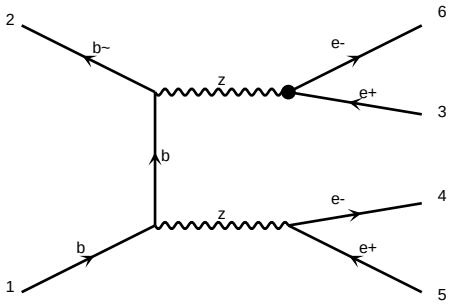

diagram 1756 NP=1, NPcG=0, NPcGtil=0, NPcH=0, NPcHB=0, NPcHDD=0, NPcHW=0, NPcHWB=0, NPcW=0, NPlq1=0, NPlq3=0, NPqe=0, NPqu1=0, NPqu8=0, NPqd1=0, NPqd8=0, NPud1=0, NPud8=0

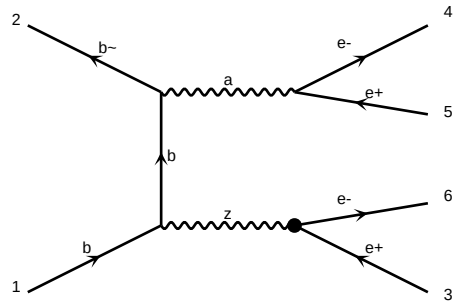

diagram 1757 NP=1, NPcG=0, NPcGtil=0, NPcH=0, NPcHB=0, NPcHDD=0, NPcHW=0, NPcHWB=0, NPcW=0, NPlq1=0, NPlq3=0, NPqe=0, NPqu1=0, NPqu8=0, NPqd1=0, NPqd8=0, NPud1=0, NPud8=0

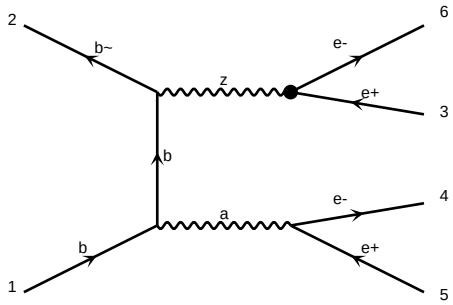

diagram 1758 NP=1, NPcG=0, NPcGtil=0, NPcH=0, NPcHB=0, NPcHDD=0, NPcHW=0, NPcHWB=0, NPcW=0, NPlq1=0, NPlq3=0, NPqe=0, NPqu1=0, NPqu8=0, NPqd1=0, NPqd8=0, NPud1=0, NPud8=0

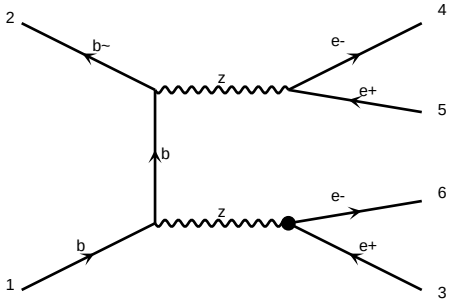

diagram 1759 NP=1, NPcG=0, NPcGtil=0, NPcH=0, NPcHB=0, NPcHDD=0, NPcHW=0, NPcHWB=0, NPcW=0, NPlq1=0, NPlq3=0, NPqe=0, NPqu1=0, NPqu8=0, NPqd1=0, NPqd8=0, NPud1=0, NPud8=0

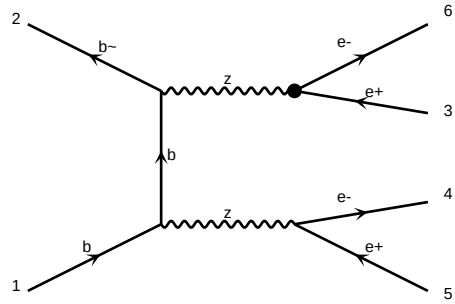

diagram 1760 NP=1, NPcG=0, NPcGtil=0, NPcH=0, NPcHB=0, NPcHDD=0, NPcHW=0, NPcHWB=0, NPcW=0, NPlq1=0, NPlq3=0, NPqe=0, NPqu1=0, NPqu8=0, NPqd1=0, NPqd8=0, NPud1=0, NPud8=0

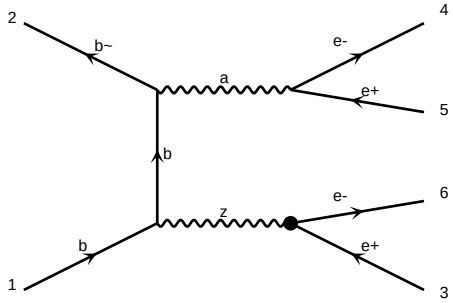

diagram 1761 NP=1, NPcG=0, NPcGtil=0, NPcH=0, NPcHB=0, NPcHDD=0, NPcHW=0, NPcHWB=0, NPcW=0, NPlq1=0, NPlq3=0, NPqe=0, NPqu1=0, NPqu8=0, NPqd1=0, NPqd8=0, NPud1=0, NPud8=0

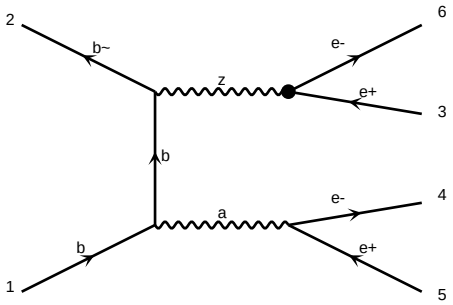

diagram 1762 NP=1, NPcG=0, NPcGtil=0, NPcH=0, NPcHB=0, NPcHDD=0, NPcHW=0, NPcHWB=0, NPcW=0, NPlq1=0, NPlq3=0, NPqe=0, NPqu1=0, NPqu8=0, NPqd1=0, NPqd8=0, NPud1=0, NPud8=0

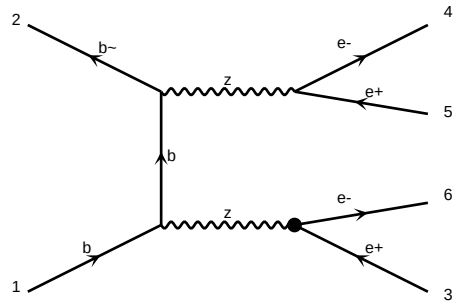

diagram 1763 NP=1, NPcG=0, NPcGtil=0, NPcH=0, NPcHB=0, NPcHDD=0, NPcHW=0, NPcHWB=0, NPcW=0, NPlq1=0, NPlq3=0, NPqe=0, NPqu1=0, NPqu8=0, NPqd1=0, NPqd8=0, NPud1=0, NPud8=0

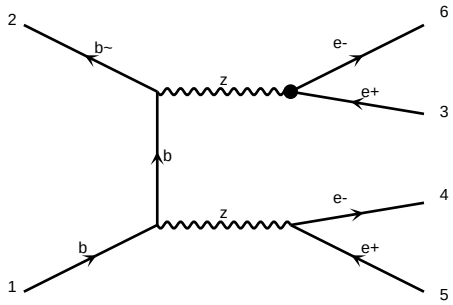

diagram 1764 NP=1, NPcG=0, NPcGtil=0, NPcH=0, NPcHB=0, NPcHDD=0, NPcHW=0, NPcHWB=0, NPcW=0, NPlq1=0, NPlq3=0, NPqe=0, NPqu1=0, NPqu8=0, NPqd1=0, NPqd8=0, NPud1=0, NPud8=0

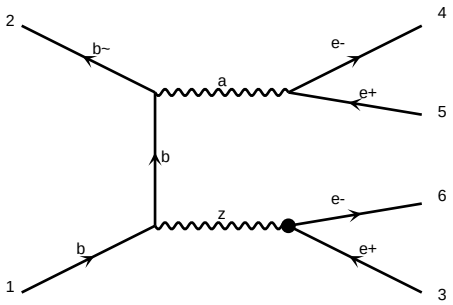

diagram 1765 NP=1, NPcG=0, NPcGtil=0, NPcH=0, NPcHB=0, NPcHDD=0, NPcHW=0, NPcHWB=0, NPcW=0, NPlq1=0, NPlq3=0, NPqe=0, NPqu1=0, NPqu8=0, NPqd1=0, NPqd8=0, NPud1=0, NPud8=0

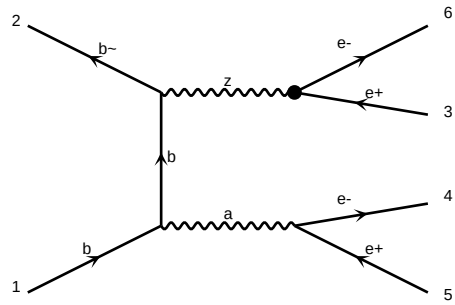

diagram 1766 NP=1, NPcG=0, NPcGtil=0, NPcH=0, NPcHB=0, NPcHDD=0, NPcHW=0, NPcHWB=0, NPcW=0, NPlq1=0, NPlq3=0, NPqe=0, NPqu1=0, NPqu8=0, NPqd1=0, NPqd8=0, NPud1=0, NPud8=0

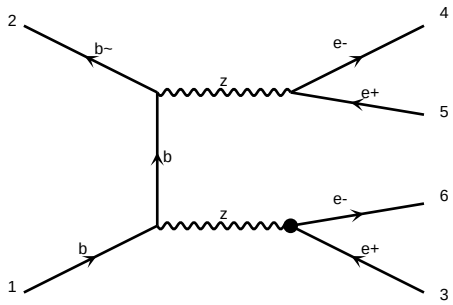

diagram 1767 NP=1, NPcG=0, NPcGtil=0, NPcH=0, NPcHB=0, NPcHDD=0, NPcHW=0, NPcHWB=0, NPcW=0, NPlq1=0, NPlq3=0, NPqe=0, NPqu1=0, NPqu8=0, NPqd1=0, NPqd8=0, NPud1=0, NPud8=0

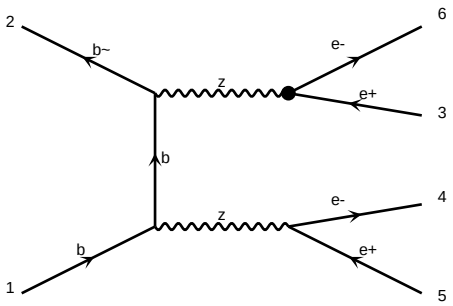

diagram 1768 NP=1, NPcG=0, NPcGtil=0, NPcH=0, NPcHB=0, NPcHDD=0, NPcHW=0, NPcHWB=0, NPcW=0, NPlq1=0, NPlq3=0, NPqe=0, NPqu1=0, NPqu8=0, NPqd1=0, NPqd8=0, NPud1=0, NPud8=0

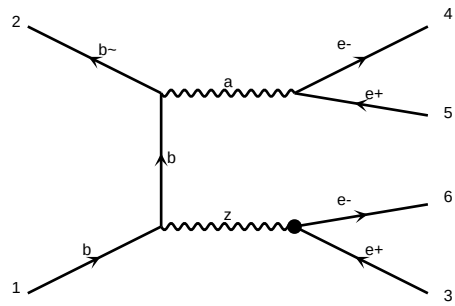

diagram 1769 NP=1, NPcG=0, NPcGtil=0, NPcH=0, NPcHB=0, NPcHDD=0, NPcHW=0, NPcHWB=0, NPcW=0, NPlq1=0, NPlq3=0, NPqe=0, NPqu1=0, NPqu8=0, NPqd1=0, NPqd8=0, NPud1=0, NPud8=0

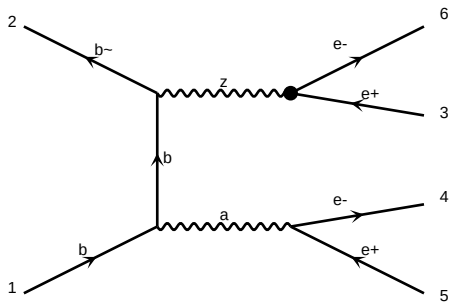

diagram 1770 NP=1, NPcG=0, NPcGtil=0, NPcH=0, NPcHB=0, NPcHDD=0, NPcHW=0, NPcHWB=0, NPcW=0, NPlq1=0, NPlq3=0, NPqe=0, NPqu1=0, NPqu8=0, NPqd1=0, NPqd8=0, NPud1=0, NPud8=0

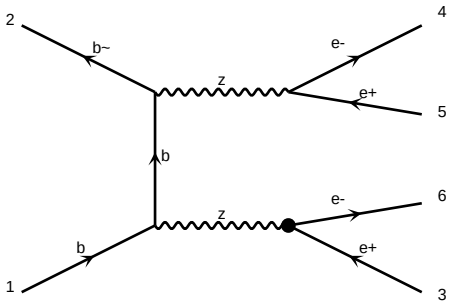

diagram 1771 NP=1, NPcG=0, NPcGtil=0, NPcH=0, NPcHB=0, NPcHDD=0, NPcHW=0, NPcHWB=0, NPcW=0, NPlB=0, NPlH=0, NPlHD=0, NPlHe=0, NPlHl=0, NPlHq=0, NPlHu=0, NPlWB=0, NPlWl=0, NPlWq=0, NPlWu=0, NPlee=0, NPlle=0, NPlqd=0, NPlqe=0, NPlqq=0, NPlqu=0, NPlud=0, NPluu=0, NPqHd=0, NPqHu=0, NPqWd=0, NPqWu=0, NPuHd=0, NPuHu=0, NPuWd=0, NPuWu=0, NPHDD=0, NPHW=0, NPHWB=0, NPW=0, NPeH=0, NPe

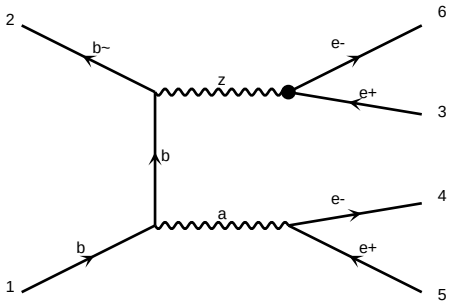

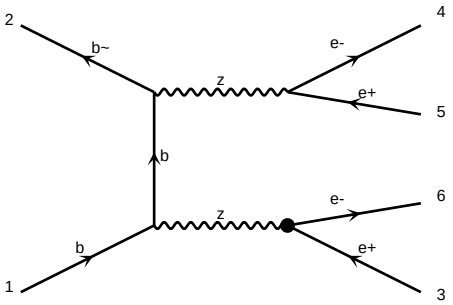

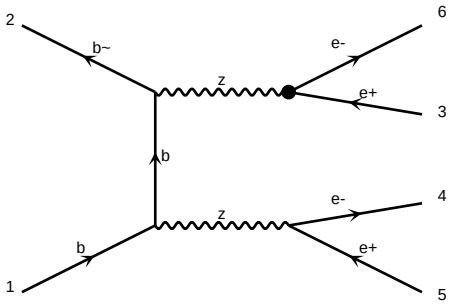

diagram 1786 NP=1, NPcG=0, NPcGtil=0, NPcH=0, NPcHB=0, NPcHDD=0, NPcHW=0, NPcHWB=0, NPcW=0

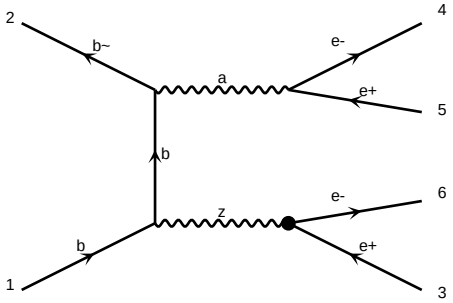

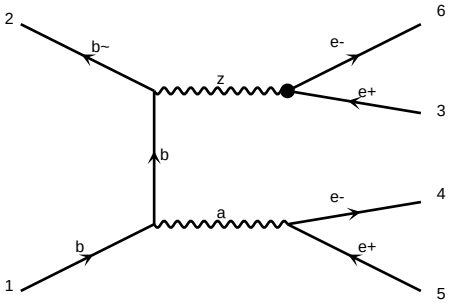

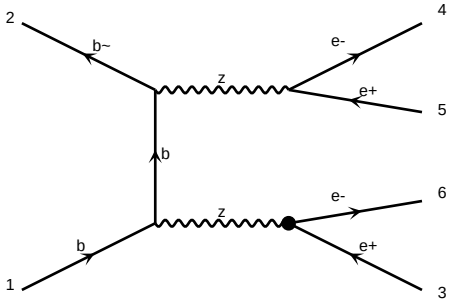

diagram 1789 NP=1, NPcG=0, NPcGtil=0, NPcH=0, NPcHB=0, NPcHDD=0, NPcHW=0, NPcHWB=0, NPcW=0

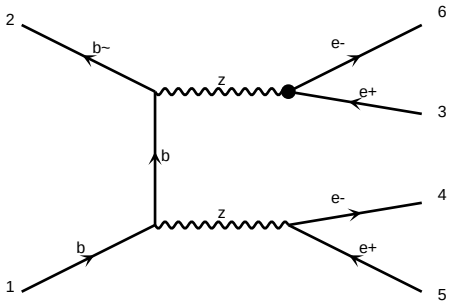

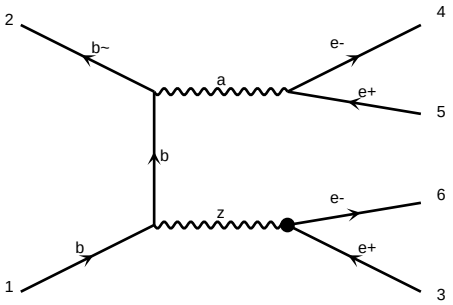

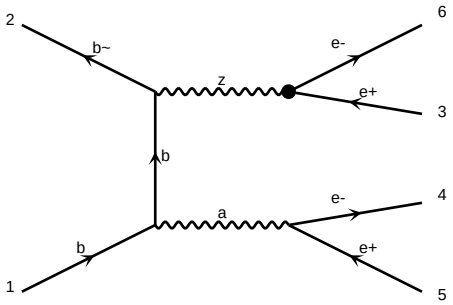

diagram 1792 NP=1, NPcG=0, NPcGtil=0, NPcH=0, NPcHB=0, NPcHDD=0, NPcHW=0, NPcHWB=0, NPcW=0

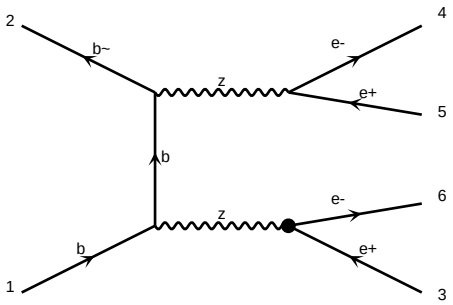

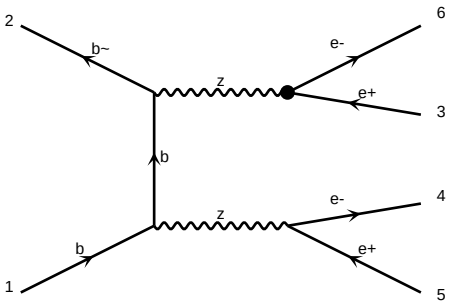

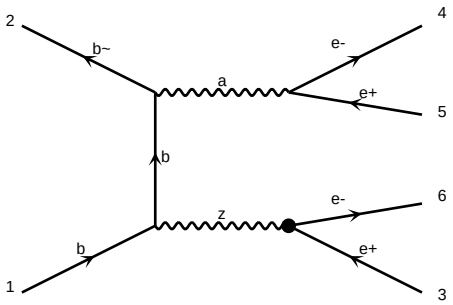

diagram 1795 NP=1, NPcG=0, NPcGtil=0, NPcH=0, NPcHB=0, NPcHDD=0, NPcHW=0, NPcHWB=0, NPcW=0

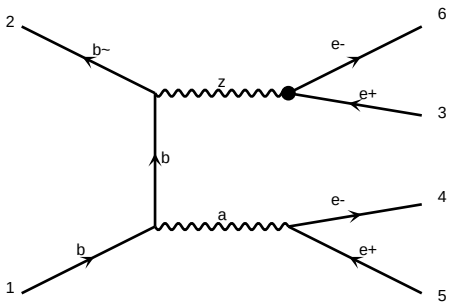

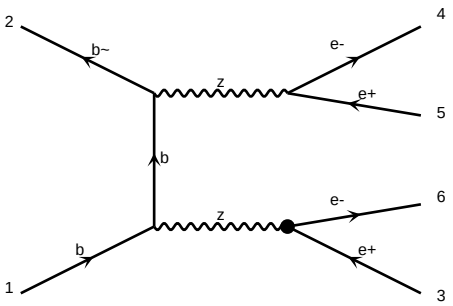

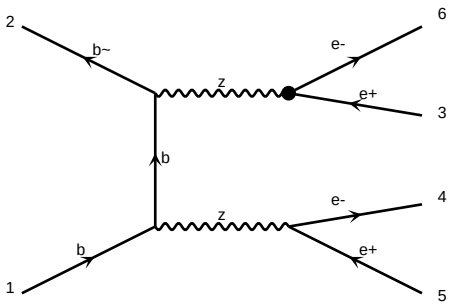

diagram 1798 NP=1, NPcG=0, NPcGtil=0, NPcH=0, NPcHB=0, NPcHDD=0, NPcHW=0, NPcHWB=0, NPcW=0

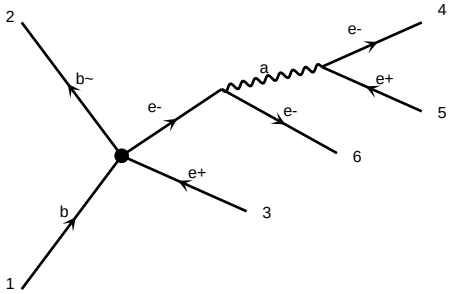

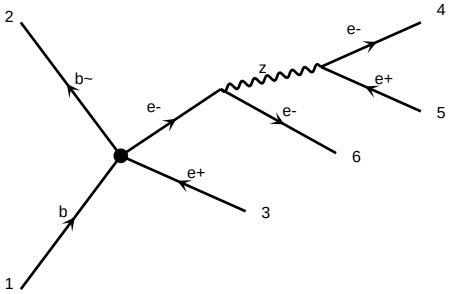

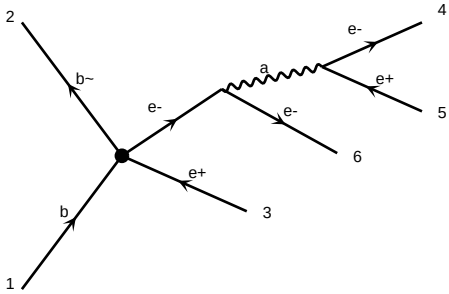

diagram 1801 NP=1, NPcG=0, NPcGtil=0, NPcH=0, NPcHB=0, NPcHDD=0, NPcHW=0, NPcHWB=0, NPcW=0, NPeHB=0, NPeW=0, NPlB=0, NPlH=0, NPlHB=0, NPlHW=0, NPlW=0, NPuB=0, NPuG=0, NPuH=0, NPuW=0, NPdB=0, NPdG=0, NPdH=0, NPdW=0, NPqq1=0, NPqq3=0, NPqu1=0, NPqu8=0, NPqd1=0, NPqd8=0, NPlq1=0, NPlq3=0, NPeu=0, NPed=0, NPle=0, NPlu=0, NPld=0, NPqe=0

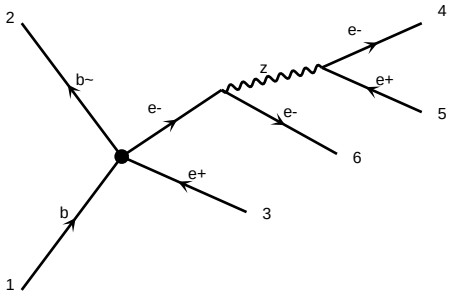

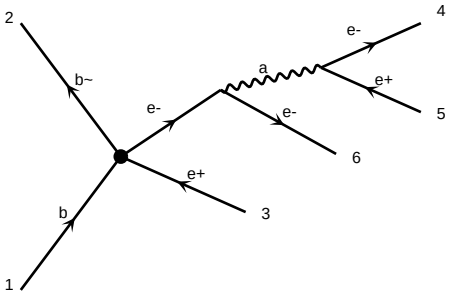

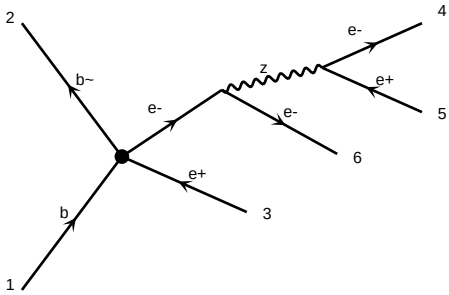

diagram 1804 NP=1, NPcG=0, NPcGtil=0, NPcH=0, NPcHB=0, NPcHDD=0, NPcHW=0, NPcHWB=0, NPcW=0, NPeHB=0, NPeW=0, NPlB=0, NPlH=0, NPlHB=0, NPlHW=0, NPlW=0, NPuB=0, NPuG=0, NPuH=0, NPuW=0, NPdB=0, NPdG=0, NPdH=0, NPdW=0, NPqq1=0, NPqq3=0, NPqu1=0, NPqu8=0, NPqd1=0, NPqd8=0, NPlq1=0, NPlq3=0, NPeu=0, NPed=0, NPle=0, NPlu=0, NPld=0, NPqe=0

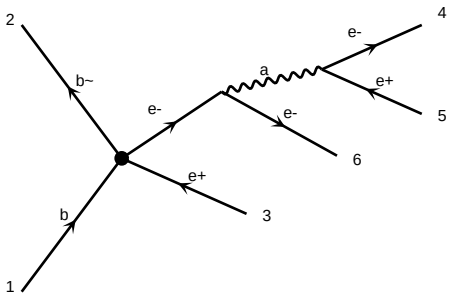

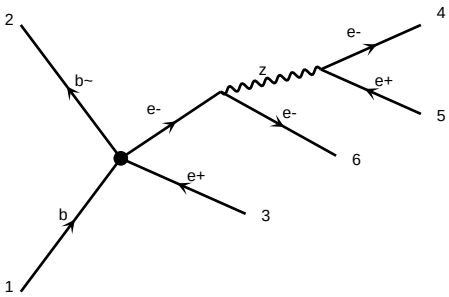

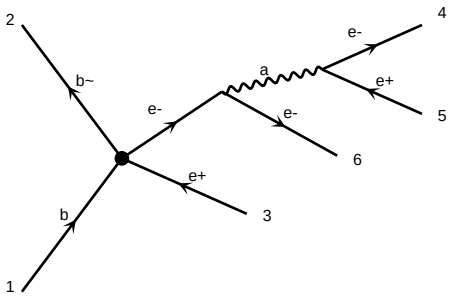

diagram 1807 NP=1, NPcG=0, NPcGtil=0, NPcH=0, NPcHB=0, NPcHDD=0, NPcHW=0, NPcHWB=0, NPcW=0, NPeHB=0, NPeW=0, NPlB=0, NPlH=0, NPlHB=0, NPlHW=0, NPlW=0, NPuB=0, NPuG=0, NPuH=0, NPuW=0, NPdB=0, NPdG=0, NPdH=0, NPdW=0, NPqq1=0, NPqq3=0, NPqu1=0, NPqu8=0, NPqd1=0, NPqd8=0, NPlq1=0, NPlq3=0, NPeu=0, NPed=0, NPle=0, NPlu=0, NPld=0, NPqe=0

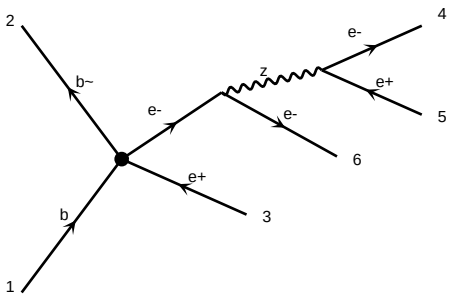

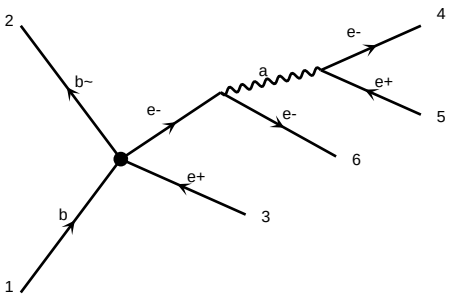

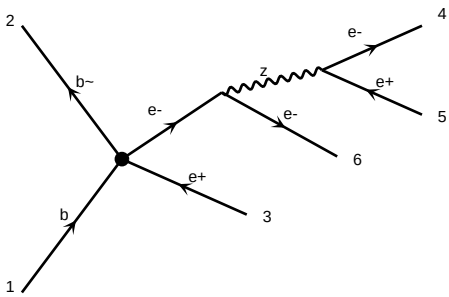

diagram 1810 NP=1, NPcG=0, NPcGtil=0, NPcH=0, NPcHB=0, NPcHDD=0, NPcHW=0, NPcHWB=0, NPcW=0, NPeHB=0, NPeW=0, NPlB=0, NPlH=0, NPlHB=0, NPlHW=0, NPlW=0, NPuB=0, NPuG=0, NPuH=0, NPuW=0, NPdB=0, NPdG=0, NPdH=0, NPdW=0, NPqq1=0, NPqq3=0, NPqu1=0, NPqu8=0, NPqd1=0, NPqd8=0, NPlq1=0, NPlq3=0, NPeu=0, NPed=0, NPle=0, NPlu=0, NPld=0, NPqe=0

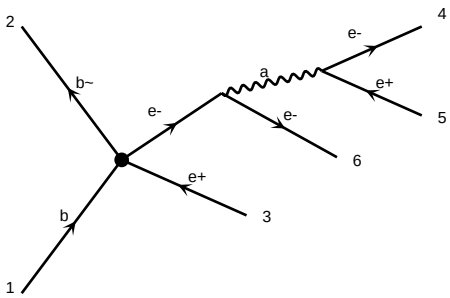

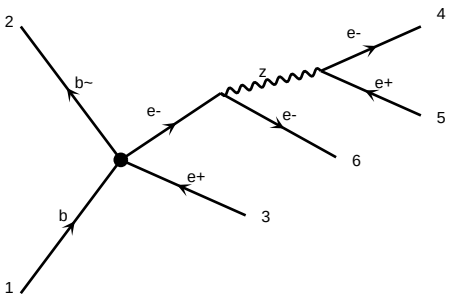

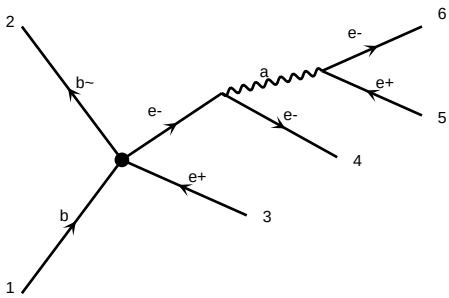

diagram 1813 NP=1, NPcG=0, NPcGtil=0, NPcH=0, NPcHB=0, NPcHDD=0, NPcHW=0, NPcHWB=0, NPcW=0, NPeHB=0, NPeW=0, NPlB=0, NPlH=0, NPlHB=0, NPlHW=0, NPlW=0, NPuB=0, NPuG=0, NPuH=0, NPuW=0, NPdB=0, NPdG=0, NPdH=0, NPdW=0, NPqq1=0, NPqq3=0, NPqu1=0, NPqu8=0, NPqd1=0, NPqd8=0, NPlq1=0, NPlq3=0, NPeu=0, NPed=0, NPle=0, NPlu=0, NPld=0, NPqe=0

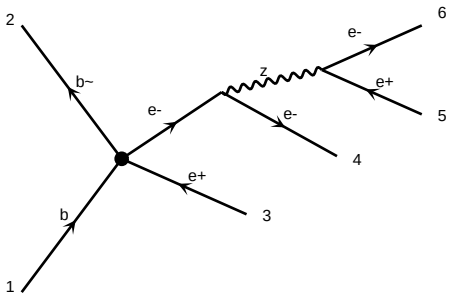

diagram 1816 NP=1, NPcG=0, NPcGtil=0, NPcH=0, NPcHB=0, NPcHDD=0, NPcHW=0, NPcHWB=0, NPcW=0, NPlB=0, NPlH=0, NPlHD=0, NPlHe=0, NPlHl=0, NPlW=0, NPlWB=0, NPlWe=0, NPlWl=0, NPlWtil=0, NPlWtilB=0, NPlWtilWB=0, NPlWtilWe=0, NPlWtilWl=0, NPlWtilWtil=0, NPlWtilWtilB=0, NPlWtilWtilWB=0, NPlWtilWtilWe=0, NPlWtilWtilWl=0, NPlWtilWtilWtil=0, NPlWtilWtilWtilB=0, NPlWtilWtilWtilWB=0, NPlWtilWtilWtilWe=0, NPlWtilWtilWtilWl=0, NPlWtilWtilWtilWtil=0, NPlWtilWtilWtilWtilB=0, NPlWtilWtilWtilWtilWB=0, NPlWtilWtilWtilWtilWe=0, NPlWtilWtilWtilWtilWl=0, NPlWtilWtilWtilWtilWtil=0, NPlWtilWtilWtilWtilWtilB=0, NPlWtilWtilWtilWtilWtilWB=0, NPlWtilWtilWtilWtilWtilWe=0, NPlWtilWtilWtilWtilWtilWl=0, NPlWtilWtilWtilWtilWtilWtil=0, NPlWtilWtilWtilWtilWtilWtilB=0, NPlWtilWtilWtilWtilWtilWtilWB=0, NPlWtilWtilWtilWtilWtilWtilWe=0, NPlWtilWtilWtilWtilWtilWtilWl=0, NPlWtilWtilWtilWtilWtilWtilWtil=0, NPlWtilWtilWtilWtilWtilWtilWtilB=0, NPlWtilWtilWtilWtilWtilWtilWtilWB=0, NPlWtilWtilWtilWtilWtilWtilWtilWe=0, NPlWtilWtilWtilWtilWtilWtilWtilWl=0, NPlWtilWtilWtilWtilWtilWtilWtilWtil=0, NPlWtilWtilWtilWtilWtilWtilWtilWtilB=0, NPlWtilWtilWtilWtilWtilWtilWtilWtilWB=0, NPlWtilWtilWtilWtilWtilWtilWtilWtilWe=0, NPlWtilWtilWtilWtilWtilWtilWtilWtilWl=0, NPlWtilWtilWtilWtilWtilWtilWtilWtilWtil=0, NPlWtilWtilWtilWtilWtilWtilWtilWtilWtilB=0, NPlWtilWtilWtilWtilWtilWtilWtilWtilWtilWB=0, NPlWtilWtilWtilWtilWtilWtilWtilWtilWtilWe=0, NPlWtilWtilWtilWtilWtilWtilWtilWtilWtilWl=0, NPlWtilWtilWtilWtilWtilWtilWtilWtilWtilWtil=0, NPlWtilWtilWtilWtilWtilWtilWtilWtilWtilWtilB=0, NPlWtilWtilWtilWtilWtilWtilWtilWtilWtilWtilWB=0, NPlWtilWtilWtilWtilWtilWtilWtilWtilWtilWtilWe=0, NPlWtilWtilWtilWtilWtilWtilWtilWtilWtilWtilWl=0, NPlWtilWtilWtilWtilWtilWtilWtilWtilWtilWtilWtil=0, NPlWtilWtilWtilWtilWtilWtilWtilWtilWtilWtilWtilB=0, NPlWtilWtilWtilWtilWtilWtilWtilWtilWtilWtilWtilWB=0, NPlWtilWtilWtilWtilWtilWtilWtilWtilWtilWtilWtilWe=0, NPlWtilWtilWtilWtilWtilWtilWtilWtilWtilWtilWtilWl=0, NPlWtilWtilWtilWtilWtilWtilWtilWtilWtilWtilWtilWtil=0, NPlWtilWtilWtilWtilWtilWtilWtilWtilWtilWtilWtilWtilB=0, NPlWtilWtilWtilWtilWtilWtilWtilWtilWtilWtilWtilWtilWB=0, NPlWtilWtilWtilWtilWtilWtilWtilWtilWtilWtilWtilWtilWe=0, NPlWtilWtilWtilWtilWtilWtilWtilWtilWtilWtilWtilWtilWl=0, NPlWtilWtilWtilWtilWtilWtilWtilWtilWtilWtilWtilWtilWtil=0, NPlWtilWtilWtilWtilWtilWtilWtilWtilWtilWtilWtilWtilWtilB=0, NPlWtilWtilWtilWtilWtilWtilWtilWtilWtilWtilWtilWtilWtilWB=0, NPlWtilWtilWtilWtilWtilWtilWtilWtilWtilWtilWtilWtilWtilWe=0, NPlWtilWtilWtilWtilWtilWtilWtilWtilWtilWtilWtilWtilWtilWl=0, NPlWtilWtilWtilWtilWtilWtilWtilWtilWtilWtilWtilWtilWtilWtil=0, NPlWtilWtilWtilWtilWtilWtilWtilWtilWtilWtilWtilWtilWtilWtilB=0, NPlWtilWtilWtilWtilWtilWtilWtilWtilWtilWtilWtilWtilWtilWtilWB=0, NPlWtilWtilWtilWtilWtilWtilWtilWtilWtilWtilWtilWtilWtilWtilWe=0, NPlWtilWtilWtilWtilWtilWtilWtilWtilWtilWtilWtilWtilWtilWtilWl=0, NPlWtilWtilWtilWtilWtilWtilWtilWtilWtilWtilWtilWtilWtilWtilWtil=0, NPlWtilWtilWtilWtilWtilWtilWtilWtilWtilWtilWtilWtilWtilWtilWtilB=0, NPlWtilWtilWtilWtilWtilWtilWtilWtilWtilWtilWtilWtilWtilWtilWtilWB=0, NPlWtilWtilWtilWtilWtilWtilWtilWtilWtilWtilWtilWtilWtilWtilWtilWe=0, NPlWtilWtilWtilWtilWtilWtilWtilWtilWtilWtilWtilWtilWtilWtilWtilWl=0, NPlWtilWtilWtilWtilWtilWtilWtilWtilWtilWtilWtilWtilWtilWtilWtilWtil=0, NPlWtilWtilWtilWtilWtilWtilWtilWtilWtilWtilWtilWtilWtilWtilWtilWtilB=0, NPlWtilWtilWtilWtilWtilWtilWtilWtilWtilWtilWtilWtilWtilWtilWtilWtilWB=0, NPlWtilWtilWtilWtilWtilWtilWtilWtilWtilWtilWtilWtilWtilWtilWtilWtilWe=0, NPlWtilWtilWtilWtilWtilWtilWtilWtilWtilWtilWtilWtilWtilWtilWtilWtilWl=0, NPlWtilWtilWtilWtilWtilWtilWtilWtilWtilWtilWtilWtilWtilWtilWtilWtilWtil=0, NPlWtilWtilWtilWtilWtilWtilWtilWtilWtilWtilWtilWtilWtilWtilWtilWtilWtilB=0, NPlWtilWtilWtilWtilWtilWtilWtilWtilWtilWtilWtilWtilWtilWtilWtilWtilWtilWB=0, NPlWtilWtilWtilWtilWtilWtilWtilWtilWtilWtilWtilWtilWtilWtilWtilWtilWtilWe=0, NPlWtilWtilWtilWtilWtilWtilWtilWtilWtilWtilWtilWtilWtilWtilWtilWtilWtilWl=0, NPlWtilWtilWtilWtilWtilWtilWtilWtilWtilWtilWtilWtilWtilWtilWtilWtilWtilWtil=0, NPlWtilWtilWtilWtilWtilWtilWtilWtilWtilWtilWtilWtilWtilWtilWtilWtilWtilWtilB=0, NPlWtilWtilWtilWtilWtilWtilWtilWtilWtilWtilWtilWtilWtilWtilWtilWtilWtilWtilWB=0, NPlWtilWtilWtilWtilWtilWtilWtilWtilWtilWtilWtilWtilWtilWtilWtilWtilWtilWtilWe=0, NPlWtilWtilWtilWtilWtilWtilWtilWtilWtilWtilWtilWtilWtilWtilWtilWtilWtilWtilWl=0, NPlWtilWtilWtilWtilWtilWtilWtilWtilWtilWtilWtilWtilWtilWtilWtilWtilWtilWtilWtil=0, NPlWtilWtilWtilWtilWtilWtilWtilWtilWtilWtilWtilWtilWtilWtilWtilWtilWtilWtilWtilB=0, NPlWtilWtilWtilWtilWtilWtilWtilWtilWtilWtilWtilWtilWtilWtilWtilWtilWtilWtilWtilWB=0, NPlWtilWtilWtilWtilWtilWtilWtilWtilWtilWtilWtilWtilWtilWtilWtilWtilWtilWtilWtilWe=0, NPlWtilWtilWtilWtilWtilWtilWtilWtilWtilWtilWtilWtilWtilWtilWtilWtilWtilWtilWtilWl=0, NPlWtilWtilWtilWtilWtilWtilWtilWtilWtilWtilWtilWtilWtilWtilWtilWtilWtilWtilWtilWtil=0, NPlWtilWtilWtilWtilWtilWtilWtilWtilWtilWtilWtilWtilWtilWtilWtilWtilWtilWtilWtilWtilB=0, NPlWtilWtilWtilWtilWtilWtilWtilWtilWtilWtilWtilWtilWtilWtilWtilWtilWtilWtilWtilWtilWB=0, NPlWtilWtilWtilWtilWtilWtilWtilWtilWtilWtilWtilWtilWtilWtilWtilWtilWtilWtilWtilWtilWe=0, NPlWtilWtilWtilWtilWtilWtilWtilWtilWtilWtilWtilWtilWtilWtilWtilWtilWtilWtilWtilWtilWl=0, NPlWtilWtilWtilWtilWtilWtilWtilWtilWtilWtilWtilWtilWtilWtilWtilWtilWtilWtilWtilWtilWtil=0, NPlWtilWtilWtilWtilWtilWtilWtilWtilWtilWtilWtilWtilWtilWtilWtilWtilWtilWtilWtilWtilWtilB=0, NPlWtilWtilWtilWtilWtilWtilWtilWtilWtilWtilWtilWtilWtilWtilWtilWtilWtilWtilWtilWtilWtilWB=0, NPlWtilWtilWtilWtilWtilWtilWtilWtilWtilWtilWtilWtilWtilWtilWtilWtilWtilWtilWtilWtilWtilWe=0, NPlWtilWtilWtilWtilWtilWtilWtilWtilWtilWtilWtilWtilWtilWtilWtilWtilWtilWtilWtilWtilWtilWl=0, NPlWtilWtilWtilWtilWtilWtilWtilWtilWtilWtilWtilWtilWtilWtilWtilWtilWtilWtilWtilWtilWtilWtil=0, NPlWtilWtilWtilWtilWtilWtilWtilWtilWtilWtilWtilWtilWtilWtilWtilWtilWtilWtilWtilWtilWtilWtilB=0, NPlWtilWtilWtilWtilWtilWtilWtilWtilWtilWtilWtilWtilWtilWtilWtilWtilWtilWtilWtilWtilWtilWtilWB=0, NPlWtilWtilWtilWtilWtilWtilWtilWtilWtilWtilWtilWtilWtilWtilWtilWtilWtilWtilWtilWtilWtilWtilWe=0, NPlWtilWtilWtilWtilWtilWtilWtilWtilWtilWtilWtilWtilWtilWtilWtilWtilWtilWtilWtilWtilWtilWtilWl=0, NPlWtilWtilWtilWtilWtilWtilWtilWtilWtilWtilWtilWtilWtilWtilWtilWtilWtilWtilWtilWtilWtilWtilWtil=0, NPlWtilWtilWtilWtilWtilWtilWtilWtilWtilWtilWtilWtilWtilWtilWtilWtilWtilWtilWtilWtilWtilWtilWtilB=0, NPlWtilWtilWtilWtilWtilWtilWtilWtilWtilWtilWtilWtilWtilWtilWtilWtilWtilWtilWtilWtilWtilWtilWtilWB=0, NPlWtilWtilWtilWtilWtilWtilWtilWtilWtilWtilWtilWtilWtilWtilWtilWtilWtilWtilWtilWtilWtilWtilWtilWe=0, NPlWtilWtilWtilWtilWtilWtilWtilWtilWtilWtilWtilWtilWtilWtilWtilWtilWtilWtilWtilWtilWtilWtilWtilWl=0, NPlWtilWtilWtilWtilWtilWtilWtilWtilWtilWtilWtilWtilWtilWtilWtilWtilWtilWtilWtilWtilWtilWtilWtilWtil=0, NPlWtilWtilWtilWtilWtilWtilWtilWtilWtilWtilWtilWtilWtilWtilWtilWtilWtilWtilWtilWtilWtilWtilWtilWtilB=0, NPlWtilWtilWtilWtilWtilWtilWtilWtilWtilWtilWtilWtilWtilWtilWtilWtilWtilWtilWtilWtilWtilWtilWtilWtilWB=0, NPlWtilWtilWtilWtilWtilWtilWtilWtilWtilWtilWtilWtilWtilWtilWtilWtilWtilWtilWtilWtilWtilWtilWtilWtilWe=0, NPlWtilWtilWtilWtilWtilWtilWtilWtilWtilWtilWtilWtilWtilWtilWtilWtilWtilWtilWtilWtilWtilWtilWtilWtilWl=0, NPlWtilWtilWtilWtilWtilWtilWtilWtilWtilWtilWtilWtilWtilWtilWtilWtilWtilWtilWtilWtilWtilWtilWtilWtilWtil=0, NPlWtilWtilWtilWtilWtilWtilWtilWtilWtilWtilWtilWtilWtilWtilWtilWtilWtilWtilWtilWtilWtilWtilWtilWtilWtilB=0, NPlWtilWtilWtilWtilWtilWtilWtilWtilWtilWtilWtilWtilWtilWtilWtilWtilWtilWtilWtilWtilWtilWtilWtilWtilWtilWB=0, NPlWtilWtilWtilWtilWtilWtilWtilWtilWtilWtilWtilWtilWtilWtilWtilWtilWtilWtilWtilWtilWtilWtilWtilWtilWtilWe=0, NPlWtilWtilWtilWtilWtilWtilWtilWtilWtilWtilWtilWtilWtilWtilWtilWtilWtilWtilWtilWtilWtilWtilWtilWtilWtilWl=0, NPlWtilWtilWtilWtilWtilWtilWtilWtilWtilWtilWtilWtilWtilWtilWtilWtilWtilWtilWtilWtilWtilWtilWtilWtilWtilWtil=0, NPlWtilWtilWtilWtilWtilWtilWtilWtilWtilWtilWtilWtilWtilWtilWtilWtilWtilWtilWtilWtilWtilWtilWtilWtilWtilWtilB=0, NPlWtilWtilWtilWtilWtilWtilWtilWtilWtilWtilWtilWtilWtilWtilWtilWtilWtilWtilWtilWtilWtilWtilWtilWtilWtilWtilWB=0, NPlWtilWtilWtilWtilWtilWtilWtilWtilWtilWtilWtilWtilWtilWtilWtilWtilWtilWtilWtilWtilWtilWtilWtilWtilWtilWtilWe=0, NPlWtilWtilWtilWtilWtilWtilWtilWtilWtilWtilWtilWtilWtilWtilWtilWtilWtilWtilWtilWtilWtilWtilWtilWtilWtilWtilWl=0, NPlWtilWtilWtilWtilWtilWtilWtilWtilWtilWtilWtilWtilWtilWtilWtilWtilWtilWtilWtilWtilWtilWtilWtilWtilWtilWtilWtil=0, NPlWtilWtilWtilWtilWtilWtilWtilWtilWtilWtilWtilWtilWtilWtilWtilWtilWtilWtilWtilWtilWtilWtilWtilWtilWtilWtilWtilB=0, NPlWtilWtilWtilWtilWtilWtilWtilWtilWtilWtilWtilWtilWtilWtilWtilWtilWtilWtilWtilWtilWtilWtilWtilWtilWtilWtilWtilWB=0, NPlWtilWtilWtilWtilWtilWtilWtilWtilWtilWtilWtilWtilWtilWtilWtilWtilWtilWtilWtilWtilWtilWtilWtilWtilWtilWtilWtilWe=0, NPlWtilWtilWtilWtilWtilWtilWtilWtilWtilWtilWtilWtilWtilWtilWtilWtilWtilWtilWtilWtilWtilWtilWtilWtilWtilWtilWtilWl=0, NPlWtilWtilWtilWtilWtilWtilWtilWtilWtilWtilWtilWtilWtilWtilWtilWtilWtilWtilWtilWtilWtilWtilWtilWtilWtilWtilWtilWtil=0, NPlWtilWtilWtilWtilWtilWtilWtilWtilWtilWtilWtilWtilWtilWtilWtilWtilWtilWtilWtilWtilWtilWtilWtilWtilWtilWtilWtilWtilB=0, NPlWtilWtilWtilWtilWtilWtilWtilWtilWtilWtilWtilWtilWtilWtilWtilWtilWtilWtilWtilWtilWtilWtilWtilWtilWtilWtilWtilWtilWB=0, NPlWtilWtilWtilWtilWtilWtilWtilWtilWtilWtilWtilWtilWtilWtilWtilWtilWtilWtilWtilWtilWtilWtilWtilWtilWtilWtilWtilWtilWe=0, NPlWtilWtilWtilWtilWtilWtilWtilWtilWtilWtilWtilWtilWtilWtilWtilWtilWtilWtilWtilWtilWtilWtilWtilWtilWtilWtilWtilWtilWl=0, NPlWtilWtilWtilWtilWtilWtilWtilWtilWtilWtilWtilWtilWtilWtilWtilWtilWtilWtilWtilWtilWtilWtilWtilWtilWtilWtilWtilWtilWtil=0, NPlWtilWtilWtilWtilWtilWtilWtilWtilWtilWtilWtilWtilWtilWtilWtilWtilWtilWtilWtilWtilWtilWtilWtilWtilWtilWtilWtilWtilWtilB=0, NPlWtilWtilWtilWtilWtilWtilWtilWtilWtilWtilWtilWtilWtilWtilWtilWtilWtilWtilWtilWtilWtilWtilWtilWtilWtilWtilWtilWtilWtilWB=0, NPlWtilWtilWtilWtilWtilWtilWtilWtilWtilWtilWtilWtilWtilWtilWtilWtilWtilWtilWtilWtilWtilWtilWtilWtilWtilWtilWtilWtilWtilWe=0, NPlWtilWtilWtilWtilWtilWtilWtilWtilWtilWtilWtilWtilWtilWtilWtilWtilWtilWtilWtilWtilWtilWtilWtilWtilWtilWtilWtilWtilWtilWl=0, NPlWtilWtilWtilWtilWtilWtilWtilWtilWtilWtilWtilWtilWtilWtilWtilWtilWtilWtilWtilWtilWtilWtilWtilWtilWtilWtilWtilWtilWtilWtil=0, NPlWtilWtilWtilWtilWtilWtilWtilWtilWtilWtilWtilWtilWtilWtilWtilWtilWtilWtilWtilWtilWtilWtilWtilWtilWtilWtilWtilWtilWtilWtilB=0, NPlWtilWtilWtilWtilWtilWtilWtilWtilWtilWtilWtilWtilWtilWtilWtilWtilWtilWtilWtilWtilWtilWtilWtilWtilWtilWtilWtilWtilWtilWtilWB=0, NPlWtilWtilWtilWtilWtilWtilWtilWtilWtilWtilWtilWtilWtilWtilWtilWtilWtilWtilWtilWtilWtilWtilWtilWtilWtilWtilWtilWtilWtilWtilWe=0, NPlWtilWtilWtilWtilWtilWtilWtilWtilWtilWtilWtilWtilWtilWtilWtilWtilWtilWtilWtilWtilWtilWtilWtilWtilWtilWtilWtilWtilWtilWtilWl=0, NPlWtilWtilWtilWtilWtilWtilWtilWtilWtilWtilWtilWtilWtilWtilWtilWtilWtilWtilWtilWtilWtilWtilWtilWtilWtilWtilWtilWtilWtilWtilWtil=0, NPlWtilWtilWtilWtilWtilWtilWtilWtilWtilWtilWtilWtilWtilWtilWtilWtilWtilWtilWtilWtilWtilWtilWtilWtilWtilWtilWtilWtilWtilWtilWtilB=0, NPlWtilWtilWtilWtilWtilWtilWtilWtilWtilWtilWtilWtilWtilWtilWtilWtilWtilWtilWtilWtilWtilWtilWtilWtilWtilWtilWtilWtilWtilWtilWtilWB=0, NPlWtilWtilWtilWtilWtilWtilWtilWtilWtilWtilWtilWtilWtilWtilWtilWtilWtilWtilWtilWtilWtilWtilWtilWtilWtilWtilWtilWtilWtilWtilWtilWe=0, NPlWtilWtilWtilWtilWtilWtilWtilWtilWtilWtilWtilWtilWtilWtilWtilWtilWtilWtilWtilWtilWtilWtilWtilWtilWtilWtilWtilWtilWtilWtilWtilWl=0, NPlWtilWtilWtilWtilWtilWtilWtilWtilWtilWtilWtilWtilWtilWtilWtilWtilWtilWtilWtilWtilWtilWtilWtilWtilWtilWtilWtilWtilWtilWtilWtilWtil=0, NPlWtilWtilWtilWtilWtilWtilWtilWtilWtilWtilWtilWtilWtilWtilWtilWtilWtilWtilWtilWtilWtilWtilWtilWtilWtilWtilWtilWtilWtilWtilWtilWtilB=0, NPlWtilWtilWtilWtilWtilWtilWtilWtilWtilWtilWtilWtilWtilWtilWtilWtilWtilWtilWtilWtilWtilWtilWtilWtilWtilWtilWtilWtilWtilWtilWtilWtilWB=0, NPlWtilWtilWtilWtilWtilWtilWtilWtilWtilWtilWtilWtilWtilWtilWtilWtilWtilWtilWtilWtilWtilWtilWtilWtilWtilWtilWtilWtilWtilWtilWtilWtilWe=0, NPlWtilWtilWtilWtilWtilWtilWtilWtilWtilWtilWtilWtilWtilWtilWtilWtilWtilWtilWtilWtilWtilWtilWtilWtilWtilWtilWtilWtilWtilWtilWtilWtilWl=0, NPlWtilWtilWtilWtilWtilWtilWtilWtilWtilWtilWtilWtilWtilWtilWtilWtilWtilWtilWtilWtilWtilWtilWtilWtilWtilWtilWtilWtilWtilWtilWtilWtilWtil=0, NPlWtilWtilWtilWtilWtilWtilWtilWtilWtilWtilWtilWtilWtilWtilWtilWtilWtilWtilWtilWtilWtilWtilWtilWtilWtilWtilWtilWtilWtilWtilWtilWtilWtilB=0, NPlWtilWtilWtilWtilWtilWtilWtilWtilWtilWtilWtilWtilWtilWtilWtilWtilWtilWtilWtilWtilWtilWtilWtilWtilWtilWtilWtilWtilWtilWtilWtilWtilWtilWB=0, NPlWtilWtilWtilWtilWtilWtilWtilWtilWtilWtilWtilWtilWtilWtilWtilWtilWtilWtilWtilWtilWtilWtilWtilWtilWtilWtilWtilWtilWtilWtilWtilWtilWtilWe=0, NPlWtilWtilWtilWtilWtilWtilWtilWtilWtilWtilWtilWtilWtilWtilWtilWtilWtilWtilWtilWtilWtilWtilWtilWtilWtilWtilWtilWtilWtilWtilWtilWtilWtilWl=0, NPlWtilWtilWtilWtilWtilWtilWtilWtilWtilWtilWtilWtilWtilWtilWtilWtilWtilWtilWtilWtilWtilWtilWtilWtilWtilWtilWtilWtilWtilWtilWtilWtilWtilWtil=0, NPlWtilWtilWtilWtilWtilWtilWtilWtilWtilWtilWtilWtilWtilWtilWtilWtilWtilWtilWtilWtilWtilWtilWtilWtilWtilWtilWtilWtilWtilWtilWtilWtilWtilWtilB=0, NPlWtilWtilWtilWtilWtilWtilWtilWtilWtilWtilWtilWtilWtilWtilWtilWtilWtilWtilWtilWtilWtilWtilWtilWtilWtilWtilWtilWtilWtilWtilWtilWtilWtilWtilWB=0, NPlWtilWtilWtilWtilWtilWtilWtilWtilWtilWtilWtilWtilWtilWtilWtilWtilWtilWtilWtilWtilWtilWtilWtilWtilWtilWtilWtilWtilWtilWtilWtilWtilWtilWtilWe=0, NPlWtilWtilWtilWtilWtilWtilWtilWtilWtilWtilWtilWtilWtilWtilWtilWtilWtilWtilWtilWtilWtilWtilWtilWtilWtilWtilWtilWtilWtilWtilWtilWtilWtilWtilWl=0, NPlWtilWtilWtilWtilWtilWtilWtilWtilWtilWtilWtilWtilWtilWtilWtilWtilWtilWtilWtilWtilWtilWtilWtilWtilWtilWtilWtilWtilWtilWtilWtilWtilWtilWtilWtil=0, NPlWtilWtilWtilWtilWtilWtilWtilWtilWtilWtilWtilWtilWtilWtilWtilWtilWtilWtilWtilWtilWtilWtilWtilWtilWtilWtilWtilWtilWtilWtilWtilWtilWtilWtilWtilB=0, NPlWtilWtilWtilWtilWtilWtilWtilWtilWtilWtilWtilWtilWtilWtilWtilWtilWtilWtilWtilWtilWtilWtilWtilWtilWtilWtilWtilWtilWtilWtilWtilWtilWtilWtilWtilWB=0, NPlWtilWtilWtilWtilWtilWtilWtilWtilWtilWtilWtilWtilWtilWtilWtilWtilWtilWtilWtilWtilWtilWtilWtilWtilWtilWtilWtilWtilWtilWtilWtilWtilWtilWtilWtilWe=0, NPlWtilWtilWtilWtilWtilWtilWtilWtilWtilWtilWtilWtilWtilWtilWtilWtilWtilWtilWtilWtilWtilWtilWtilWtilWtilWtilWtilWtilWtilWtilWtilWtilWtilWtilWtilWl=0, NPlWtilWtilWtilWtilWtilWtilWtilWtilWtilWtilWtilWtilWtilWtilWtilWtilWtilWtilWtilWtilWtilWtilWtilWtilWtilWtilWtilWtilWtilWtilWtilWtilWtilWtilWtilWtil=0, NPlWtilWtilWtilWtilWtilWtilWtilWtilWtilWtilWtilWtilWtilWtilWtilWtilWtilWtilWtilWtilWtilWtilWtilWtilWtilWtilWtilWtilWtilWtilWtilWtilWtilWtilWtilB=0, NPlWtilWtilWtilWtilWtilWtilWtilWtilWtilWtilWtilWtilWtilWtilWtilWtilWtilWtilWtilWtilWtilWtilWtilWtilWtilWtilWtilWtilWtilWtilWtilWtilWtilWtilWtilWB=0, NPlWtilWtilWtilWtilWtilWtilWtilWtilWtilWtilWtilWtilWtilWtilWtilWtilWtilWtilWtilWtilWtilWtilWtilWtilWtilWtilWtilWtilWtilWtilWtilWtilWtilWtilWtilWe=0, NPlWtilWtilWtilWtilWtilWtilWtilWtilWtilWtilWtilWtilWtilWtilWtilWtilWtilWtilWtilWtilWtilWtilWtilWtilWtilWtilWtilWtilWtilWtilWtilWtilWtilWtilWtilWl=0, NPlWtilWtilWtilWtilWtilWtilWtilWtilWtilWtilWtilWtilWtilWtilWtilWtilWtilWtilWtilWtilWtilWtilWtilWtilWtilWtilWtilWtilWtilWtilWtilWtilWtilWtilWtil=0, NPlWtilWtilWtilWtilWtilWtilWtilWtilWtilWtilWtilWtilWtilWtilWtilWtilWtilWtilWtilWtilWtilWtilWtilWtilWtilWtilWtilWtilWtilWtilWtilWtilWtilWtilWtilB=0, NPlWtilWtilWtilWtilWtilWtilWtilWtilWtilWtilWtilWtilWtilWtilWtilWtilWtilWtilWtilWtilWtilWtilWtilWtilWtilWtilWtilWtilWtilWtilWtilWtilWtilWtilWtilWB=0, NPlWtilWtilWtilWtilWtilWtilWtilWtilWtilWtilWtilWtilWtilWtilWtilWtilWtilWtilWtilWtilWtilWtilWtilWtilWtilWtilWtilWtilWtilWtilWtilWtilWtilWtilWtilWe=0, NPlWtilWtilWtilWtilWtilWtilWtilWtilWtilWtilWtilWtilWtilWtilWtilWtilWtilWtilWtilWtilWtilWtilWtilWtilWtilWtilWtilWtilWtilWtilWtilWtilWtilWtilWtilWl=0, NPlWtilWtilWtilWtilWtilWtilWtilWtilWtilWtilWtilWtilWtilWtilWtilWtilWtilWtilWtilWtilWtilWtilWtilWtilWtilWtilWtilWtilWtilWtilWtilWtilWtilWtilWtil=0, NPlWtilWtilWtilWtilWtilWtilWtilWtilWtilWtilWtilWtilWtilWtilWtilWtilWtilWtilWtilWtilWtilWtilWtilWtilWtilWtilWtilWtilWtilWtilWtilWtilWtilWtilB=0, NPlWtilWtilWtilWtilWtilWtilWtilWtilWtilWtilWtilWtilWtilWtilWtilWtilWtilWtilWtilWtilWtilWtilWtilWtilWtilWtilWtilWtilWtilWtilWtilWtilWtilWtilWB=0, NPlWtilWtilWtilWtilWtilWtilWtilWtilWtilWtilWtilWtilWtilWtilWtilWtilWtilWtilWtilWtilWtilWtilWtilWtilWtilWtilWtilWtilWtilWtilWtilWtilWtilWtilWe=0, NPl

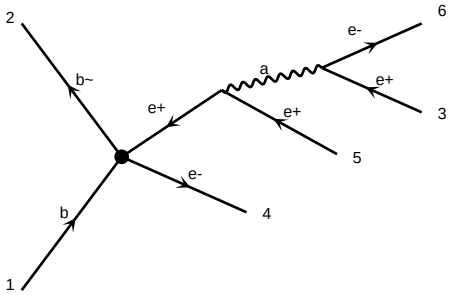

diagram 1831 NP=1, NPcG=0, NPcGtil=0, NPcH=0, NPcHB=0, NPcHDD=0, NPcHW=0, NPcHWB=0, NPcW=0, NPcbH=0, NPcbW=0, NPcdH=0, NPcdW=0, NPceH=0, NPceW=0, NPcfB=0, NPcfH=0, NPcfW=0, NPcuH=0, NPcuW=0, NPlebQ=0, NPledq=0, NPlequ1=0, NPlequ3=0, NPlfB=0, NPlfH=0, NPlfW=0, NPlnlB=0, NPlnlH=0, NPlnlW=0, NPqeB=0, NPqeH=0, NPqeW=0, NPquB=0, NPquH=0, NPquW=0, NPqdB=0, NPqdH=0, NPqdW=0, NPqfB=0, NPqfH=0, NPqfW=0, NPqqB=0, NPqqH=0, NPqqW=0, NPqtB=0, NPqtH=0, NPqtW=0, NPtB=0, NPtH=0, NPtW=0, NPtbB=0, NPtbH=0, NPtbW=0, NPtdB=0, NPtdH=0, NPtdW=0, NPteB=0, NPteH=0, NPteW=0, NPtfB=0, NPtfH=0, NPtfW=0, NPtuB=0, NPtuH=0, NPtuW=0, NPtlB=0, NPtlH=0, NPtlW=0, NPtqB=0, NPtqH=0, NPtqW=0, NPttB=0, NPttH=0, NPttW=0, NPuB=0, NPuH=0, NPuW=0, NPud1B=0, NPud1H=0, NPud1W=0, NPud8B=0, NPud8H=0, NPud8W=0, NPqd1B=0, NPqd1H=0, NPqd1W=0, NPqd8B=0, NPqd8H=0, NPqd8W=0, NPqu1B=0, NPqu1H=0, NPqu1W=0, NPqu8B=0, NPqu8H=0, NPqu8W=0, NPld1B=0, NPld1H=0, NPld1W=0, NPle1B=0, NPle1H=0, NPle1W=0, NPlu1B=0, NPlu1H=0, NPlu1W=0, NPqe1B=0, NPqe1H=0, NPqe1W=0, NPlq1B=0, NPlq1H=0, NPlq1W=0, NPlq3B=0, NPlq3H=0, NPlq3W=0, NPed1B=0, NPed1H=0, NPed1W=0, NPeu1B=0, NPeu1H=0, NPeu1W=0, NPqq1B=0, NPqq1H=0, NPqq1W=0, NPqq3B=0, NPqq3H=0, NPqq3W

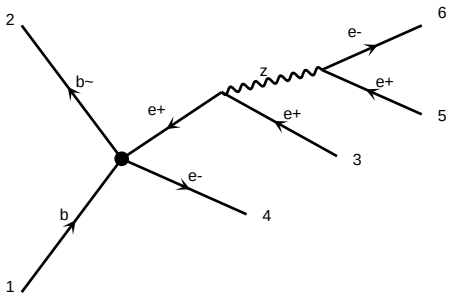

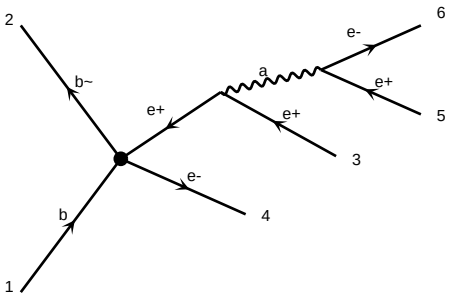

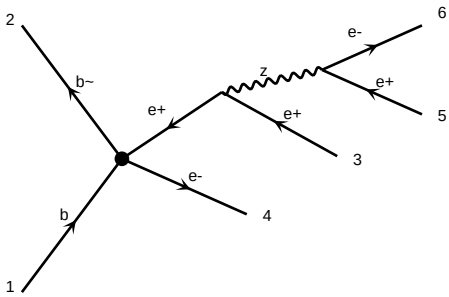

diagram 1846 NP=1, NPcG=0, NPcGtil=0, NPcH=0, NPcHB=0, NPcHDD=0, NPcHW=0, NPcHWB=0, NPcW=0, NPlB=0, NPlHD=0, NPlHe=0, NPlHl=0, NPlHq=0, NPlHu=0, NPlWB=0, NPlWq=0, NPlWu=0, NPqB=0, NPqHD=0, NPqHQ=0, NPqHd=0, NPqHu=0, NPqW=0, NPuB=0, NPuHD=0, NPuW=0, QED=4, QNP=1, WEIGHTED=6

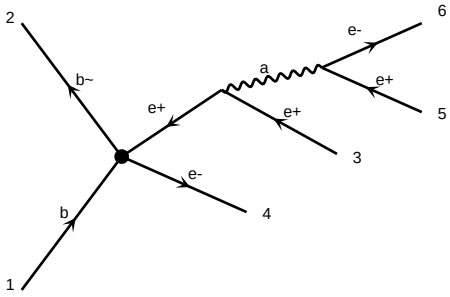

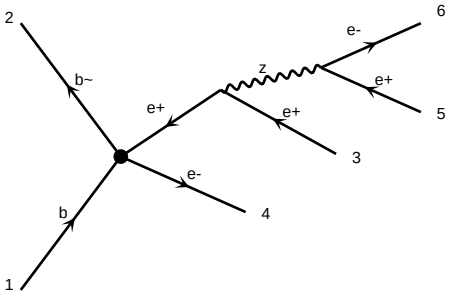

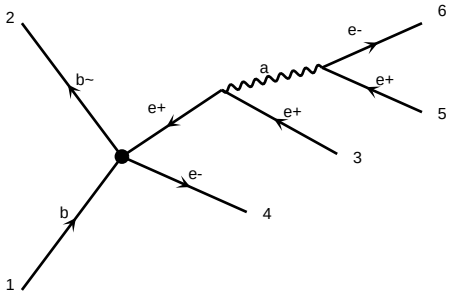

diagram 1849 NP=1, NPcG=0, NPcGtil=0, NPcH=0, NPcHB=0, NPcHDD=0, NPcHW=0, NPcHWB=0, NPcW=0, NPlB=0, NPlHD=0, NPlHe=0, NPlHl=0, NPlHq=0, NPlHu=0, NPlWB=0, NPlWq=0, NPlWu=0, NPqB=0, NPqHD=0, NPqHQ=0, NPqHd=0, NPqHu=0, NPqW=0, NPuB=0, NPuHD=0, NPuW=0, QED=4, QNP=1, WEIGHTED=6

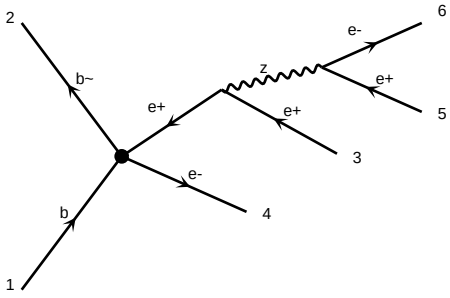

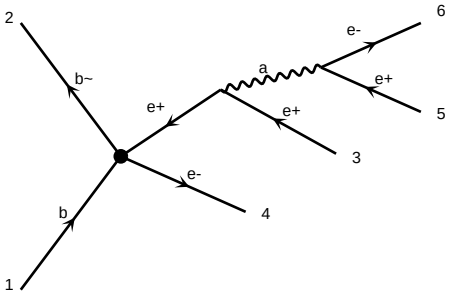

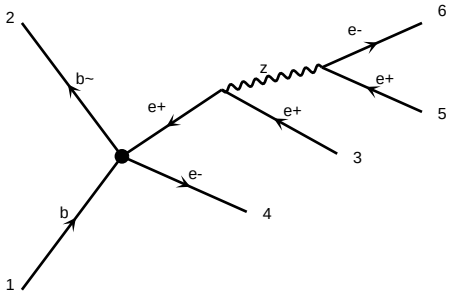

diagram 1852 NP=1, NPcG=0, NPcGtil=0, NPcH=0, NPcHB=0, NPcHDD=0, NPcHW=0, NPcHWB=0, NPcW=0, NPlB=0, NPlHD=0, NPlHe=0, NPlHl=0, NPlHq=0, NPlHu=0, NPlWB=0, NPlWq=0, NPlWu=0, NPqB=0, NPqHD=0, NPqHQ=0, NPqHd=0, NPqHu=0, NPqW=0, NPuB=0, NPuHD=0, NPuW=0, QED=4, QNP=1, WEIGHTED=6

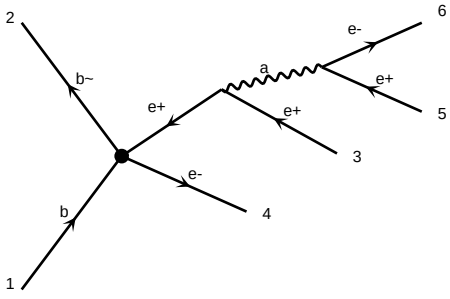

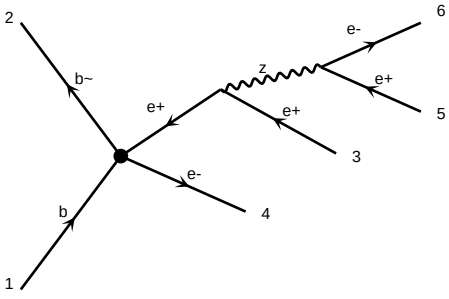

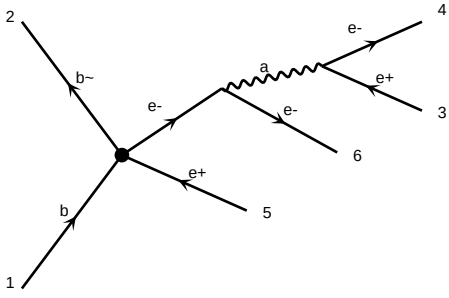

diagram 1855 NP=1, NPcG=0, NPcGtil=0, NPcH=0, NPcHB=0, NPcHDD=0, NPcHW=0, NPcHWB=0, NPcW=0, NPlB=0, NPlHD=0, NPlHe=0, NPlHl=0, NPlHq=0, NPlHu=0, NPlWB=0, NPlWq=0, NPlWu=0, NPqB=0, NPqHD=0, NPqHQ=0, NPqHd=0, NPqHu=0, NPqW=0, NPuB=0, NPuHD=0, NPuW=0, QED=4, QNP=1, WEIGHTED=6

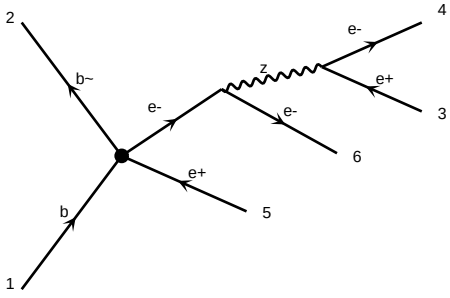

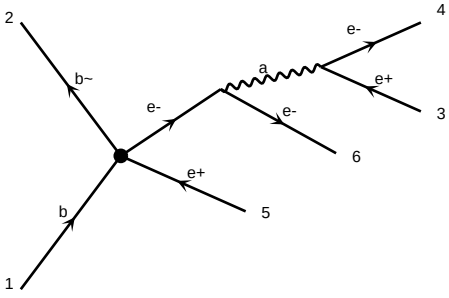

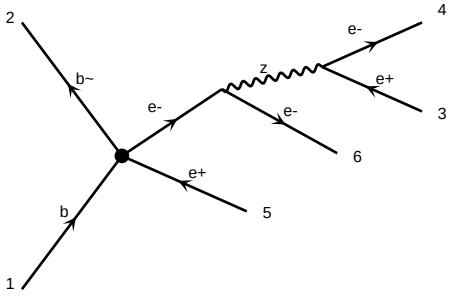

diagram 1858 NP=1, NPcG=0, NPcGtil=0, NPcH=0, NPcHB=0, NPcHDD=0, NPcHW=0, NPcHWB=0, NPcW=0, NPlB=0, NPlHD=0, NPlHe=0, NPlHl=0, NPlHq=0, NPlHu=0, NPlWB=0, NPlWq=0, NPlWu=0, NPqB=0, NPqHD=0, NPqHQ=0, NPqHd=0, NPqHu=0, NPqW=0, NPuB=0, NPuHD=0, NPuW=0, QED=4, QNP=1, WEIGHTED=6

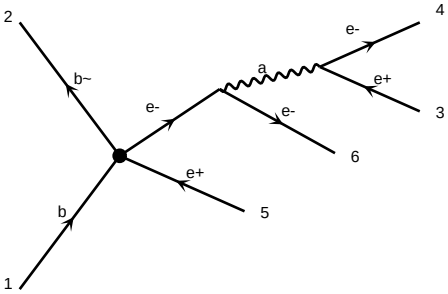

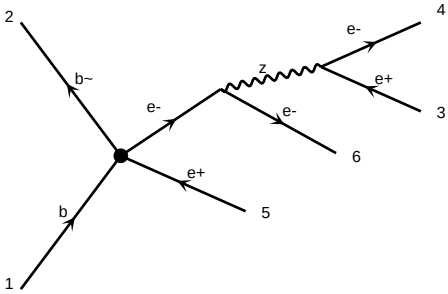

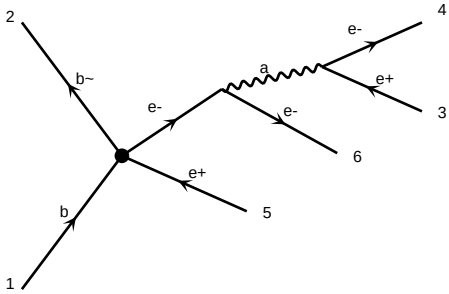

diagram 1861 NP=1, NPcG=0, NPcGtil=0, NPcH=0, NPcHB=0, NPcHDD=0, NPcHW=0, NPcHWB=0, NPcW=0, NPeHB=0, NPeW=0, NPlB=0, NPlH=0, NPlHB=0, NPlW=0, NPqB=0, NPqG=0, NPqH=0, NPqW=0, NPuB=0, NPuG=0, NPuH=0, NPuW=0, NPdB=0, NPdG=0, NPdH=0, NPdW=0, NPlequ1=0, NPlequ3=0, NPquqd1=0, NPquqd8=0, NPqu1=0, NPqu8=0, NPqd1=0, NPqd8=0, NPeu=0, NPed=0, NPle=0, NPlu=0, NPld=0, NPqe=0, NPll=0, NPlq1=0, NPlq3=0, NPeq=0, NPee=0, NPuu=0, NPud1=0, NPud8=0, NPdd1=0, NPdd8=0, NPlu1=0, NPlu8=0, NPld1=0, NPld

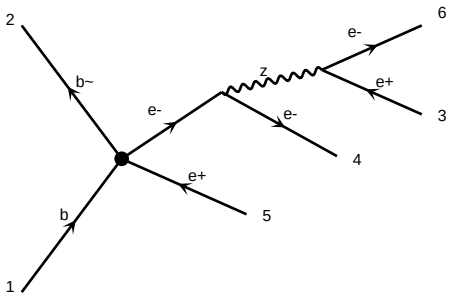

diagram 1876 NP=1, NPcG=0, NPcGtil=0, NPcH=0, NPcHB=0, NPcHDD=0, NPcHW=0, NPcHWB=0, NPcW=0, NPlB=0, NPlH=0, NPlHB=0, NPlHW=0, NPlW=0, NPqMixed=0, NPqMixed8=0, NPqMixed1=0, NPqMixed3=0, NPqMixed11=0, NPqMixed13=0, NPqMixed33=0, NPqMixed38=0, NPqMixed83=0, NPqMixed88=0, NPqqq1=0, NPqqq11=0, NPqqq3=0, NPqqq31=0, NPquqd1=0, NPquqd11=0, NPquqd8=0, NPquqd81=0, NPqu1=0, NPqu8=0, NPqd1=0, NPqd8=0, NPlq1=0, NPlq3=0, NPeu=0, NPed=0, NPle=0, NPlu=0, NPld=0, NPqe=0, NPHel=0, NPHmix=0, NPHQ=0, NPHu=0, NPHd=0, NPHudV=0, NPuG=0, NPuW=0, NPuB=0, NPdG=0, NPdW=0, NPdB=0, NPeW=0, NPeB=0, NPHDD=0, NPHW=0, NPHB=0, NPHWB=0, NPW=0, NPG=0, NPtil=0, NPlq1=0, NPlq3=0, NPeu=0, NPed=0, NPle=0, NPlu=0, NPld=0, NPqe=0, NPHel=0, NPHmix=0, NPHQ=0, NPHu=0, NPHd=0, NPHudV=0, NPuG=0, NPuW=0, NPuB=0, NPdG=0, NPdW=0, NPdB=0, NPeW=0, NPeB=0, NPHDD=0, NPHW=0, NPHB=0, NPHWB=0, NPW=0, NPG=0, NPtil=0

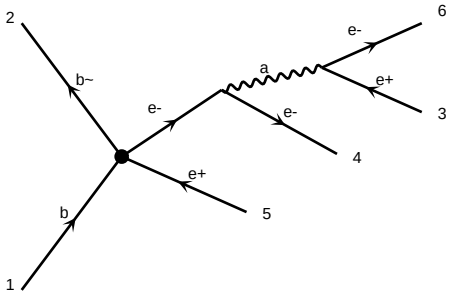

diagram 1879 NP=1, NPcG=0, NPcGtil=0, NPcH=0, NPcHB=0, NPcHDD=0, NPcHW=0, NPcHWB=0, NPcW=0, NPlB=0, NPlH=0, NPlHB=0, NPlHW=0, NPlW=0, NPqMixed=0, NPqMixed8=0, NPqMixed1=0, NPqMixed3=0, NPqMixed11=0, NPqMixed13=0, NPqMixed33=0, NPqMixed38=0, NPqMixed83=0, NPqMixed88=0, NPqqq1=0, NPqqq11=0, NPqqq3=0, NPqqq31=0, NPquqd1=0, NPquqd11=0, NPquqd8=0, NPquqd81=0, NPqu1=0, NPqu8=0, NPqd1=0, NPqd8=0, NPlq1=0, NPlq3=0, NPeu=0, NPed=0, NPle=0, NPlu=0, NPld=0, NPqe=0, NPHel=0, NPHmix=0, NPHQ=0, NPHu=0, NPHd=0, NPHudV=0, NPuG=0, NPuW=0, NPuB=0, NPdG=0, NPdW=0, NPdB=0, NPeW=0, NPeB=0, NPHDD=0, NPHW=0, NPHB=0, NPHWB=0, NPW=0, NPG=0, NPtil=0, NPlq1=0, NPlq3=0, NPeu=0, NPed=0, NPle=0, NPlu=0, NPld=0, NPqe=0, NPHel=0, NPHmix=0, NPHQ=0, NPHu=0, NPHd=0, NPHudV=0, NPuG=0, NPuW=0, NPuB=0, NPdG=0, NPdW=0, NPdB=0, NPeW=0, NPeB=0, NPHDD=0, NPHW=0, NPHB=0, NPHWB=0, NPW=0, NPG=0, NPtil=0

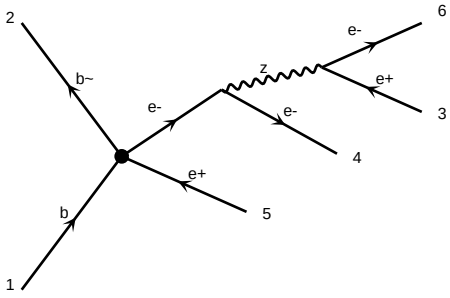

diagram 1882 NP=1, NPcG=0, NPcGtil=0, NPcH=0, NPcHB=0, NPcHDD=0, NPcHW=0, NPcHWB=0, NPcW=0, NPlB=0, NPlH=0, NPlHB=0, NPlHW=0, NPlW=0, NPqMixed=0, NPqMixed8=0, NPqMixed1=0, NPqMixed3=0, NPqMixed11=0, NPqMixed13=0, NPqMixed33=0, NPqMixed38=0, NPqMixed83=0, NPqMixed88=0, NPqqq1=0, NPqqq11=0, NPqqq3=0, NPqqq31=0, NPquqd1=0, NPquqd11=0, NPquqd8=0, NPquqd81=0, NPqu1=0, NPqu8=0, NPqd1=0, NPqd8=0, NPlq1=0, NPlq3=0, NPeu=0, NPed=0, NPle=0, NPlu=0, NPld=0, NPqe=0, NPHel=0, NPHmix=0, NPHQ=0, NPHu=0, NPHd=0, NPHudV=0, NPuG=0, NPuW=0, NPuB=0, NPdG=0, NPdW=0, NPdB=0, NPeW=0, NPeB=0, NPHDD=0, NPHW=0, NPHB=0, NPHWB=0, NPW=0, NPG=0, NPtil=0, NPlq1=0, NPlq3=0, NPeu=0, NPed=0, NPle=0, NPlu=0, NPld=0, NPqe=0, NPHel=0, NPHmix=0, NPHQ=0, NPHu=0, NPHd=0, NPHudV=0, NPuG=0, NPuW=0, NPuB=0, NPdG=0, NPdW=0, NPdB=0, NPeW=0, NPeB=0, NPHDD=0, NPHW=0, NPHB=0, NPHWB=0, NPW=0, NPG=0, NPtil=0

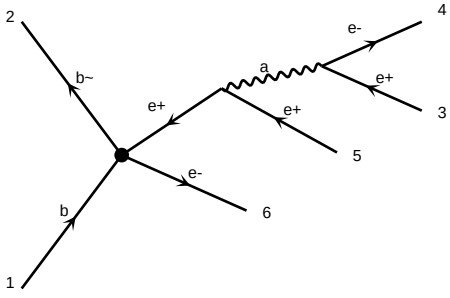

diagram 1885 NP=1, NPcG=0, NPcGtil=0, NPcH=0, NPcHB=0, NPcHDD=0, NPcHW=0, NPcHWB=0, NPcW=0, NPlB=0, NPlH=0, NPlHB=0, NPlHW=0, NPlW=0, NPqMixed=0, NPqMixed8=0, NPqMixed1=0, NPqMixed3=0, NPqMixed11=0, NPqMixed13=0, NPqMixed33=0, NPqMixed38=0, NPqMixed83=0, NPqMixed88=0, NPqqq1=0, NPqqq11=0, NPqqq3=0, NPqqq31=0, NPquqd1=0, NPquqd11=0, NPquqd8=0, NPquqd81=0, NPqu1=0, NPqu8=0, NPqd1=0, NPqd8=0, NPlq1=0, NPlq3=0, NPeu=0, NPed=0, NPle=0, NPlu=0, NPld=0, NPqe=0, NPHel=0, NPHmix=0, NPHQ=0, NPHu=0, NPHd=0, NPHudV=0, NPuG=0, NPuW=0, NPuB=0, NPdG=0, NPdW=0, NPdB=0, NPeW=0, NPeB=0, NPHDD=0, NPHW=0, NPHB=0, NPHWB=0, NPW=0, NPG=0, NPtil=0, NPlq1=0, NPlq3=0, NPeu=0, NPed=0, NPle=0, NPlu=0, NPld=0, NPqe=0, NPHel=0, NPHmix=0, NPHQ=0, NPHu=0, NPHd=0, NPHudV=0, NPuG=0, NPuW=0, NPuB=0, NPdG=0, NPdW=0, NPdB=0, NPeW=0, NPeB=0, NPHDD=0, NPHW=0, NPHB=0, NPHWB=0, NPW=0, NPG=0, NPtil=0

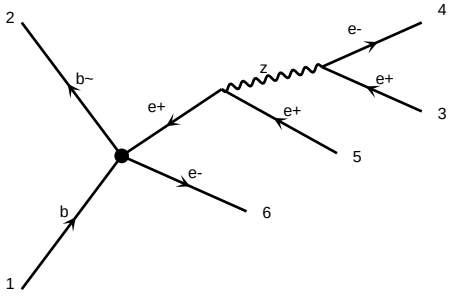

diagram 1888 NP=1, NPcG=0, NPcGtil=0, NPcH=0, NPcHB=0, NPcHDD=0, NPcHW=0, NPcHWB=0, NPcW=0, NPlB=0, NPlH=0, NPlHB=0, NPlHW=0, NPlW=0, NPqMixed=0, NPqMixed8=0, NPqMixed1=0, NPqMixed3=0, NPqMixed11=0, NPqMixed13=0, NPqMixed33=0, NPqMixed38=0, NPqMixed83=0, NPqMixed88=0, NPqqq1=0, NPqqq11=0, NPqqq3=0, NPqqq31=0, NPquqd1=0, NPquqd11=0, NPquqd8=0, NPquqd81=0, NPqu1=0, NPqu8=0, NPqd1=0, NPqd8=0, NPlq1=0, NPlq3=0, NPeu=0, NPed=0, NPle=0, NPlu=0, NPld=0, NPqe=0, NPHel=0, NPHmix=0, NPHQ=0, NPHu=0, NPHd=0, NPHudV=0, NPuG=0, NPuW=0, NPuB=0, NPdG=0, NPdW=0, NPdB=0, NPeW=0, NPeB=0, NPHDD=0, NPHW=0, NPHB=0, NPHWB=0, NPW=0, NPG=0, NPtil=0, NPlq1=0, NPlq3=0, NPeu=0, NPed=0, NPle=0, NPlu=0, NPld=0, NPqe=0, NPHel=0, NPHmix=0, NPHQ=0, NPHu=0, NPHd=0, NPHudV=0, NPuG=0, NPuW=0, NPuB=0, NPdG=0, NPdW=0, NPdB=0, NPeW=0, NPeB=0, NPHDD=0, NPHW=0, NPHB=0, NPHWB=0, NPW=0, NPG=0, NPtil=0

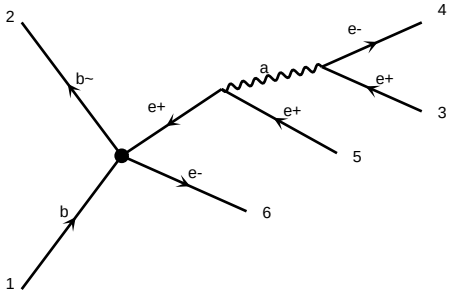

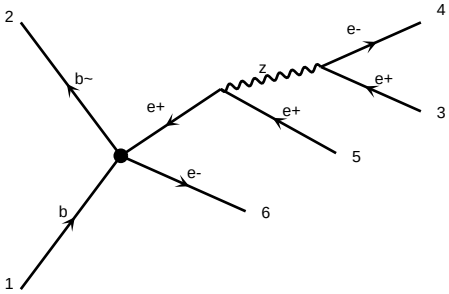

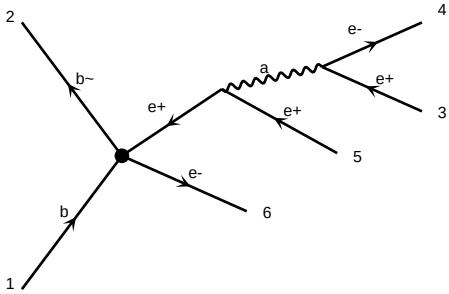

diagram 1891 NP=1, NPcG=0, NPcGtil=0, NPcH=0, NPcHB=0, NPcHDD=0, NPcHW=0, NPcHWB=0, NPcW=0, NPlB=0, NPlH=0, NPlHD=0, NPlHe=0, NPlHl=0, NPlW=0, NPlWB=0, NPlWH=0, NPlWW=0, NPqB=0, NPqG=0, NPqH=0, NPqHD=0, NPqHU=0, NPqW=0, NPuB=0, NPuG=0, NPuH=0, NPuW=0, NPuWB=0, NPuWH=0, NPuWW=0, NPcHl=0, NPcHe=0, NPcHq=0, NPcHu=0, NPcll=0, NPcqq=0, NPcqu=0, NPcuu=0, NPlq=0, NPqe=0, NPqq=0, NPqu=0, NPuu=0, NPcHbox

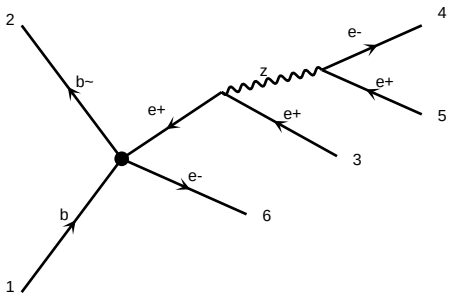

diagram 1906 NP=1, NPcG=0, NPcGtil=0, NPcH=0, NPcHB=0, NPcHDD=0, NPcHW=0, NPcHWB=0, NPcW=0, NPcbH=0, NPcll=0, NPcqq1=0, NPcqq3=0, NPctG=0, NPctH=0, NPctW=0

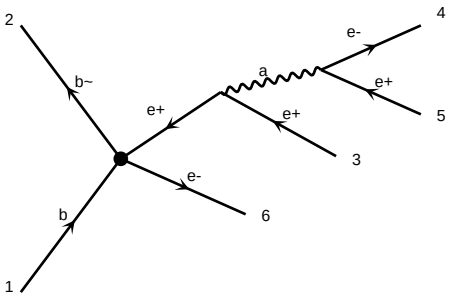

diagram 1907 NP=1, NPcG=0, NPcGtil=0, NPcH=0, NPcHB=0, NPcHDD=0, NPcHW=0, NPcHWB=0, NPcW=0, NPcbH=0, NPcll=0, NPcqq1=0, NPcqq3=0, NPctG=0, NPctH=0, NPctW=0

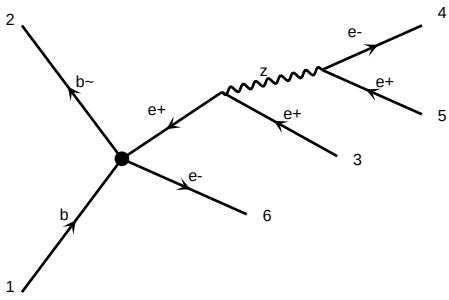

diagram 1908 NP=1, NPcG=0, NPcGtil=0, NPcH=0, NPcHB=0, NPcHDD=0, NPcHW=0, NPcHWB=0, NPcW=0, NPcbH=0, NPcll=0, NPcqq1=0, NPcqq3=0, NPctG=0, NPctH=0, NPctW=0

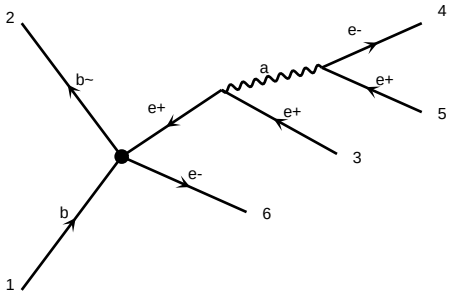

diagram 1909 NP=1, NPcG=0, NPcGtil=0, NPcH=0, NPcHB=0, NPcHDD=0, NPcHW=0, NPcHWB=0, NPcW=0, NPcbH=0, NPcll=0, NPcqq1=0, NPcqq3=0, NPctG=0, NPctH=0, NPctW=0

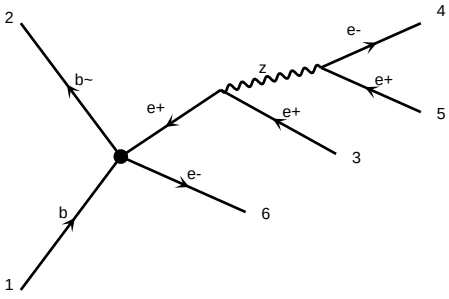

diagram 1910 NP=1, NPcG=0, NPcGtil=0, NPcH=0, NPcHB=0, NPcHDD=0, NPcHW=0, NPcHWB=0, NPcW=0, NPcbH=0, NPcll=0, NPcqq1=0, NPcqq3=0, NPctG=0, NPctH=0, NPctW=0

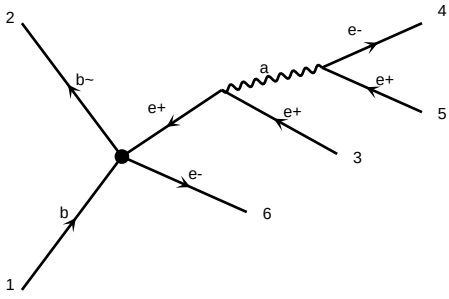

diagram 1911 NP=1, NPcG=0, NPcGtil=0, NPcH=0, NPcHB=0, NPcHDD=0, NPcHW=0, NPcHWB=0, NPcW=0, NPcbH=0, NPcll=0, NPcqq1=0, NPcqq3=0, NPctG=0, NPctH=0, NPctW=0

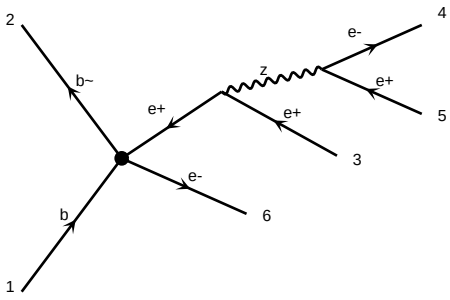

diagram 1912 NP=1, NPcG=0, NPcGtil=0, NPcH=0, NPcHB=0, NPcHDD=0, NPcHW=0, NPcHWB=0, NPcW=0, NPcbH=0, NPcll=0, NPcqq1=0, NPcqq3=0, NPctG=0, NPctH=0, NPctW=0

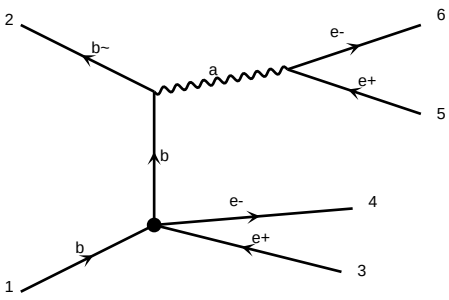

diagram 1913 NP=1, NPcG=0, NPcGtil=0, NPcH=0, NPcHB=0, NPcHDD=0, NPcHW=0, NPcHWB=0, NPcW=0, NPcbH=0, NPcll=0, NPcqq1=0, NPcqq3=0, NPctG=0, NPctH=0, NPctW=0

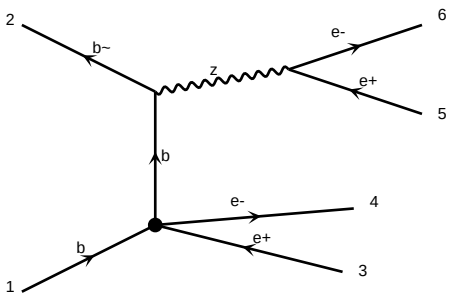

diagram 1914 NP=1, NPcG=0, NPcGtil=0, NPcH=0, NPcHB=0, NPcHDD=0, NPcHW=0, NPcHWB=0, NPcW=0, NPcbH=0, NPcll=0, NPcqq1=0, NPcqq3=0, NPctG=0, NPctH=0, NPctW=0

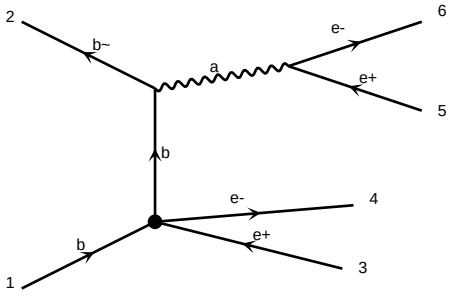

diagram 1915 NP=1, NPcG=0, NPcGtil=0, NPcH=0, NPcHB=0, NPcHDD=0, NPcHW=0, NPcHWB=0, NPcW=0, NPcbH=0, NPcll=0, NPcqq1=0, NPcqq3=0, NPctG=0, NPctH=0, NPctW=0

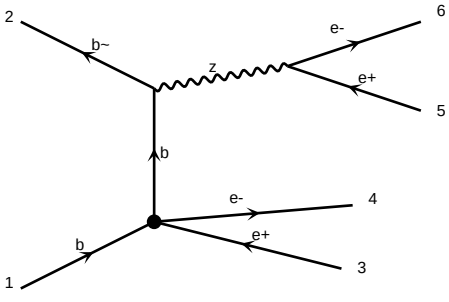

diagram 1916 NP=1, NPcG=0, NPcGtil=0, NPcH=0, NPcHB=0, NPcHDD=0, NPcHW=0, NPcHWB=0, NPcW=0, NPcbH=0, NPcll=0, NPcqq1=0, NPcqq3=0, NPctG=0, NPctH=0, NPctW=0

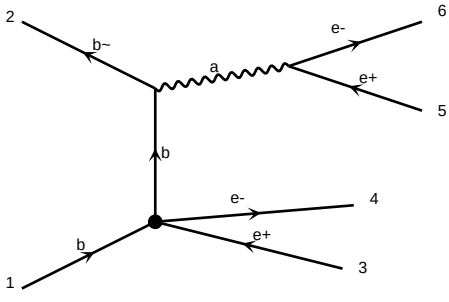

diagram 1917 NP=1, NPcG=0, NPcGtil=0, NPcH=0, NPcHB=0, NPcHDD=0, NPcHW=0, NPcHWB=0, NPcW=0, NPcbH=0, NPcll=0, NPcqq1=0, NPcqq3=0, NPctG=0, NPctH=0, NPctW=0

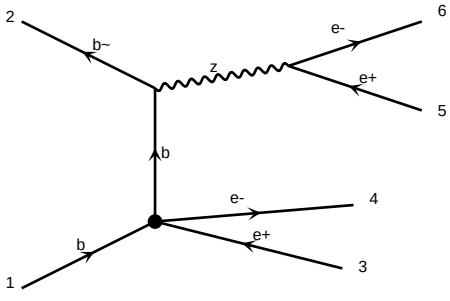

diagram 1918 NP=1, NPcG=0, NPcGtil=0, NPcH=0, NPcHB=0, NPcHDD=0, NPcHW=0, NPcHWB=0, NPcW=0, NPcbH=0, NPcll=0, NPcqq1=0, NPcqq3=0, NPctG=0, NPctH=0, NPctW=0

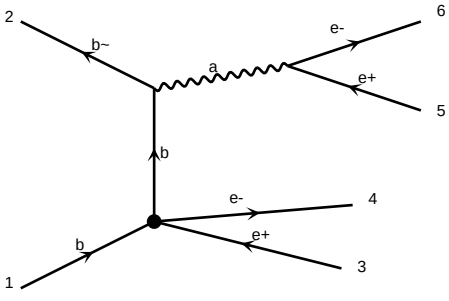

diagram 1919 NP=1, NPcG=0, NPcGtil=0, NPcH=0, NPcHB=0, NPcHDD=0, NPcHW=0, NPcHWB=0, NPcW=0, NPcbH=0, NPcll=0, NPcqq1=0, NPcqq3=0, NPctG=0, NPctH=0, NPctW=0

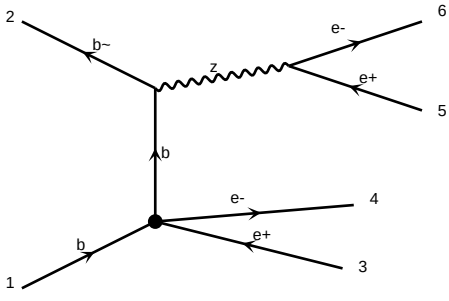

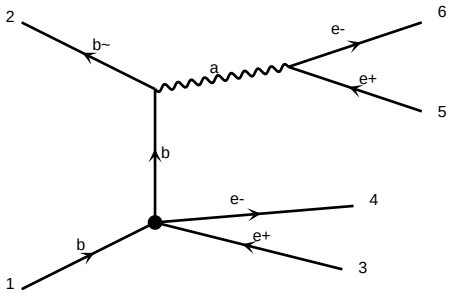

diagram 1921 NP=1, NPcG=0, NPcGtil=0, NPcH=0, NPcHB=0, NPcHDD=0, NPcHW=0, NPcHWB=0, NPcW=0, NPlB=0, NPlHD=0, NPlHe=0, NPlHl=0, NPlHq=0, NPlHu=0, NPlWB=0, NPlWq=0, NPlWu=0, NPuB=0, NPuW=0, NPqq1=0, NPqq3=0, NPqu1=0, NPqu8=0, NPqd1=0, NPqd8=0, NPlq1=0, NPlq3=0, NPlu=0, NPld=0, NPle=0, NPeu=0, NPed=0, NPqe=0, QED=4, QNP=2, WEIGHTED=6

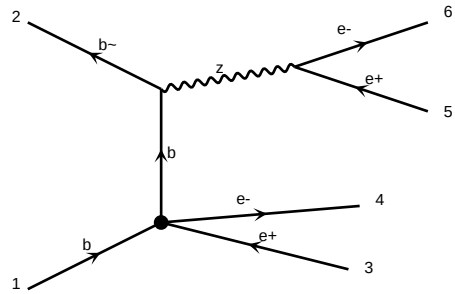

diagram 1922 NP=1, NPcG=0, NPcGtil=0, NPcH=0, NPcHB=0, NPcHDD=0, NPcHW=0, NPcHWB=0, NPcW=0, NPlB=0, NPlHD=0, NPlHe=0, NPlHl=0, NPlHq=0, NPlHu=0, NPlWB=0, NPlWq=0, NPlWu=0, NPuB=0, NPuW=0, NPqq1=0, NPqq3=0, NPqu1=0, NPqu8=0, NPqd1=0, NPqd8=0, NPlq1=0, NPlq3=0, NPlu=0, NPld=0, NPle=0, NPeu=0, NPed=0, NPqe=0, QED=4, QNP=2, WEIGHTED=6

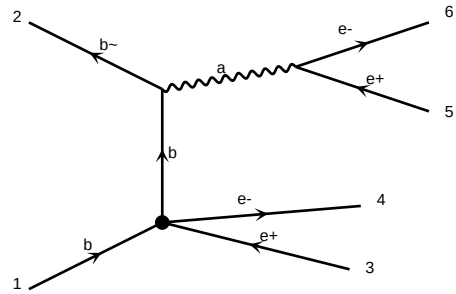

diagram 1923 NP=1, NPcG=0, NPcGtil=0, NPcH=0, NPcHB=0, NPcHDD=0, NPcHW=0, NPcHWB=0, NPcW=0, NPlB=0, NPlHD=0, NPlHe=0, NPlHl=0, NPlHq=0, NPlHu=0, NPlWB=0, NPlWq=0, NPlWu=0, NPuB=0, NPuW=0, NPqq1=0, NPqq3=0, NPqu1=0, NPqu8=0, NPqd1=0, NPqd8=0, NPlq1=0, NPlq3=0, NPlu=0, NPld=0, NPle=0, NPeu=0, NPed=0, NPqe=0, QED=4, QNP=2, WEIGHTED=6

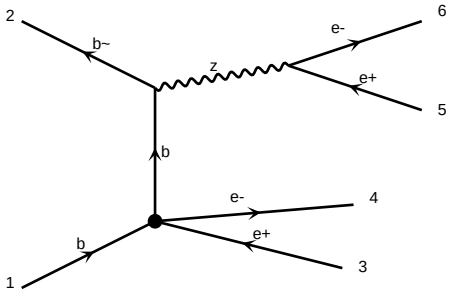

diagram 1924 NP=1, NPcG=0, NPcGtil=0, NPcH=0, NPcHB=0, NPcHDD=0, NPcHW=0, NPcHWB=0, NPcW=0, NPlB=0, NPlHD=0, NPlHe=0, NPlHl=0, NPlHq=0, NPlHu=0, NPlWB=0, NPlWq=0, NPlWu=0, NPuB=0, NPuW=0, NPqq1=0, NPqq3=0, NPqu1=0, NPqu8=0, NPqd1=0, NPqd8=0, NPlq1=0, NPlq3=0, NPlu=0, NPld=0, NPle=0, NPeu=0, NPed=0, NPqe=0, QED=4, QNP=2, WEIGHTED=6

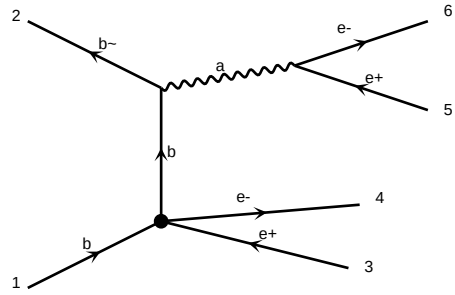

diagram 1925 NP=1, NPcG=0, NPcGtil=0, NPcH=0, NPcHB=0, NPcHDD=0, NPcHW=0, NPcHWB=0, NPcW=0, NPlB=0, NPlHD=0, NPlHe=0, NPlHl=0, NPlHq=0, NPlHu=0, NPlWB=0, NPlWq=0, NPlWu=0, NPuB=0, NPuW=0, NPqq1=0, NPqq3=0, NPqu1=0, NPqu8=0, NPqd1=0, NPqd8=0, NPlq1=0, NPlq3=0, NPlu=0, NPld=0, NPle=0, NPeu=0, NPed=0, NPqe=0, QED=4, QNP=2, WEIGHTED=6

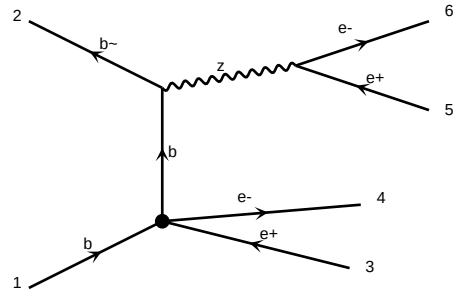

diagram 1926 NP=1, NPcG=0, NPcGtil=0, NPcH=0, NPcHB=0, NPcHDD=0, NPcHW=0, NPcHWB=0, NPcW=0, NPlB=0, NPlHD=0, NPlHe=0, NPlHl=0, NPlHq=0, NPlHu=0, NPlWB=0, NPlWq=0, NPlWu=0, NPuB=0, NPuW=0, NPqq1=0, NPqq3=0, NPqu1=0, NPqu8=0, NPqd1=0, NPqd8=0, NPlq1=0, NPlq3=0, NPlu=0, NPld=0, NPle=0, NPeu=0, NPed=0, NPqe=0, QED=4, QNP=2, WEIGHTED=6

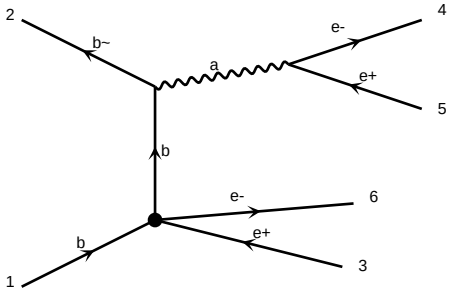

diagram 1927 NP=1, NPcG=0, NPcGtil=0, NPcH=0, NPcHB=0, NPcHDD=0, NPcHW=0, NPcHWB=0, NPcW=0, NPlB=0, NPlHD=0, NPlHe=0, NPlHl=0, NPlHq=0, NPlHu=0, NPlWB=0, NPlWq=0, NPlWu=0, NPuB=0, NPuW=0, NPqq1=0, NPqq3=0, NPqu1=0, NPqu8=0, NPqd1=0, NPqd8=0, NPlq1=0, NPlq3=0, NPlu=0, NPld=0, NPle=0, NPeu=0, NPed=0, NPqe=0, QED=4, QNP=2, WEIGHTED=6

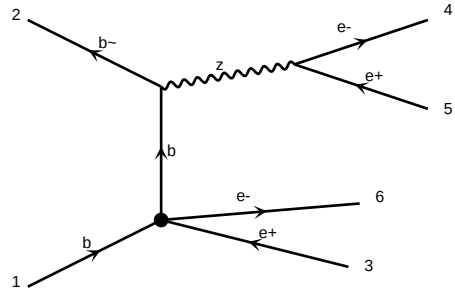

diagram 1928 NP=1, NPcG=0, NPcGtil=0, NPcH=0, NPcHB=0, NPcHDD=0, NPcHW=0, NPcHWB=0, NPcW=0, NPlB=0, NPlHD=0, NPlHe=0, NPlHl=0, NPlHq=0, NPlHu=0, NPlWB=0, NPlWq=0, NPlWu=0, NPuB=0, NPuW=0, NPqq1=0, NPqq3=0, NPqu1=0, NPqu8=0, NPqd1=0, NPqd8=0, NPlq1=0, NPlq3=0, NPlu=0, NPld=0, NPle=0, NPeu=0, NPed=0, NPqe=0, QED=4, QNP=2, WEIGHTED=6

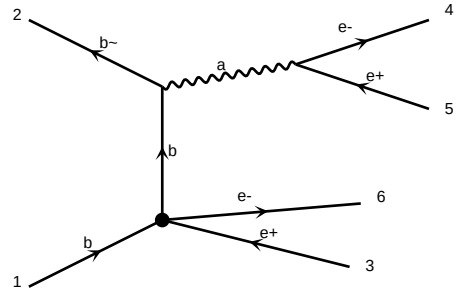

diagram 1929 NP=1, NPcG=0, NPcGtil=0, NPcH=0, NPcHB=0, NPcHDD=0, NPcHW=0, NPcHWB=0, NPcW=0, NPlB=0, NPlHD=0, NPlHe=0, NPlHl=0, NPlHq=0, NPlHu=0, NPlWB=0, NPlWq=0, NPlWu=0, NPuB=0, NPuW=0, NPqq1=0, NPqq3=0, NPqu1=0, NPqu8=0, NPqd1=0, NPqd8=0, NPlq1=0, NPlq3=0, NPlu=0, NPld=0, NPle=0, NPeu=0, NPed=0, NPqe=0, QED=4, QNP=2, WEIGHTED=6

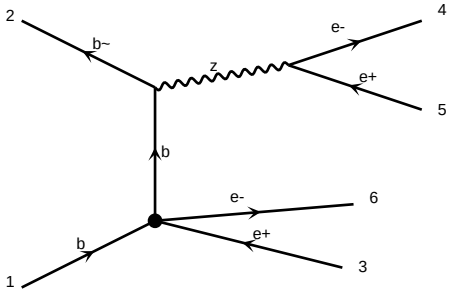

diagram 1930 NP=1, NPcG=0, NPcGtil=0, NPcH=0, NPcHB=0, NPcHDD=0, NPcHW=0, NPcHWB=0, NPcW=0, NPlB=0, NPlHD=0, NPlHe=0, NPlHl=0, NPlHq=0, NPlHu=0, NPlWB=0, NPlWq=0, NPlWu=0, NPuB=0, NPuW=0, NPqq1=0, NPqq3=0, NPqu1=0, NPqu8=0, NPqd1=0, NPqd8=0, NPlq1=0, NPlq3=0, NPlu=0, NPld=0, NPle=0, NPeu=0, NPed=0, NPqe=0, QED=4, QNP=2, WEIGHTED=6

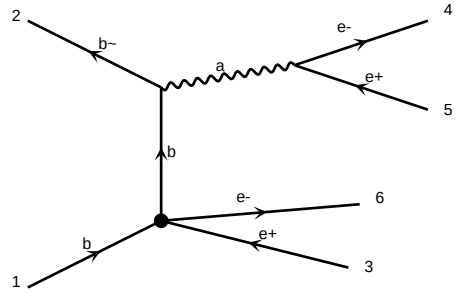

diagram 1931 NP=1, NPcG=0, NPcGtil=0, NPcH=0, NPcHB=0, NPcHDD=0, NPcHW=0, NPcHWB=0, NPcW=0, NPlB=0, NPlHD=0, NPlHe=0, NPlHl=0, NPlHq=0, NPlHu=0, NPlWB=0, NPlWq=0, NPlWu=0, NPuB=0, NPuW=0, NPqq1=0, NPqq3=0, NPqu1=0, NPqu8=0, NPqd1=0, NPqd8=0, NPlq1=0, NPlq3=0, NPlu=0, NPld=0, NPle=0, NPeu=0, NPed=0, NPqe=0, QED=4, QNP=2, WEIGHTED=6

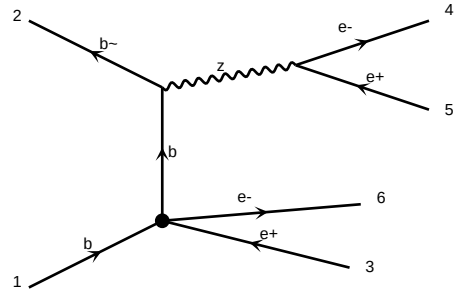

diagram 1932 NP=1, NPcG=0, NPcGtil=0, NPcH=0, NPcHB=0, NPcHDD=0, NPcHW=0, NPcHWB=0, NPcW=0, NPlB=0, NPlHD=0, NPlHe=0, NPlHl=0, NPlHq=0, NPlHu=0, NPlWB=0, NPlWq=0, NPlWu=0, NPuB=0, NPuW=0, NPqq1=0, NPqq3=0, NPqu1=0, NPqu8=0, NPqd1=0, NPqd8=0, NPlq1=0, NPlq3=0, NPlu=0, NPld=0, NPle=0, NPeu=0, NPed=0, NPqe=0, QED=4, QNP=2, WEIGHTED=6

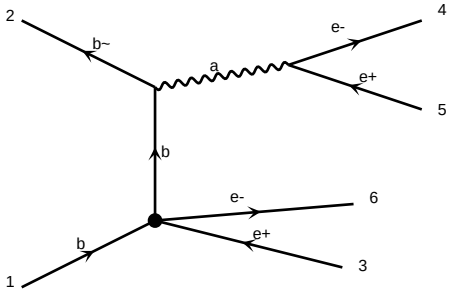

diagram 1933 NP=1, NPcG=0, NPcGtil=0, NPcH=0, NPcHB=0, NPcHDD=0, NPcHW=0, NPcHWB=0, NPcW=0, NPlB=0, NPlHD=0, NPlHe=0, NPlHl=0, NPlHq=0, NPlHu=0, NPlWB=0, NPlWq=0, NPlWu=0, NPuB=0, NPuW=0, NPqq1=0, NPqq3=0, NPqu1=0, NPqu8=0, NPqd1=0, NPqd8=0, NPlq1=0, NPlq3=0, NPlu=0, NPld=0, NPle=0, NPeu=0, NPed=0, NPqe=0, QED=4, QNP=2, WEIGHTED=6

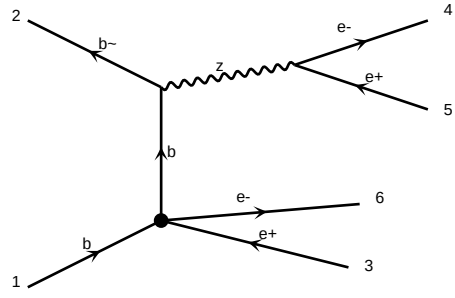

diagram 1934 NP=1, NPcG=0, NPcGtil=0, NPcH=0, NPcHB=0, NPcHDD=0, NPcHW=0, NPcHWB=0, NPcW=0, NPlB=0, NPlHD=0, NPlHe=0, NPlHl=0, NPlHq=0, NPlHu=0, NPlWB=0, NPlWq=0, NPlWu=0, NPuB=0, NPuW=0, NPqq1=0, NPqq3=0, NPqu1=0, NPqu8=0, NPqd1=0, NPqd8=0, NPlq1=0, NPlq3=0, NPlu=0, NPld=0, NPle=0, NPeu=0, NPed=0, NPqe=0, QED=4, QNP=2, WEIGHTED=6

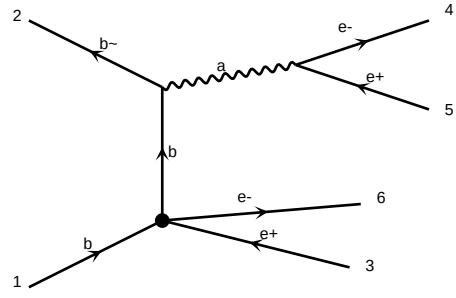

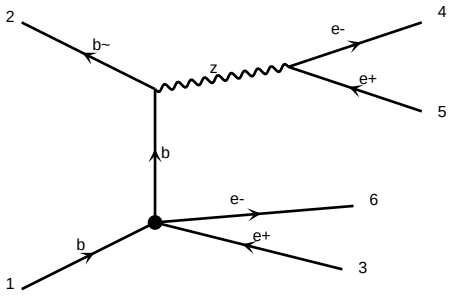

diagram 1936 NP=1, NPcG=0, NPcGtil=0, NPcH=0, NPcHB=0, NPcHBtil=0, NPcHDD=0, NPcHW=0, NPcHWB=0, NPcHWtil=0, NPcHWtilB=0, NPcKtil=0, NPcW=0, NPcWtil=0, NPdB=0, NPdBtil=0, NPdG=0, NPdGtil=0, NPdH=0, NPdW=0, NPdWtil=0, NPeB=0, NPeBtil=0, NPeH=0, NPeW=0, NPeWtil=0, NPlB=0, NPlBtil=0, NPlH=0, NPlW=0, NPlWtil=0, NPqB=0, NPqBtil=0, NPqG=0, NPqGtil=0, NPqH=0, NPqHtil=0, NPqW=0, NPqWtil=0, NPuB=0, NPuBtil=0, NPuG=0, NPuGtil=0, NPuH=0, NPuW=0, NPuWtil=0, NPuu1=0, NPuu8=0, NPud1=0, NPud8=0, NPuu1=0, NPuu8=0, NPud1=0, NPud8=0, NPquu1=0, NPquu8=0, NPqud1=0, NPqud8=0, NPquu1=0, NPquu8=0, NPqud1=0, NPqud8=0, NPqq11=0, NPqq18=0, NPqq31=0, NPqq38=0, NPqq11=0, NPqq18=0, NPqq31=0, NPqq38=0, NPlq1=0, NPlq3=0, NPlq1=0, NPlq3=0, NPeq=0, NPeq=0, NPlu=0, NPlu=0, NPld=0, NPld=0, NPeu=0, NPeu=0, NPed=0, NPed=0, NPle=0, NPle=0, NPll1=0, NPll=0, NPll=0, NPll

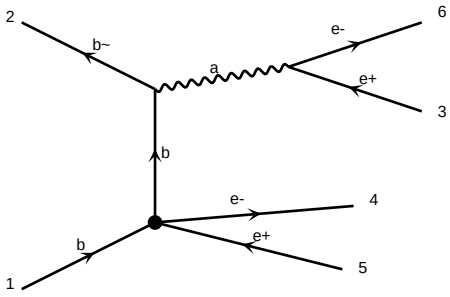

diagram 1951 NP=1, NPcG=0, NPcGtil=0, NPcH=0, NPcHB=0, NPcHBtil=0, NPcHDD=0, NPcHW=0, NPcHWB=0, NPcHWtil=0, NPcHWtil=0, NPcHWtil

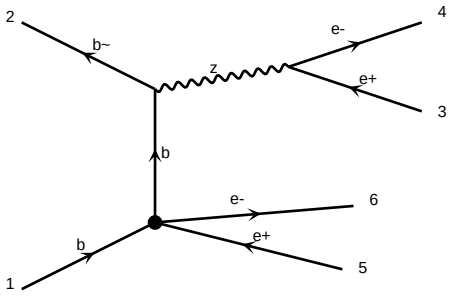

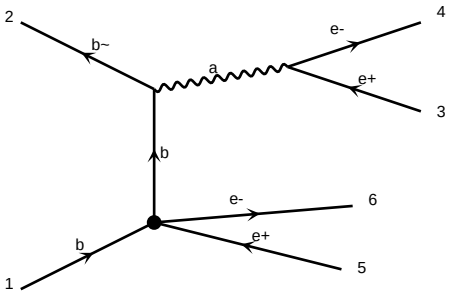

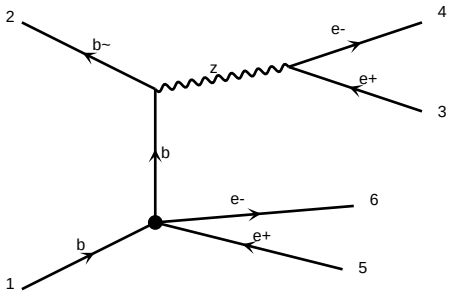

diagram 1966 NP=1, NPcG=0, NPcGtil=0, NPcH=0, NPcHB=0, NPcHDD=0, NPcHW=0, NPcHWB=0, NPcW=0, NPeHB=0, NPeW=0, NPlB=0, NPlH=0, NPlHD=0, NPlHW=0, NPlL=0, NPlQ=0, NPlebQ=0, NPleH=0, NPleW=0, NPqB=0, NPqH=0, NPqW=0, NPuB=0, NPuH=0, NPuW=0, NPdB=0, NPdH=0, NPdW=0, NPquM=0, NPqtM=0, NPqtqM=0, NPqbM=0, NPqtbM=0, NPlequM=0, NPlqdM=0, NPlqtM=0, NPeuM=0, NPedM=0, NPleM=0, NPlM=0, NPqM=0, NPuM=0, NPdM=0, NPeM=0, NPtaM=0, NPmuM=0, NPtM=0, NPbM=0, NPcM=0, NPs

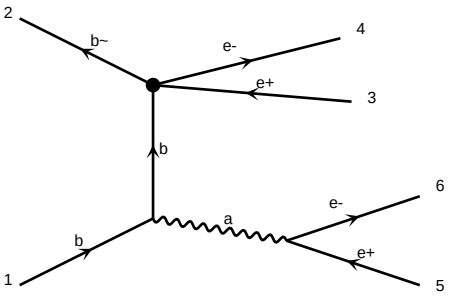

diagram 1981 NP=1, NPcG=0, NPcGtil=0, NPcH=0, NPcHB=0, NPcHW=0, NPcHWB=0, NPcHDD=0, NPcW=0, NPcll=0, NPclq1=0, NPclq3=0, NPcqq1=0, NPcqq3=0, NPcqq11=0, NPcqq31=0, NPcuu=0, NPcud1=0, NPcud8=0, NPcle=0, NPclu=0, NPcld=0, NPcqe=0, NPceu=0, NPced=0, NPcledq=0, NPclequ1=0, NPclequ3=0, NPcquqd1=0, NPcquqd8=0, NPcllll=0, NPclled=0, NPcqqqq1=0, NPcqqqq3=0, NPcqqqq11=0, NPcqqqq31=0, NPcuuuu=0, NPcuudd1=0, NPcuudd8=0, NPcddddd=0, NPcquuu1=0, NPcquuu8=0, NPcqddd1=0, NPcqddd8=0, NPcqquu1=0, NPcqquu8=0, NPcqqdd1=0, NPcqqdd8=0, NPcqqud1=0, NPcqqud8=0, NPcqqqu1=0, NPcqqqu8=0, NPcqqqd1=0, NPcqqqd8=0, NPcuuud1=0, NPcuuud8=0, NPcqquqd1=0, NPcqquqd8=0, NPcqqqd1=0, NPcqqqd8=0, NPcqqlu1=0, NPcqqlu8=0, NPcqqld1=0, NPcqqld8=0, NPcquqd1=0, NPcquqd8=0, NPcqqlq1=0, NPcqqlq3=0, NPcquqd1=0, NPcqu

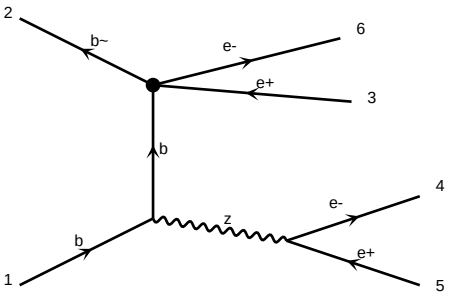

diagram 1996 NP=1, NPcG=0, NPcGtil=0, NPcH=0, NPcHB=0, NPcHDD=0, NPcHW=0, NPcHWB=0, NPcW=0, NPeB=0, NPeH=0, NPeW=0, NPlB=0, NPlH=0, NPlHD=0, NPlW=0, NPqB=0, NPqH=0, NPqW=0, NPuB=0, NPuH=0, NPuW=0, NPdB=0, NPdH=0, NPdW=0, NPlequ1=0, NPlequ3=0, NPquqd1=0, NPquqd8=0, NPqu1=0, NPqu8=0, NPqd1=0, NPqd8=0, NPeu=0, NPed=0, NPld=0, NPle=0, NPlu=0, NPqe=0, NPud1=0, NPud8=0, NPeHB=0, NPeHW=0, NPeWB=0, NPlHB=0, NPlHW=0, NPlWB=0, NPqHB=0, NPqHW=0, NPqWB=0, NPuHB=0, NPuHW=0, NPuWB=0, NPdHB=0, NPdHW=0, NPdWB=0, NPlequ3B=0, NPlequ3W=0, NPquqd1B=0, NPquqd1W=0, NPquqd8B=0, NPquqd8W=0, NPqu1B=0, NPqu1W=0, NPqu8B=0, NPqu8W=0, NPqd1B=0, NPqd1W=0, NPqd8B=0, NPqd8W=0, NPeuB=0, NPeuW=0, NPedB=0, NPedW=0, NPldB=0, NPldW=0, NPleB=0, NPleW=0, NPluB=0, NPluW=0, NPqeB=0, NPqeW=0, NPud1B=0, NPud1W=0, NPud8B=0, NPud8W=0, NPHDD=0, NPHl1=0, NPHl3=0, NPHe=0, NPHq1=0, NPHq3=0, NPHu=0, NPHd=0, NPHud=0, NPll1=0, NPlq1=0, NPlq3=0, NPee=0, NPeq=0, NPqq1=0, NPqq3=0, NPuu=0, NPdd=0, NPeu=0, NPed=0, NPld=0, NPle=0, NPlu=0, NPqe=0, NPud1=0, NPud8=0, NPlequ1=0, NPlequ3=0, NPquqd1=0, NPquqd8=0, NPqu1=0, NPqu8=0, NPqd1=0, NPqd8=0, QED=3, QNP=2, QCD=0, QNP^2==1 @1

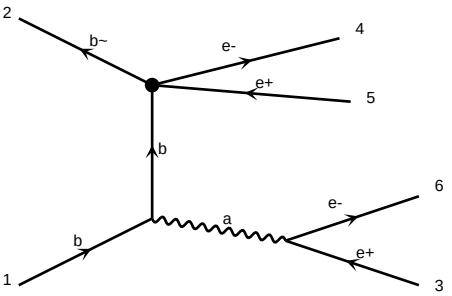

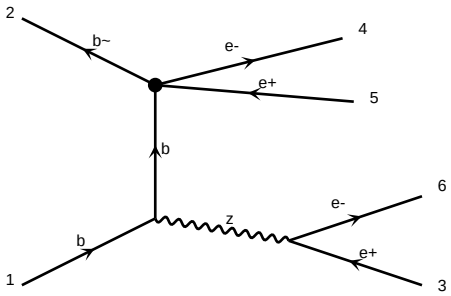

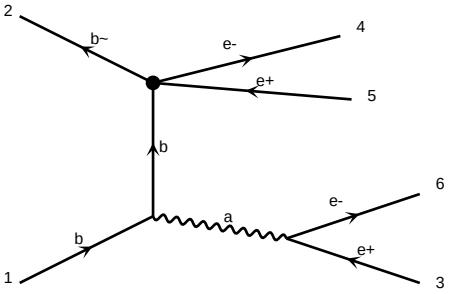

diagram 1999 NP=1, NPcG=0, NPcGtil=0, NPcH=0, NPcHB=0, NPcHDD=0, NPcHW=0, NPcHWB=0, NPcW=0, NPeB=0, NPeH=0, NPeW=0, NPlB=0, NPlH=0, NPlHD=0, NPlW=0, NPqB=0, NPqH=0, NPqW=0, NPuB=0, NPuH=0, NPuW=0, NPdB=0, NPdH=0, NPdW=0, NPlequ1=0, NPlequ3=0, NPquqd1=0, NPquqd8=0, NPqu1=0, NPqu8=0, NPqd1=0, NPqd8=0, NPeu=0, NPed=0, NPld=0, NPle=0, NPlu=0, NPqe=0, NPud1=0, NPud8=0, NPeHB=0, NPeHW=0, NPeWB=0, NPlHB=0, NPlHW=0, NPlWB=0, NPqHB=0, NPqHW=0, NPqWB=0, NPuHB=0, NPuHW=0, NPuWB=0, NPdHB=0, NPdHW=0, NPdWB=0, NPlequ3B=0, NPlequ3W=0, NPquqd1B=0, NPquqd1W=0, NPquqd8B=0, NPquqd8W=0, NPqu1B=0, NPqu1W=0, NPqu8B=0, NPqu8W=0, NPqd1B=0, NPqd1W=0, NPqd8B=0, NPqd8W=0, NPeuB=0, NPeuW=0, NPedB=0, NPedW=0, NPldB=0, NPldW=0, NPleB=0, NPleW=0, NPluB=0, NPluW=0, NPqeB=0, NPqeW=0, NPud1B=0, NPud1W=0, NPud8B=0, NPud8W=0, NPHDD=0, NPHl1=0, NPHl3=0, NPHe=0, NPHq1=0, NPHq3=0, NPHu=0, NPHd=0, NPHud=0, NPll1=0, NPlq1=0, NPlq3=0, NPee=0, NPeq=0, NPqq1=0, NPqq3=0, NPuu=0, NPdd=0, NPeu=0, NPed=0, NPld=0, NPle=0, NPlu=0, NPqe=0, NPud1=0, NPud8=0, NPlequ1=0, NPlequ3=0, NPquqd1=0, NPquqd8=0, NPqu1=0, NPqu8=0, NPqd1=0, NPqd8=0, QED=3, QNP=2, QCD=0, QNP^2==1 @2

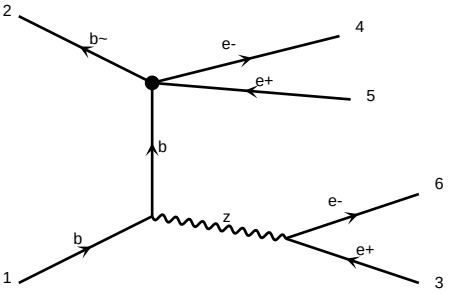

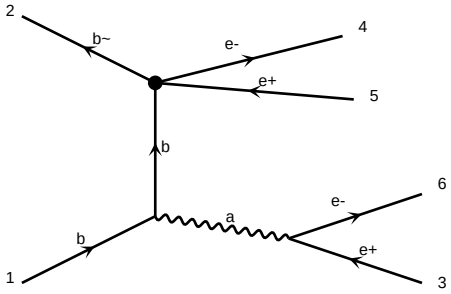

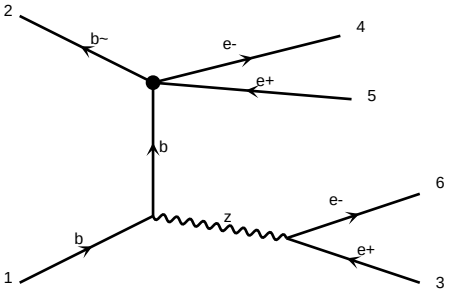

diagram 2002 NP=1, NPcG=0, NPcGtil=0, NPcH=0, NPcHB=0, NPcHDD=0, NPcHW=0, NPcHWB=0, NPcW=0, NPeB=0, NPeH=0, NPeW=0, NPlB=0, NPlH=0, NPlHD=0, NPlW=0, NPqB=0, NPqH=0, NPqW=0, NPuB=0, NPuH=0, NPuW=0, NPdB=0, NPdH=0, NPdW=0, NPlequ1=0, NPlequ3=0, NPquqd1=0, NPquqd8=0, NPqu1=0, NPqu8=0, NPqd1=0, NPqd8=0, NPeu=0, NPed=0, NPld=0, NPle=0, NPlu=0, NPqe=0, NPud1=0, NPud8=0, NPeHB=0, NPeHW=0, NPeWB=0, NPlHB=0, NPlHW=0, NPlWB=0, NPqHB=0, NPqHW=0, NPqWB=0, NPuHB=0, NPuHW=0, NPuWB=0, NPdHB=0, NPdHW=0, NPdWB=0, NPlequ3B=0, NPlequ3W=0, NPquqd1B=0, NPquqd1W=0, NPquqd8B=0, NPquqd8W=0, NPqu1B=0, NPqu1W=0, NPqu8B=0, NPqu8W=0, NPqd1B=0, NPqd1W=0, NPqd8B=0, NPqd8W=0, NPeuB=0, NPeuW=0, NPedB=0, NPedW=0, NPldB=0, NPldW=0, NPleB=0, NPleW=0, NPluB=0, NPluW=0, NPqeB=0, NPqeW=0, NPud1B=0, NPud1W=0, NPud8B=0, NPud8W=0, NPHDD=0, NPHl1=0, NPHl3=0, NPHe=0, NPHq1=0, NPHq3=0, NPHu=0, NPHd=0, NPHud=0, NPll1=0, NPlq1=0, NPlq3=0, NPee=0, NPeq=0, NPqq1=0, NPqq3=0, NPuu=0, NPdd=0, NPeu=0, NPed=0, NPld=0, NPle=0, NPlu=0, NPqe=0, NPud1=0, NPud8=0, NPlequ1=0, NPlequ3=0, NPquqd1=0, NPquqd8=0, NPqu1=0, NPqu8=0, NPqd1=0, NPqd8=0, QED=3, QNP=2, QCD=0, QNP^2==1 @3

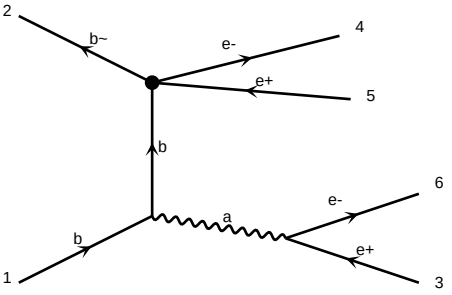

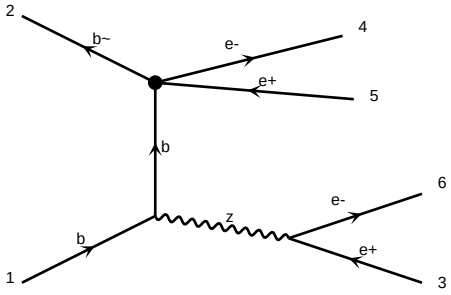

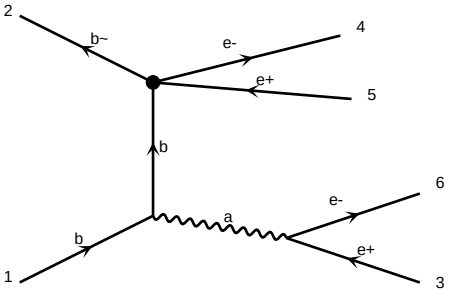

diagram 2005 NP=1, NPcG=0, NPcGtil=0, NPcH=0, NPcHB=0, NPcHDD=0, NPcHW=0, NPcHWB=0, NPcW=0, NPeB=0, NPeH=0, NPeW=0, NPlB=0, NPlH=0, NPlHD=0, NPlW=0, NPqB=0, NPqH=0, NPqW=0, NPuB=0, NPuH=0, NPuW=0, NPdB=0, NPdH=0, NPdW=0, NPlequ1=0, NPlequ3=0, NPquqd1=0, NPquqd8=0, NPqu1=0, NPqu8=0, NPqd1=0, NPqd8=0, NPeu=0, NPed=0, NPld=0, NPle=0, NPlu=0, NPqe=0, NPud1=0, NPud8=0, NPeHB=0, NPeHW=0, NPeWB=0, NPlHB=0, NPlHW=0, NPlWB=0, NPqHB=0, NPqHW=0, NPqWB=0, NPuHB=0, NPuHW=0, NPuWB=0, NPdHB=0, NPdHW=0, NPdWB=0, NPlequ3B=0, NPlequ3W=0, NPquqd1B=0, NPquqd1W=0, NPquqd8B=0, NPquqd8W=0, NPqu1B=0, NPqu1W=0, NPqu8B=0, NPqu8W=0, NPqd1B=0, NPqd1W=0, NPqd8B=0, NPqd8W=0, NPeuB=0, NPeuW=0, NPedB=0, NPedW=0, NPldB=0, NPldW=0, NPleB=0, NPleW=0, NPluB=0, NPluW=0, NPqeB=0, NPqeW=0, NPud1B=0, NPud1W=0, NPud8B=0, NPud8W=0, NPHDD=0, NPHl1=0, NPHl3=0, NPHe=0, NPHq1=0, NPHq3=0, NPHu=0, NPHd=0, NPHud=0, NPll1=0, NPlq1=0, NPlq3=0, NPee=0, NPeq=0, NPqq1=0, NPqq3=0, NPuu=0, NPdd=0, NPeu=0, NPed=0, NPld=0, NPle=0, NPlu=0, NPqe=0, NPud1=0, NPud8=0, NPlequ1=0, NPlequ3=0, NPquqd1=0, NPquqd8=0, NPqu1=0, NPqu8=0, NPqd1=0, NPqd8=0, QED=3, QNP=2, QCD=0, QNP^2==1 @4

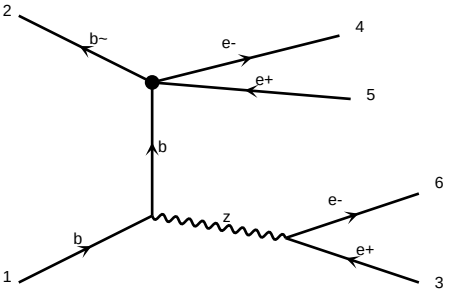

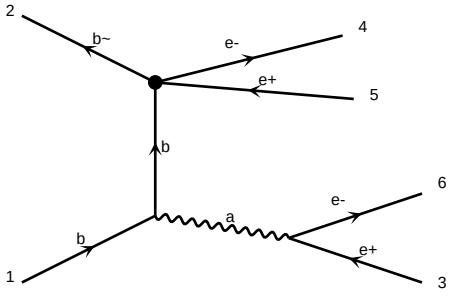

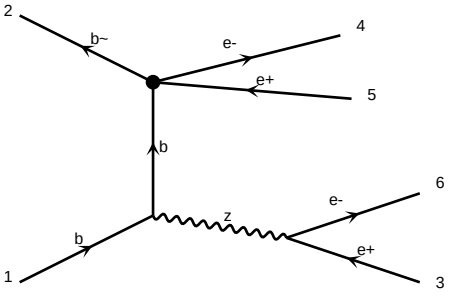

diagram 2008 NP=1, NPcG=0, NPcGtil=0, NPcH=0, NPcHB=0, NPcHDD=0, NPcHW=0, NPcHWB=0, NPcW=0, NPeB=0, NPeH=0, NPeW=0, NPlB=0, NPlH=0, NPlHD=0, NPlW=0, NPqB=0, NPqH=0, NPqW=0, NPuB=0, NPuH=0, NPuW=0, NPdB=0, NPdH=0, NPdW=0, NPlequ1=0, NPlequ3=0, NPquqd1=0, NPquqd8=0, NPqu1=0, NPqu8=0, NPqd1=0, NPqd8=0, NPeu=0, NPed=0, NPld=0, NPle=0, NPlu=0, NPqe=0, NPud1=0, NPud8=0, NPeHB=0, NPeHW=0, NPeWB=0, NPlHB=0, NPlHW=0, NPlWB=0, NPqHB=0, NPqHW=0, NPqWB=0, NPuHB=0, NPuHW=0, NPuWB=0, NPdHB=0, NPdHW=0, NPdWB=0, NPlequ3B=0, NPlequ3W=0, NPquqd1B=0, NPquqd1W=0, NPquqd8B=0, NPquqd8W=0, NPqu1B=0, NPqu1W=0, NPqu8B=0, NPqu8W=0, NPqd1B=0, NPqd1W=0, NPqd8B=0, NPqd8W=0, NPeuB=0, NPeuW=0, NPedB=0, NPedW=0, NPldB=0, NPldW=0, NPleB=0, NPleW=0, NPluB=0, NPluW=0, NPqeB=0, NPqeW=0, NPud1B=0, NPud1W=0, NPud8B=0, NPud8W=0, NPHDD=0, NPHl1=0, NPHl3=0, NPHe=0, NPHq1=0, NPHq3=0, NPHu=0, NPHd=0, NPHud=0, NPll1=0, NPlq1=0, NPlq3=0, NPee=0, NPeq=0, NPqq1=0, NPqq3=0, NPuu=0, NPdd=0, NPeu=0, NPed=0, NPld=0, NPle=0, NPlu=0, NPqe=0, NPud1=0, NPud8=0, NPlequ1=0, NPlequ3=0, NPquqd1=0, NPquqd8=0, NPqu1=0, NPqu8=0, NPqd1=0, NPqd8=0, QED=3, QNP=2, QCD=0, QNP^2==1 @5

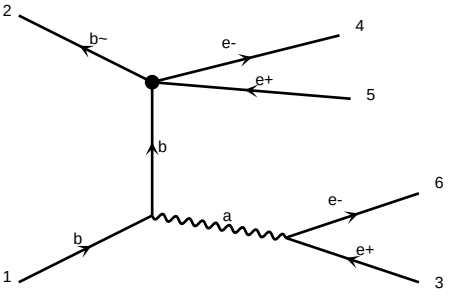

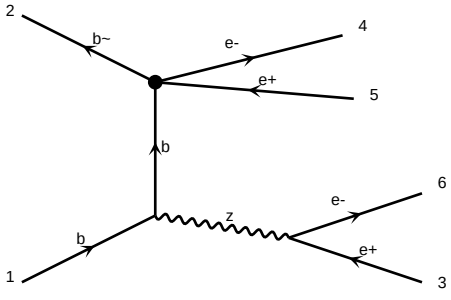

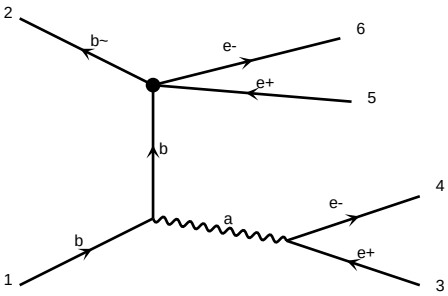

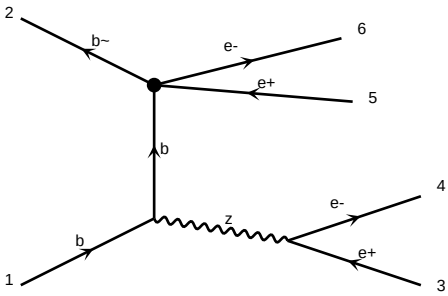

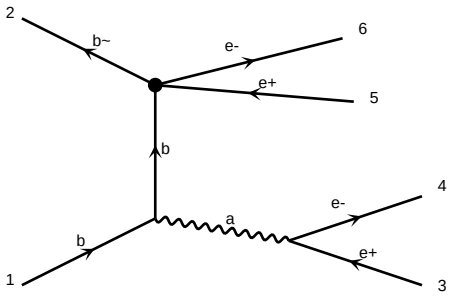

diagram 2011 NP=1, NPcG=0, NPcGtil=0, NPcH=0, NPcHB=0, NPcHDD=0, NPcHW=0, NPcHWB=0, NPcW=0, NPeHB=0, NPeHW=0, NPeW=0, NPlB=0, NPlH=0, NPlHB=0, NPlHW=0, NPlW=0, NPuB=0, NPuG=0, NPuH=0, NPuW=0, NPdB=0, NPdG=0, NPdH=0, NPdW=0, NPqqq1=0, NPqqq11=0, NPqqq3=0, NPquqd1=0, NPquqd11=0, NPquqd8=0, NPlq1=0, NPlq3=0, NPeq=0, NPlu=0, NPld=0, NPqu1=0, NPqu8=0, NPqd1=0, NPqd8=0, NPeu=0, NPed=0, NPledq=0, NPlequ1=0, NPlequ3=0, NPtG=0, NPtu=0, NPtd=0, NPtB=0, NPtW=0, NPtH=0, NPQQ1=0, NPQQ11=0, NPQQ8=0, NPQt1=0, NPQt8=0, NPQb1=0, NPQb8=0, NPtt1=0, NPQtu1=0, NPQtu8=0, NPQtd1=0, NPQtd8=0, NPtq1=0, NPtq8=0, NPQlm1=0, NPQlm3=0, NPQe=0, NPtl=0, NPte=0, NPQl1=0, NPQl3=0, NPtu=0, NPtd=0, NPeu=0, NPed=0, NPlu=0, NPld=0, NPqe=0, NPql1=0, NPql3=0, NPqu1=0, NPqu8=0, NPqd1=0, NPqd8=0, NPlq1=0, NPlq3