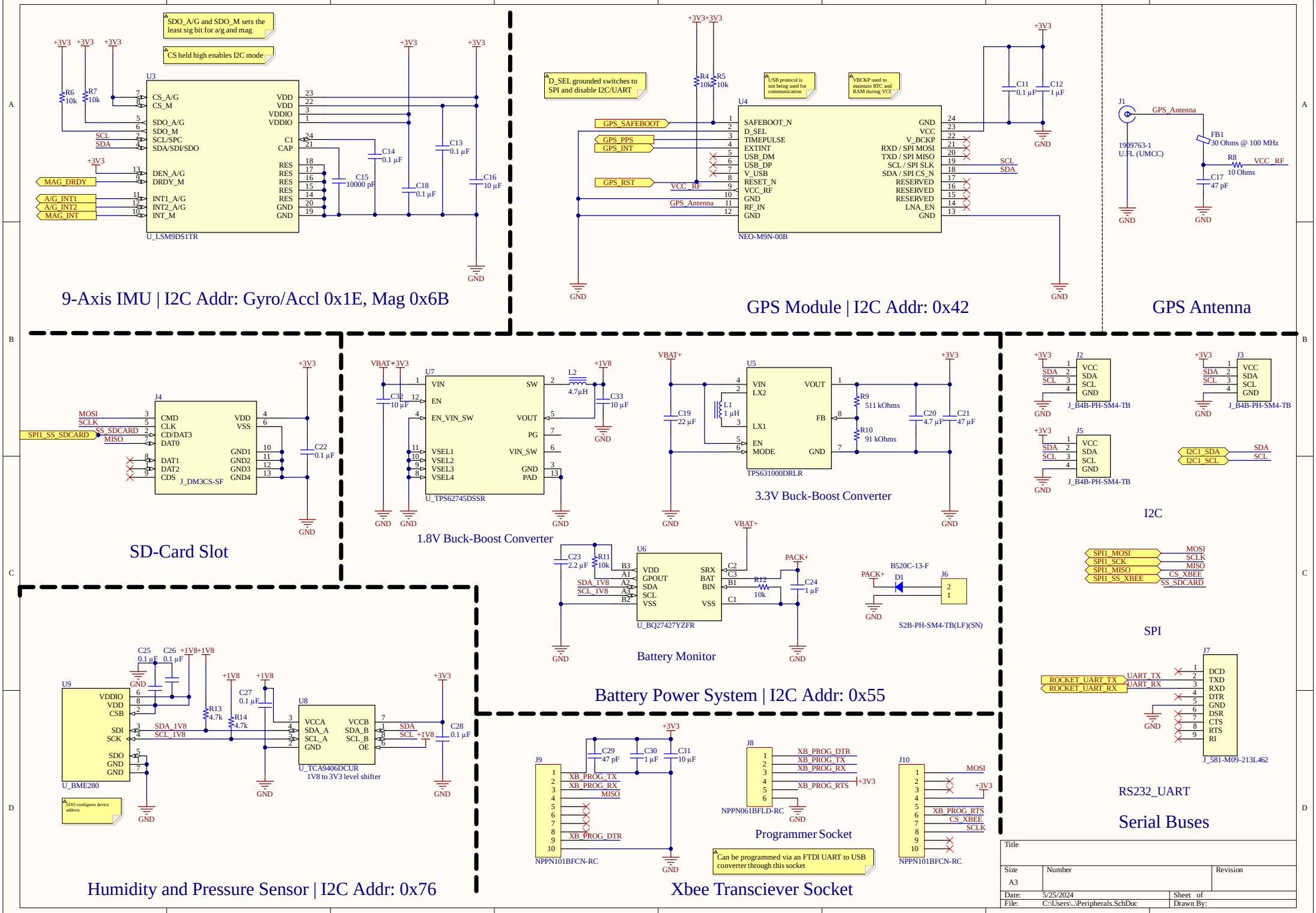
SDO_A/G and SDO_M sets the least sig bit for a/g and mag
CS held high enables I2C mode
U3
U_LSM9DS1TR
9-Axis IMU | I2C Addr: Gyro/Accl 0x1E, Mag 0x6B
D_SEL grounded switches to SPI and disable I2C/UART
USB protocol is not being used for communication
VBCKP used to maintain RTC and RAM during VCC
U4
NEO-M9N-00B
GPS Module | I2C Addr: 0x42
J1
1909763-1
U.FL (UMCC)
GPS_Antenna
FB1
30 Ohms @ 100 MHz
R8
10 Ohms
VCC_RF
C17
47 pF
GPS Antenna
J4
J_DM3CS-SF
SD-Card Slot
U7
U_TPS62745DSSR
1.8V Buck-Boost Converter
U5
TPS631000DRLR
3.3V Buck-Boost Converter
J2
J3
J5
J_B4B-PH-SM4-TB
I2C
U6
U_BQ27427YZFR
Battery Monitor
B520C-13-F
S2B-PH-SM4-TB(LF)(SN)
Battery Power System | I2C Addr: 0x55
SPI
J7
J_581-M09-213L462
RS232_UART
Serial Buses
U9
U_BME280
SDO configures device address
U8
U_TCA9406DCUR
1V8 to 3V3 level shifter
Humidity and Pressure Sensor | I2C Addr: 0x76
J9
NPPN101BFCN-RC
J8
NPPN061BFLD-RC
Programmer Socket
Can be programmed via an FTDI UART to USB converter through this socket
J10
Xbee Transciever Socket
Title
Size
A3
Number
Revision
Date: 5/25/2024
File: C:\Users\..\Peripherals.SchDoc
Sheet of
Drawn By:

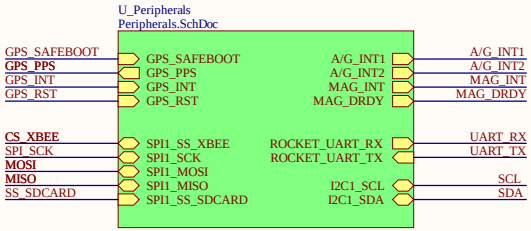

Peripherals

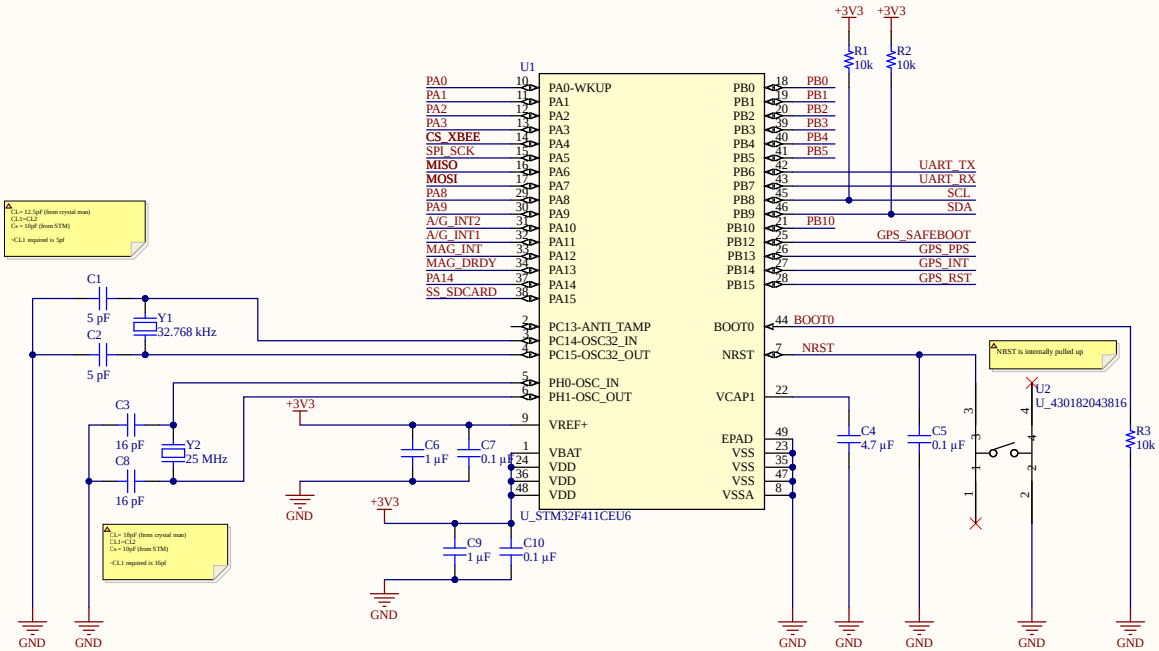

MCU

Title		
Size A3	Number	Revision
Date: 5/25/2024	Sheet of	
File: C:\Users\..\Telemetry_System.SchDoc	Drawn By:	

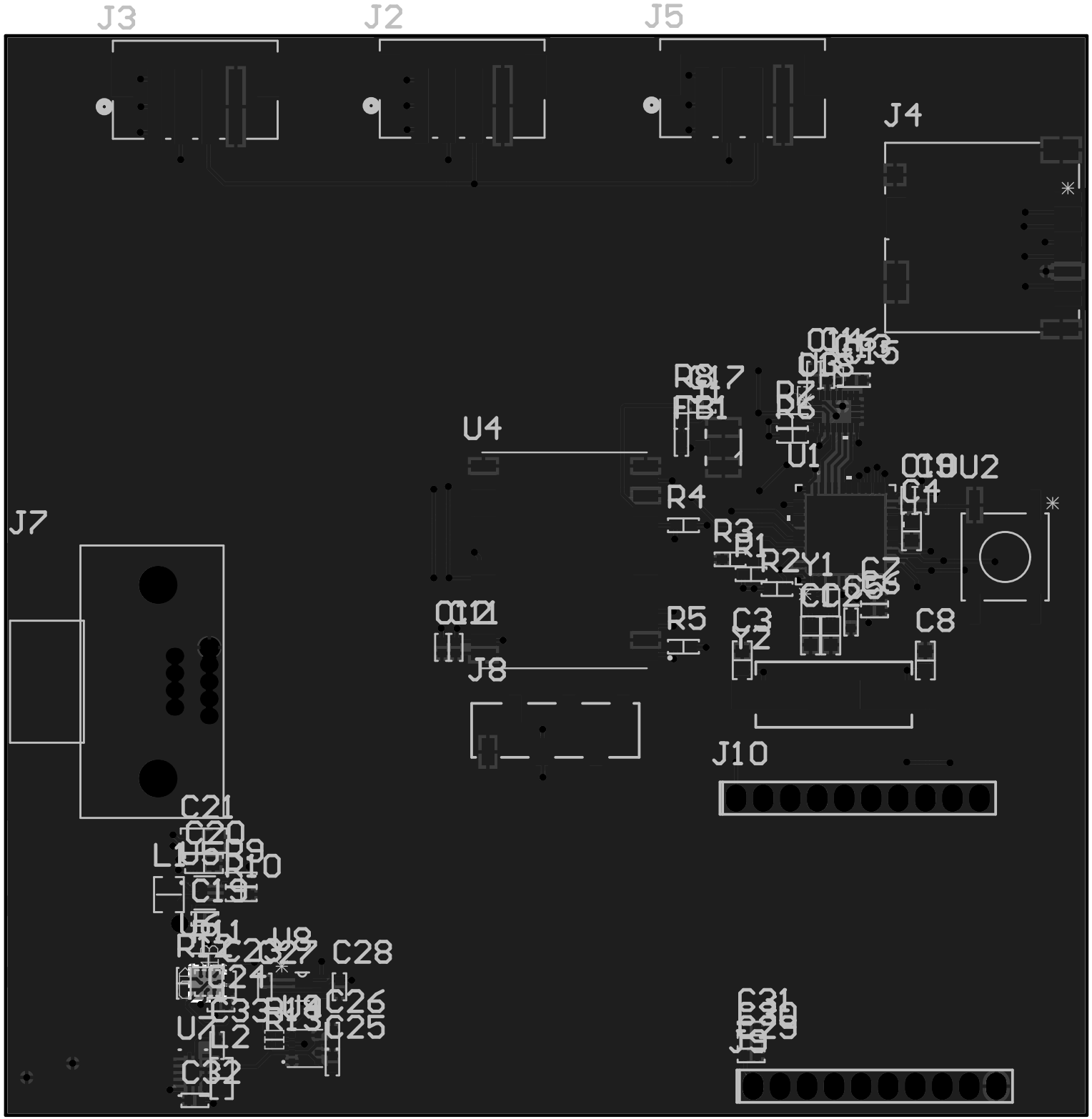
J3
J2
J5
J4
U4
U1
U2
R4
R3
R5
C3
C8
J7
J8
J10
C21
C28
C26
C25
C31