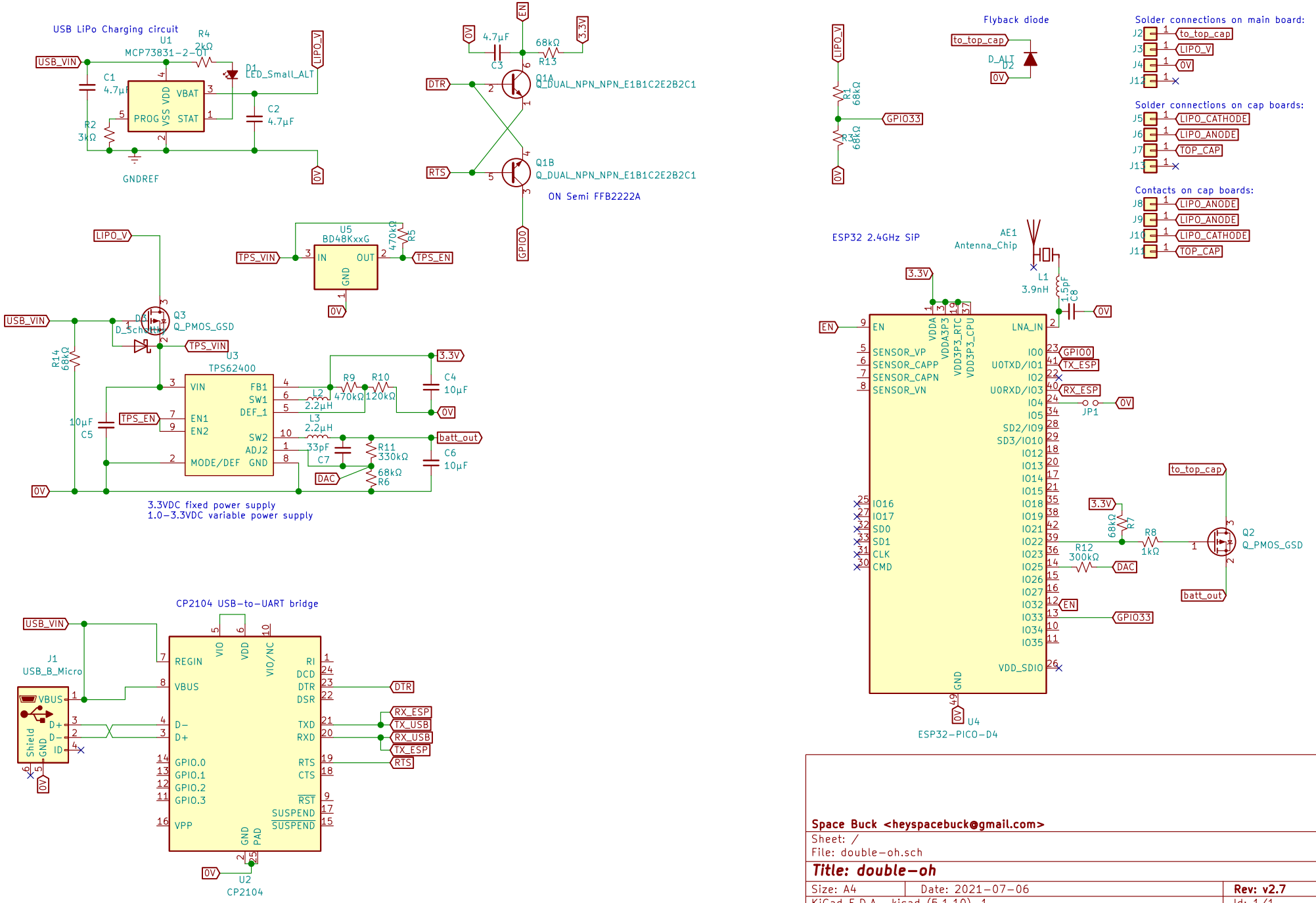

Space Buck <heyspacebuck@gmail.com>

Sheet: /

File: double-oh.sch

Title: double-oh

Size: A4	Date: 2021-07-06	**Rev: v2.7**
KiCad E.D.A. kicad (5.1.10)-1		Id: 1/1