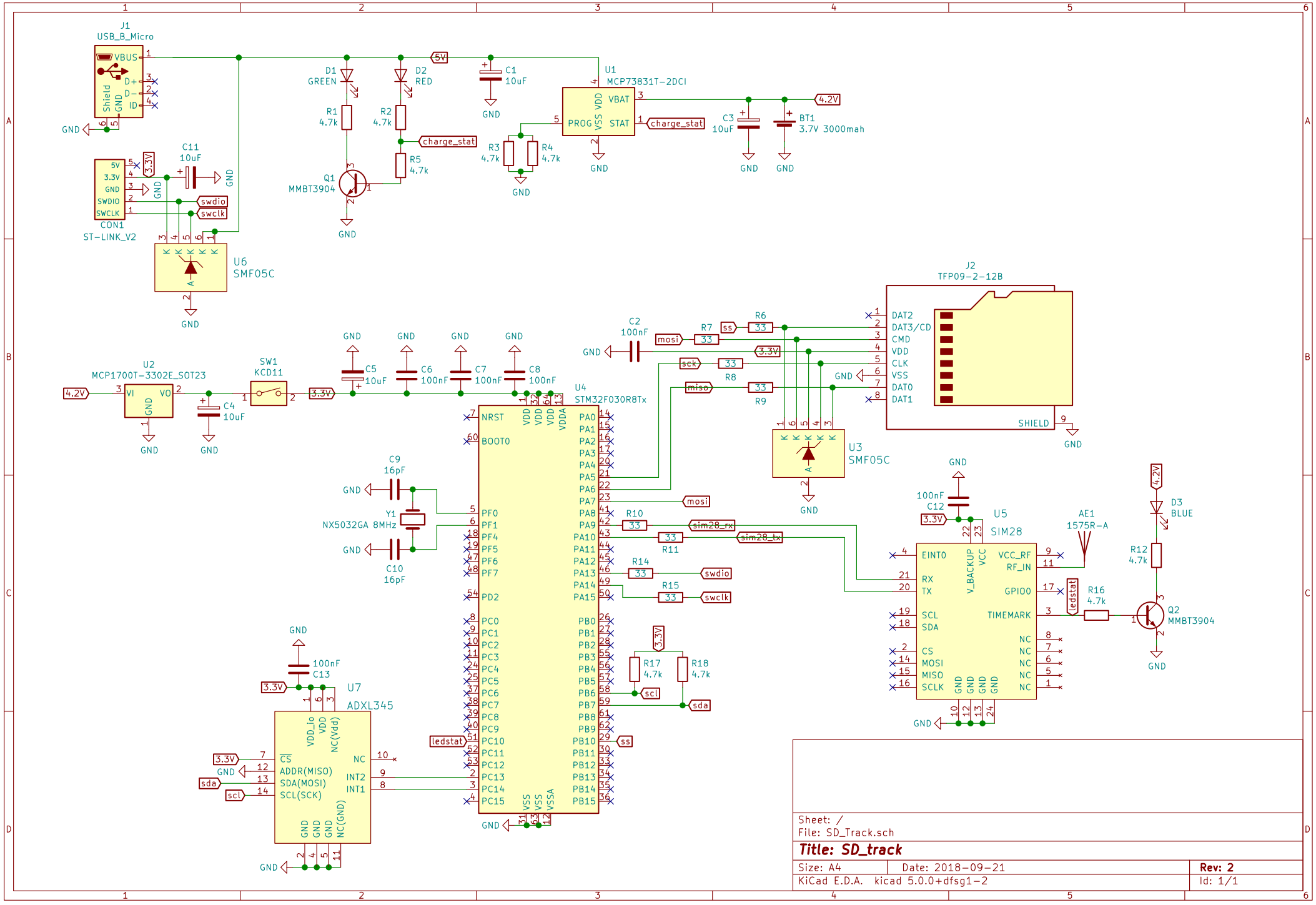


Sheet: /
File: SD_Track.sch

**Title: SD_track**

| | | |
|---|---|---|
| Size: A4 | Date: 2018-09-21 | Rev: 2 |
| KiCad E.D.A. kicad 5.0.0+dfsg1-2 | | Id: 1/1 |