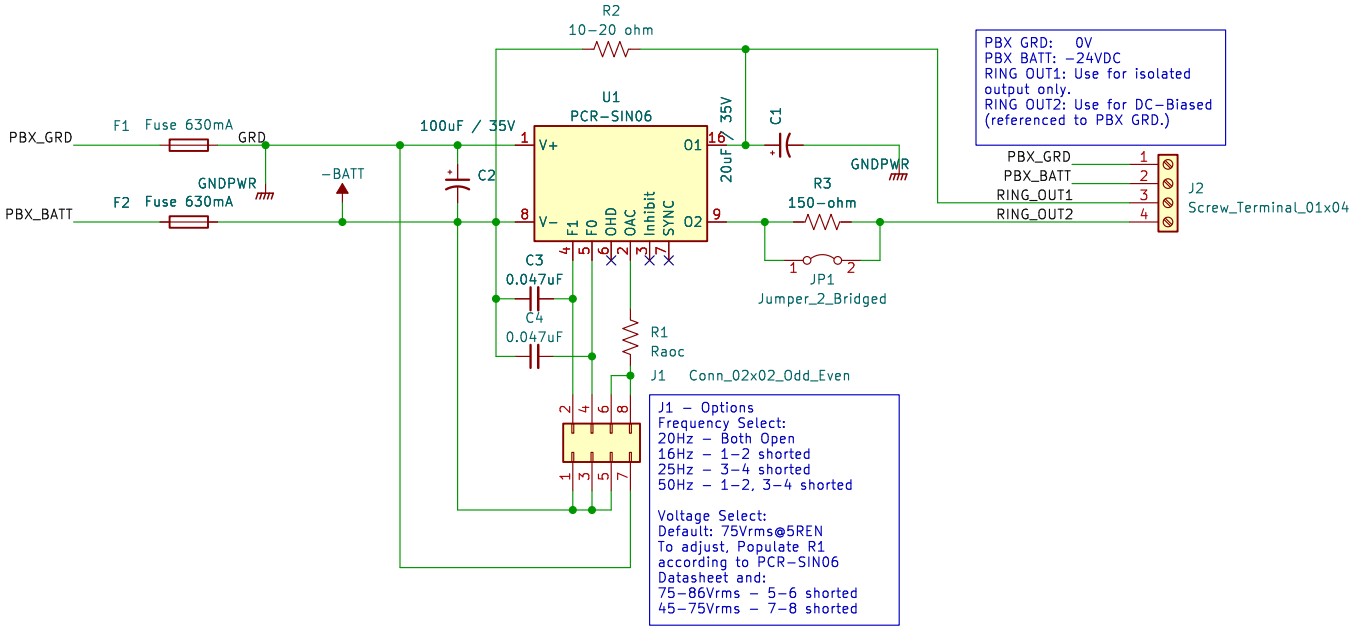

H1 MountingHole
H2 MountingHole
H3 MountingHole
H4 MountingHole

https://github.com/hharte/pbx_ring_gen

Howard M. Harte

Sheet: /
File: pbx_ring_gen.kicad_sch

Title: PBX Ring Generator

Size: A	Date: 2023-06-17	**Rev: 2**
KiCad E.D.A. kicad 7.0.5		Id: 1/1