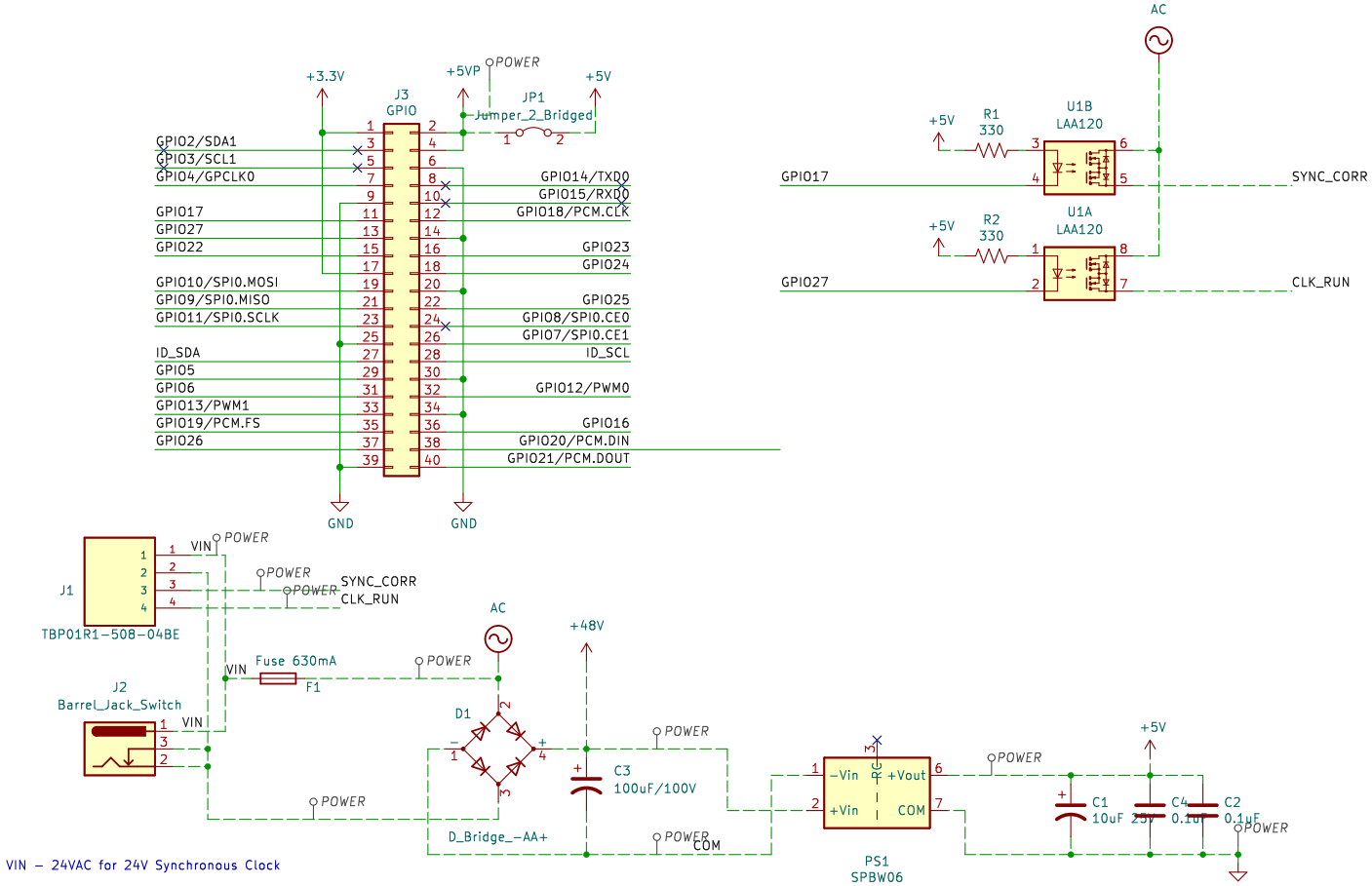

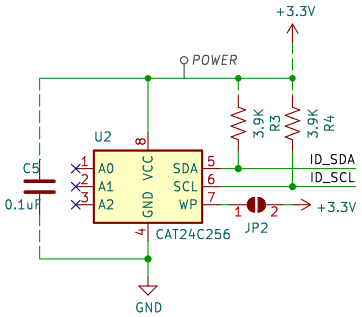

ID_SD and ID_SC PINS:
These pins are reserved for HAT ID EEPROM.

At boot time this I2C interface will be interrogated to look for an EEPROM that identifies the attached board and allows automagic setup of the GPIOs (and optionally, Linux drivers).

Bridging JP1 enables write protection.

DO NOT USE these pins for anything other than attaching an I2C ID EEPROM. Leave unconnected if ID EEPROM not required.

https://github.com/hharte/rpi-simplex-clock-hat

Sheet: /
File: rpi-simplex-clock-hat.kicad_sch

Title: RPi Simplex Clock Hat

Size: A4	Date: 2024-02-03	Rev: 0
KiCad E.D.A. kicad 7.0.10		Id: 1/1