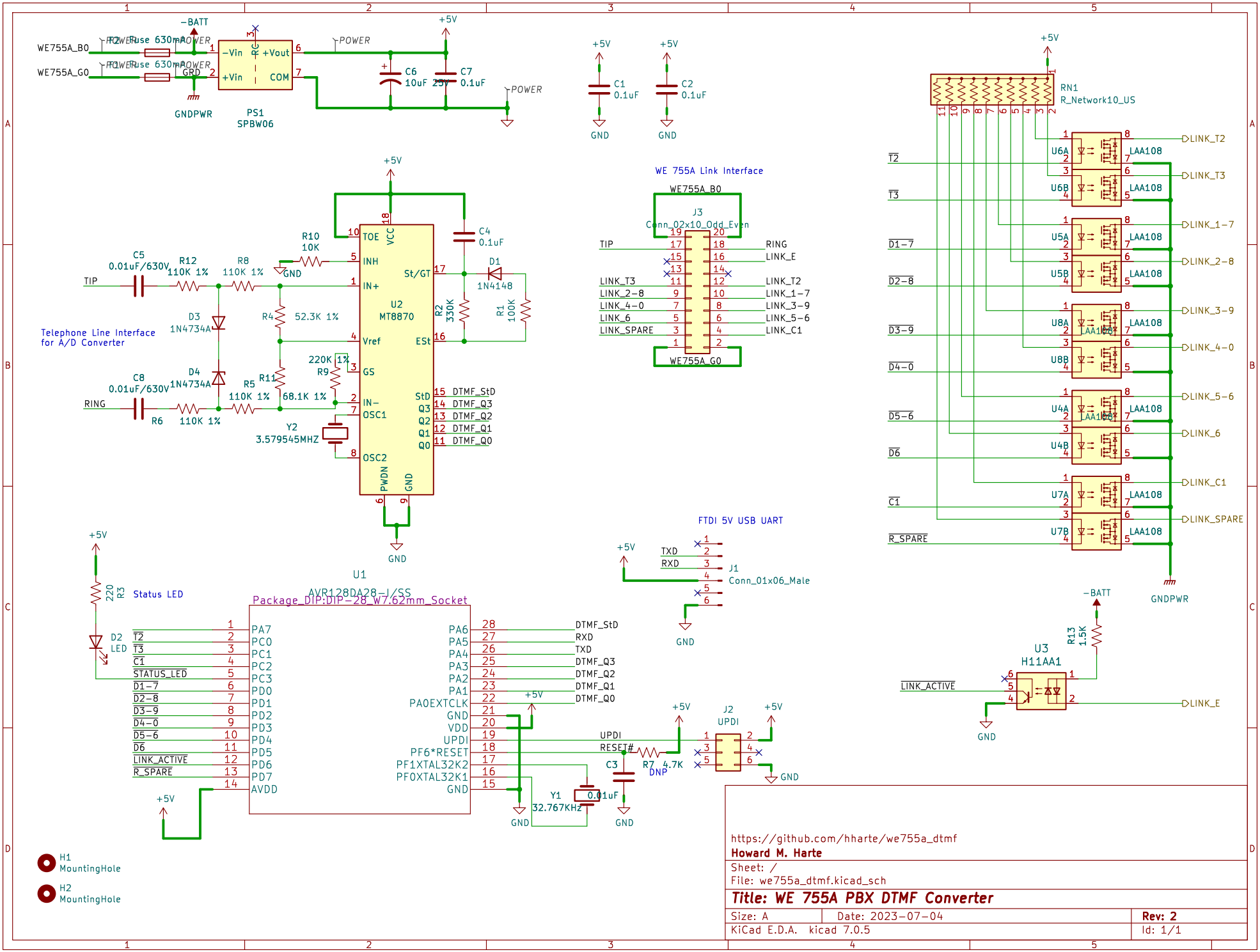

https://github.com/hharte/we755a_dtmf

Howard M. Harte

Sheet: /

File: we755a_dtmf.kicad_sch

Title: WE 755A PBX DTMF Converter

Size: A	Date: 2023-07-04	**Rev: 2**
KiCad E.D.A. kicad 7.0.5		Id: 1/1