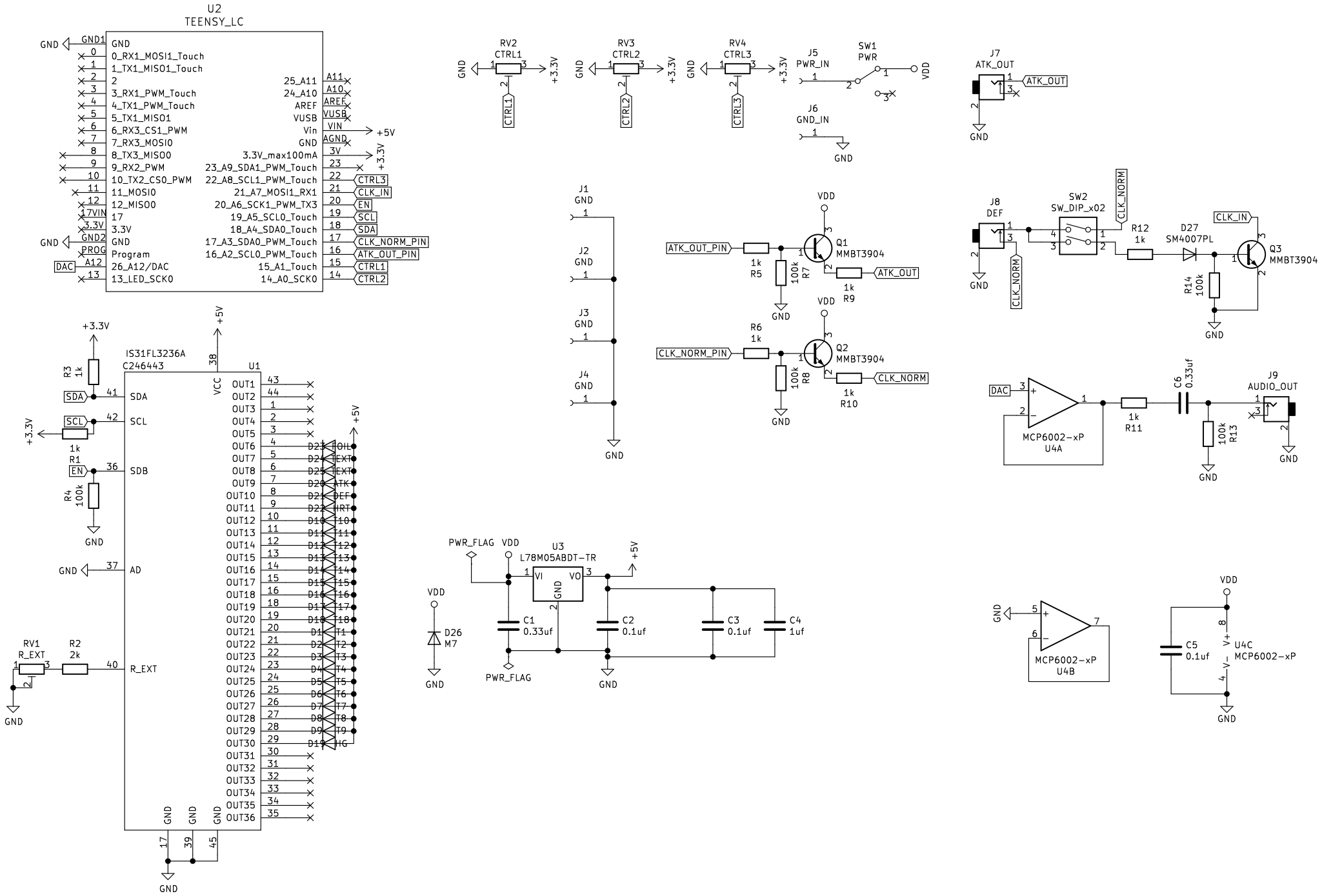
U2
TEENSY_LC
GND1 GND
0 0_RX1_MOSI1_Touch
1 1_TX1_MISO1_Touch
2 2
3 3_RX1_PWM_Touch
4 4_TX1_PWM_Touch
5 5_TX1_MISO1
6 6_RX3_CS1_PWM
7 7_RX3_MOSI0
8 8_TX3_MISO0
9 9_RX2_PWM
10 10_TX2_CS0_PWM
11 11_MOSI0
12 12_MISO0
17VIN 17
3.3V 3.3V
GND2 GND
PROG Program
DAC A12 26_A12/DAC
13 13_LED_SCK0
25_A11 A11
24_A10 A10
AREF AREF
VUSB VUSB
Vin VIN +5V
GND AGND
3.3V_max100mA 3V +3.3V
23_A9_SDA1_PWM_Touch 23
22_A8_SCL1_PWM_Touch 22 CTRL3
21_A7_MOSI1_RX1 21 CLK_IN
20_A6_SCK1_PWM_TX3 20 EN
19_A5_SCL0_Touch 19 SCL
18_A4_SDA0_Touch 18 SDA
17_A3_SDA0_PWM_Touch 17 CLK_NORM_PIN
16_A2_SCL0_PWM_Touch 16 ATK_OUT_PIN
15_A1_Touch 15 CTRL1
14_A0_SCK0 14 CTRL2
RV2 CTRL1
RV3 CTRL2
RV4 CTRL3
J5 PWR_IN
SW1 PWR
J6 GND_IN
J7 ATK_OUT
J1 GND
J2 GND
J3 GND
J4 GND
VDD
Q1 MMBT3904
Q2 MMBT3904
ATK_OUT_PIN
CLK_NORM_PIN
R5 1k
R7 100k
R9 1k
R6 1k
R8 100k
R10 1k
J8 DEF
SW2 SW_DIP_x02
CLK_NORM
R12 1k
D27 SM4007PL
R14 100k
Q3 MMBT3904
CLK_IN
DAC
MCP6002-xP U4A
R11 1k
C6 0.33uf
R13 100k
J9 AUDIO_OUT
IS31FL3236A
C246443
U1
+3.3V
+5V
R3 1k
SDA 41 SDA
SCL 42 SCL
R1 1k
EN 36 SDB
R4 100k
37 AD
RV1 R_EXT
R2 2k
40 R_EXT
VCC 38
OUT1 43 D23 HOIL
OUT2 44 D24 TEXT
OUT3 1 D25 TEXT
OUT4 2 D20 ATK
OUT5 3 D21 DEF
OUT6 4 D22 HRT
OUT7 5 D10 T10
OUT8 6 D11 T11
OUT9 7 D12 T12
OUT10 8 D13 T13
OUT11 9 D14 T14
OUT12 10 D15 T15
OUT13 11 D16 T16
OUT14 12 D17 T17
OUT15 13 D18 T18
OUT16 14 D1 T1
OUT17 15 D2 T2
OUT18 16 D3 T3
OUT19 17 D4 T4
OUT20 18 D5 T5
OUT21 19 D6 T6
OUT22 20 D7 T7
OUT23 21 D8 T8
OUT24 22 D9 T9
OUT25 23 D19 HG
OUT26 24
OUT27 25
OUT28 26
OUT29 27
OUT30 28
OUT31 29
OUT32 30
OUT33 31
OUT34 32
OUT35 33
OUT36 34
35
GND 17
GND 39
GND 45
PWR_FLAG
U3 L78M05ABDT-TR
VI VO GND
C1 0.33uf
C2 0.1uf
C3 0.1uf
C4 1uf
D26 M7
MCP6002-xP U4B
C5 0.1uf
U4C MCP6002-xP
V+ 8
V- 4