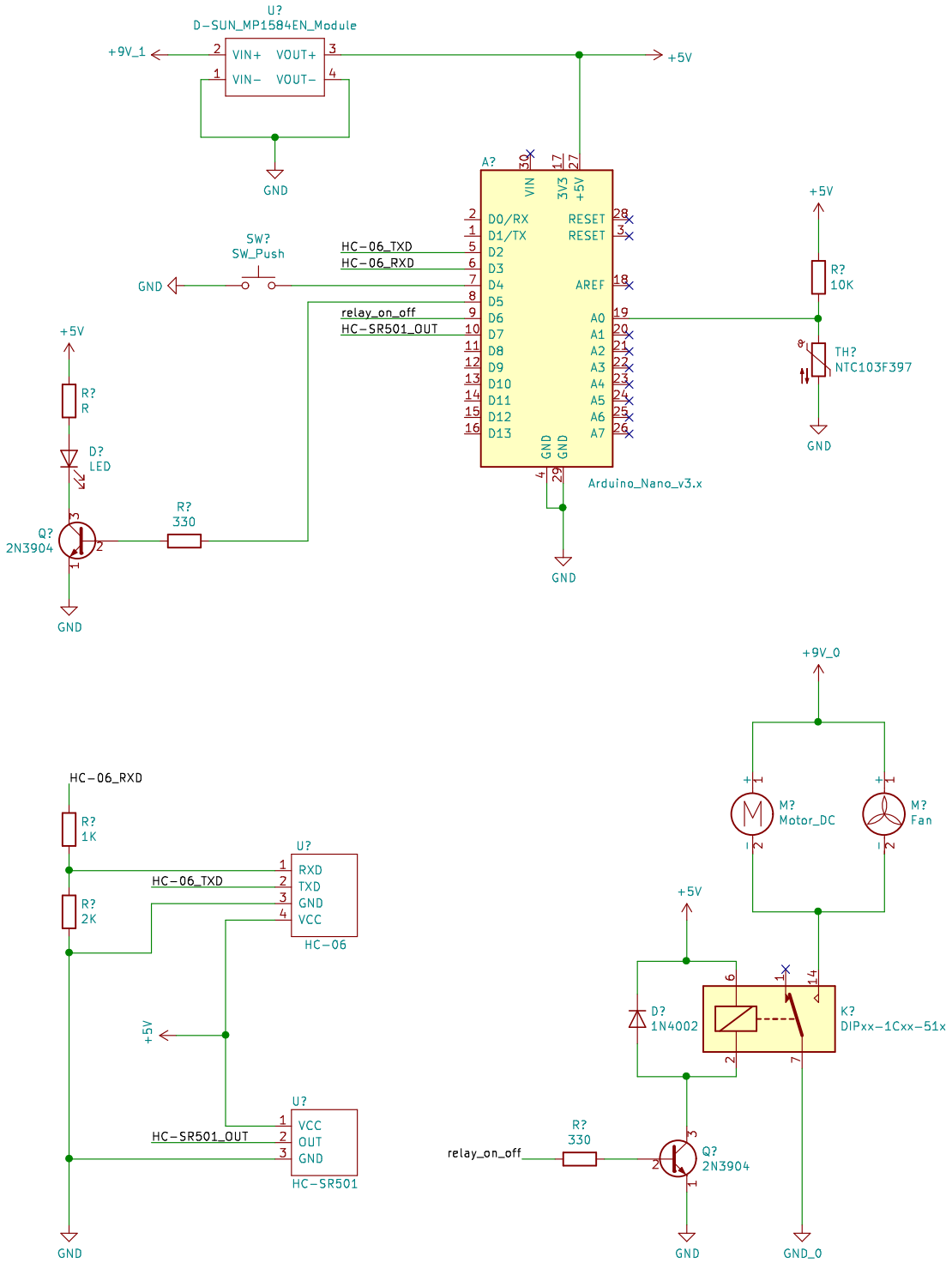

H-brothers

Sheet: /

File: water_air_cooling_fan.sch

Title: water_air_cooling_fan

Size: A4	Date:	Rev:
KiCad E.D.A. eeschema 5.0.0-fee4fd166ubuntu18.04.1		Id: 1/1