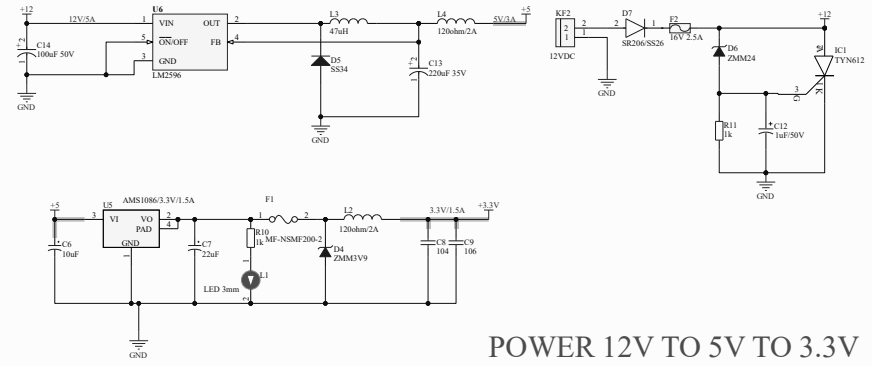

POWER 12V TO 5V TO 3.3V

DS1307

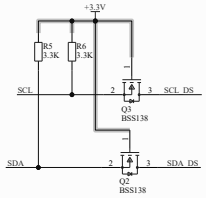

DS1307

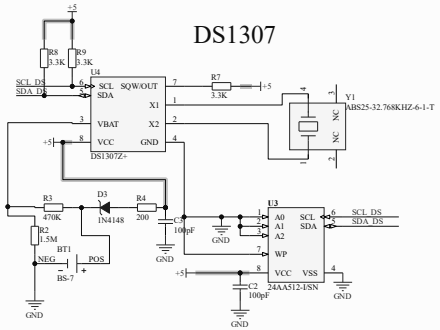

MCU

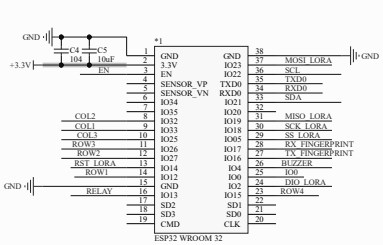

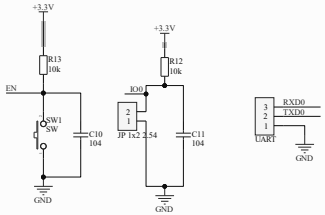

OUTPUT

BUZZER

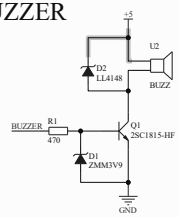

RELAY

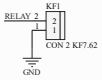

LORA

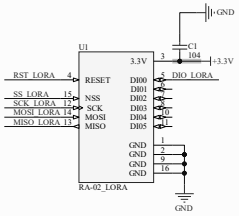

INPUT

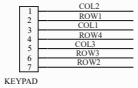

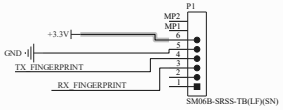

Title: Fingerprint		
Size: A2	Number: 1	Revision: 2.0
Date: 12/04/2022	Sheet of	
File: C:\Users\...\schematicFingerprint.SchDoc	Drawn By:	