# 逆运动学分析和装配图

侯红日PB19050979

2022.11.20

# 逆运动学分析

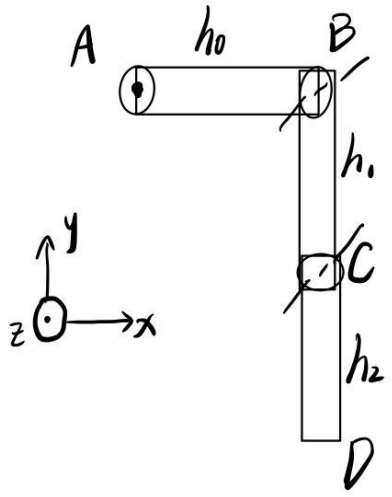


$$\begin{pmatrix}\alpha\\ \beta\\ \gamma\end{pmatrix}=\begin{pmatrix}D_{11} & D_{12} & D_{13}\\ D_{21} & D_{22} & D_{23}\\ D_{31} & D_{32} & D_{33}\end{pmatrix}\begin{pmatrix}x_D\\ y_D\\ z_D\end{pmatrix}$$

BCD共面且投影为一条直线

控制$\alpha$使得直线经过D点的投影$(x_D, y_D, 0)$

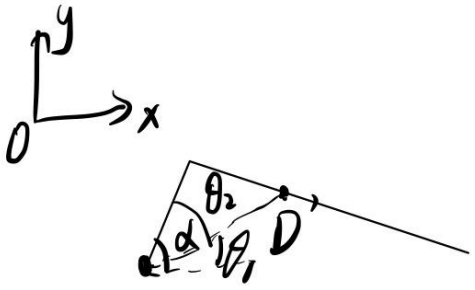


$$\theta_1=\arctan\frac{y_D}{x_D},\quad \theta_2=\arccos\frac{h_0}{\sqrt{x_D^2+y_D^2}}$$

$$\alpha=\theta_1+\theta_2$$

# 逆运动学分析

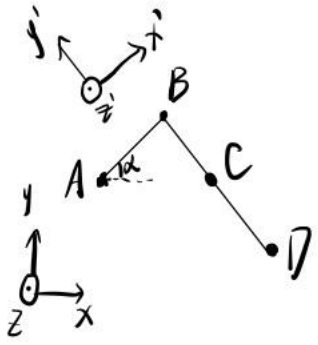


B: $\begin{pmatrix} x_B \\ y_B \\ z_B \end{pmatrix} = \begin{pmatrix} h_0\cos\alpha \\ h_0\sin\alpha \\ 0 \end{pmatrix}$

对于 $x'y'z'$ 坐标系 → $xyz$ 坐标系的变换

$$\begin{pmatrix} x \\ y \\ z \end{pmatrix} = \begin{pmatrix} \cos\alpha & -\sin\alpha & 0 \\ \sin\alpha & \cos\alpha & 0 \\ 0 & 0 & 1 \end{pmatrix} \begin{pmatrix} x' \\ y' \\ z' \end{pmatrix} + \begin{pmatrix} x_B \\ y_B \\ z_B \end{pmatrix}$$

逆变换

$$\begin{pmatrix} x' \\ y' \\ z' \end{pmatrix} = \begin{pmatrix} \cos\alpha & \sin\alpha & 0 \\ -\sin\alpha & \cos\alpha & 0 \\ 0 & 0 & 1 \end{pmatrix} \begin{pmatrix} x - x_B \\ y - y_B \\ z - z_B \end{pmatrix}$$

D在 $Ox'y'z'$ 下的坐标为 $(x_D', y_D', z_D')$

$$\begin{pmatrix} x_D' \\ y_D' \\ z_D' \end{pmatrix} = \begin{pmatrix} x\cos\alpha - h_0 + y\sin\alpha \\ y\cos\alpha - x\sin\alpha \\ z \end{pmatrix}$$

# 逆运动学分析

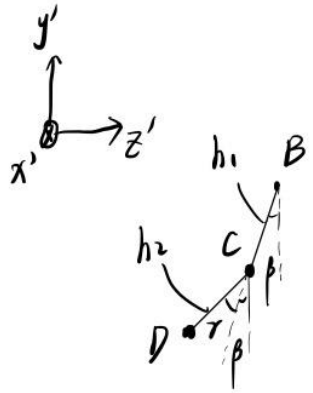


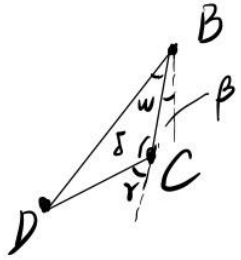


$$
\begin{cases}
\gamma = 180^\circ - \delta \\
\delta = \arccos \dfrac{h_1^2 + h_2^2 - (y_D'^2 + z_D'^2)}{2h_1h_2} \\
w = \arccos \dfrac{h_1^2 + (y_D'^2 + z_D'^2) - h_2^2}{2h_1 \cdot \sqrt{y_D'^2 + z_D'^2}} \\
\beta + w = \arctan \dfrac{z_D'}{y_D'}
\end{cases}
$$

$$
\Rightarrow \begin{cases}
\beta = \arctan \dfrac{z_D'}{y_D'} - \arccos \dfrac{h_1^2 + (y_D'^2 + z_D'^2) - h_2^2}{2h_1 \cdot \sqrt{y_D'^2 + z_D'^2}} \\
\gamma = 180^\circ - \arccos \dfrac{h_1^2 + h_2^2 - (y_D'^2 + z_D'^2)}{2h_1h_2}
\end{cases}
$$

综上进行代入求得，

$$
\begin{cases}
\alpha = \arctan \dfrac{y_D}{x_D} + \arccos \dfrac{h_0}{\sqrt{x_D^2 + y_D^2}} \\
\beta = \arctan \dfrac{z}{y\cos\alpha - x\sin\alpha} - \arccos\left( \dfrac{(y\cos\alpha - x\sin\alpha)^2 + h_1^2 - h_2^2 + z^2}{2h_1\sqrt{(y\cos\alpha - x\sin\alpha)^2 + z^2}} \right) \\
\gamma = \arccos \dfrac{(y\cos\alpha - x\sin\alpha)^2 - h_1^2 - h_2^2 + z^2}{2h_1h_2}
\end{cases}
$$

# 运动学代码实现

用Matlab实现逆运动学的输入坐标，输出角度的功能

```
%Define the constant variables
H0=100;
H1=100;
H2=100;

%Calculate
while(1)
    % input the axises of D
    x = input("please input the x: \n");
    y = input("please input the y:\n");
    z = input("please input the z:\n");

    %Check the feasibility
    if( (x^2+y^2)<H0^2 )
        fprintf("Error! Out of Reach!\n\n");
        continue;

    yd = y*cos(a)-x*sin(a);
    zd = z;
    if( sqrt(yd^2+zd^2)>(H1+H2))
        fprintf("Error! Out of Reach!\n\n");
        continue;
    end

    % Calculate the angles for D
    a = rad2deg(atan(y/x)+acos(H0/sqrt(x^2+y^2)));
    b = rad2deg(atan(z/(y*cos(a)-x*sin(a)))-acos(((y*cos(a)-x*sin(a))^2+H1^2-H2^2+z^2)/...
        (2*H1*sqrt((y*cos(a)-x*sin(a))^2+z^2))));
    c = rad2deg(acos(((y*cos(a)-x*sin(a))^2-H1^2-H2^2+z^2)/(2*H1*H2)));
    fprintf("the alpha is %.2g \n",a);
    fprintf("the beta is %.2g \n",b);
    fprintf("the gamma is %.2g \n\n",c);
end
```

```
please input the x:
100
please input the y:
-200
please input the z:
0
the alpha is 0
the beta is -0
the gamma is 0

please input the x:
25
please input the y:
125
please input the z:
25
the alpha is 1.2e+02
the beta is -87
the gamma is 1.4e+02

please input the x:
100
please input the y:
-225
please input the z:
0
Error! Out of Reach!
```

# 工作空间分析

在分析逆运动学的角度时存在超出可达范围的点，直接按照公式计算可能存在问题；
进一步分析其工作空间，还可引入工作角度的限制范围；

```
% Define some variables
H0 = 1;
H1 = 1;
H2 = 1;

% Loop to find out the workspace
for x=0:0.1:H0
    for y=0:0.1:H1+H2
        for z=0:0.1:H1+H2
            %Check the feasibility
            a = rad2deg(atan(y/x)+acos(H0/sqrt(x^2+y^2)));
            yd = y*cos(a)-x*sin(a);
            zd = z;

            if( (x^2+y^2)<H0^2 || sqrt(yd^2+zd^2)>(H1+H2))
                fprintf("%.2g %.2g %.2g is out of Reach!\n",x, y, z);
                continue;
            end
            scatter3(x,y,z);
            hold on;
        end
    end
end
```

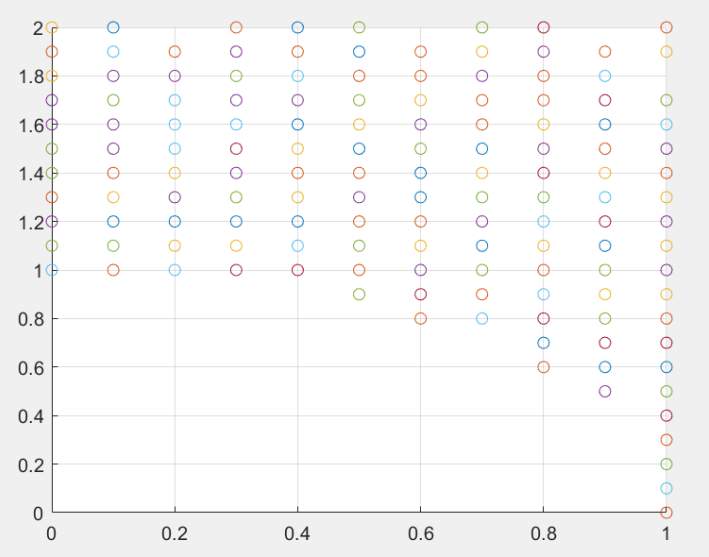


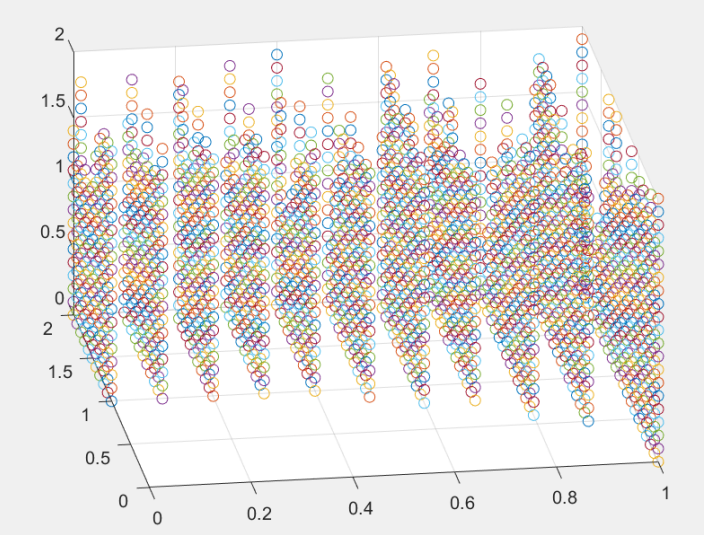

# 装配图

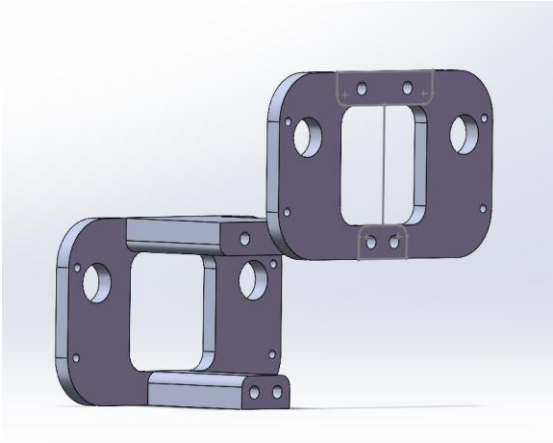

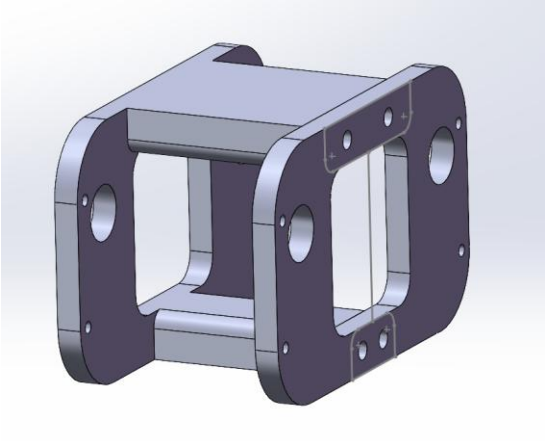

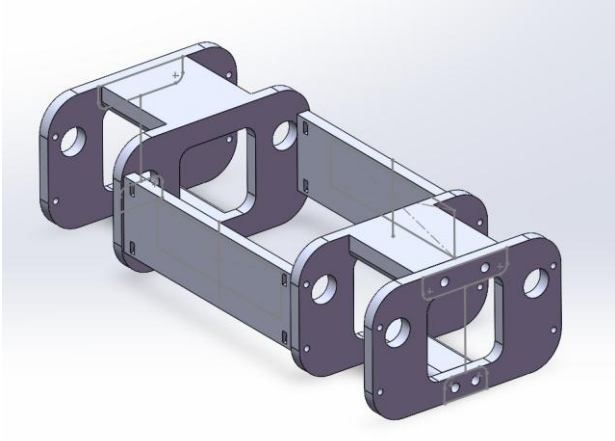

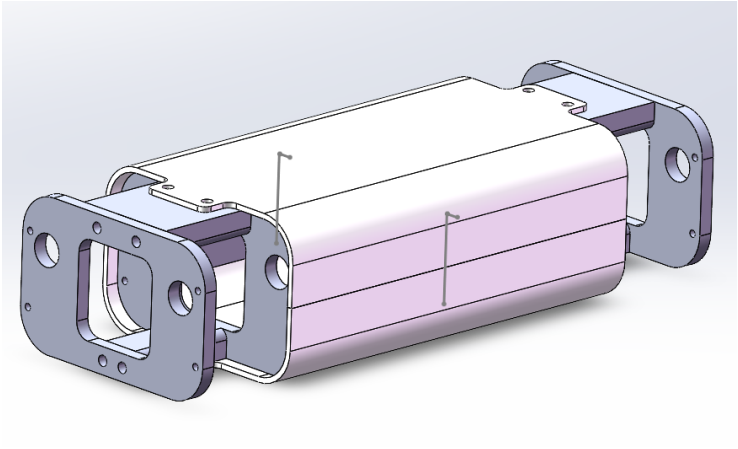

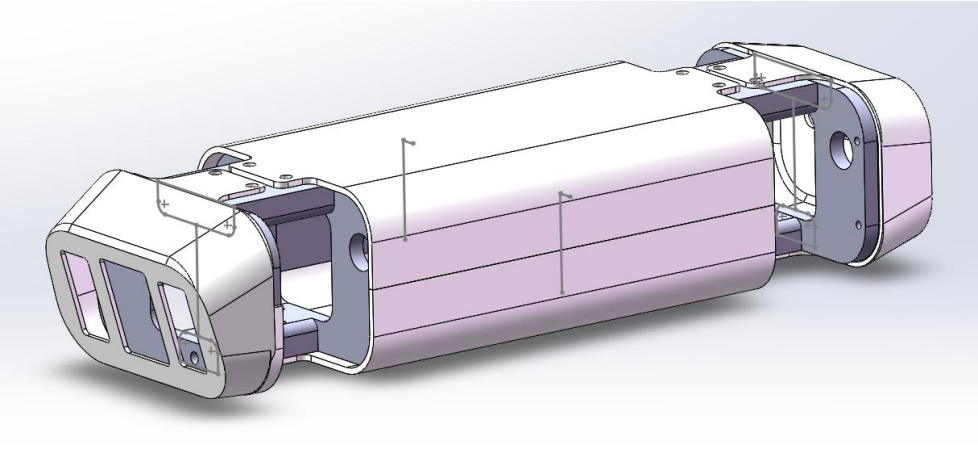

# 装配图

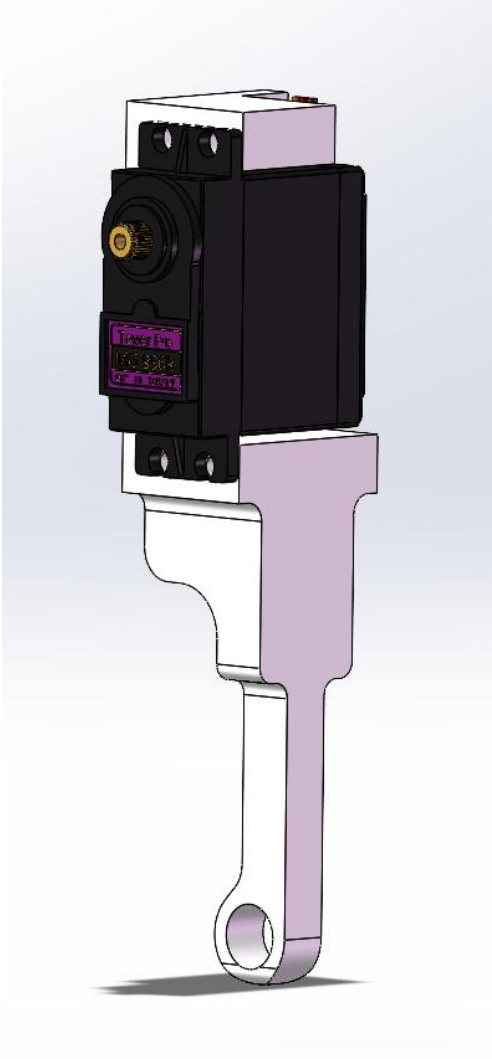

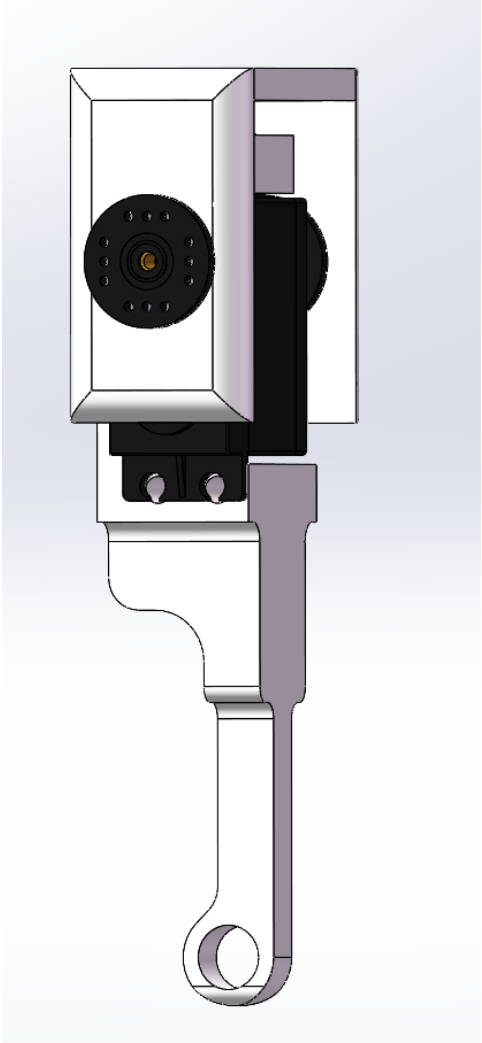

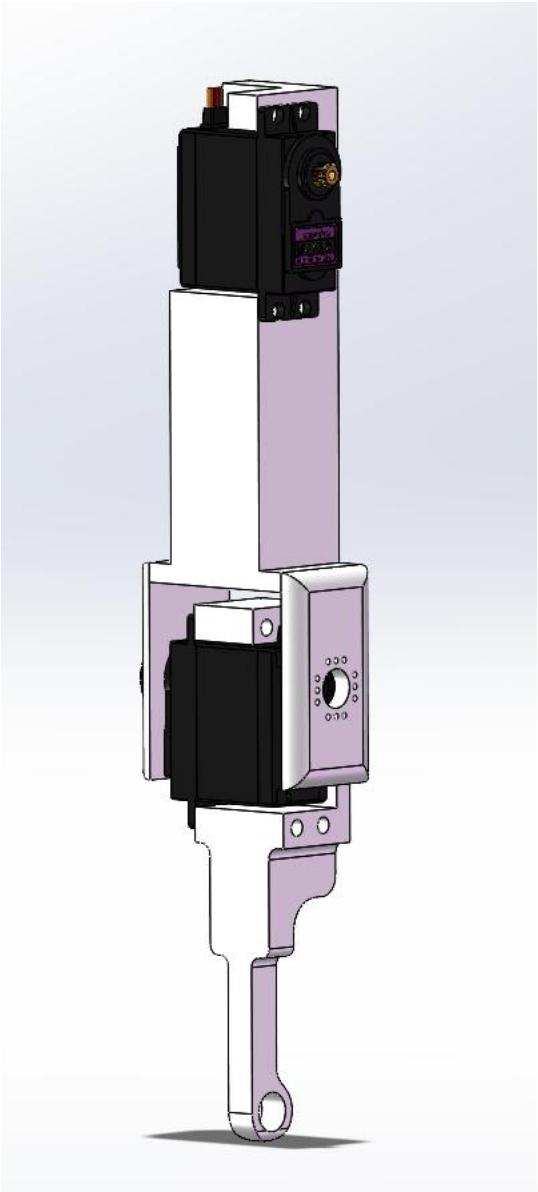

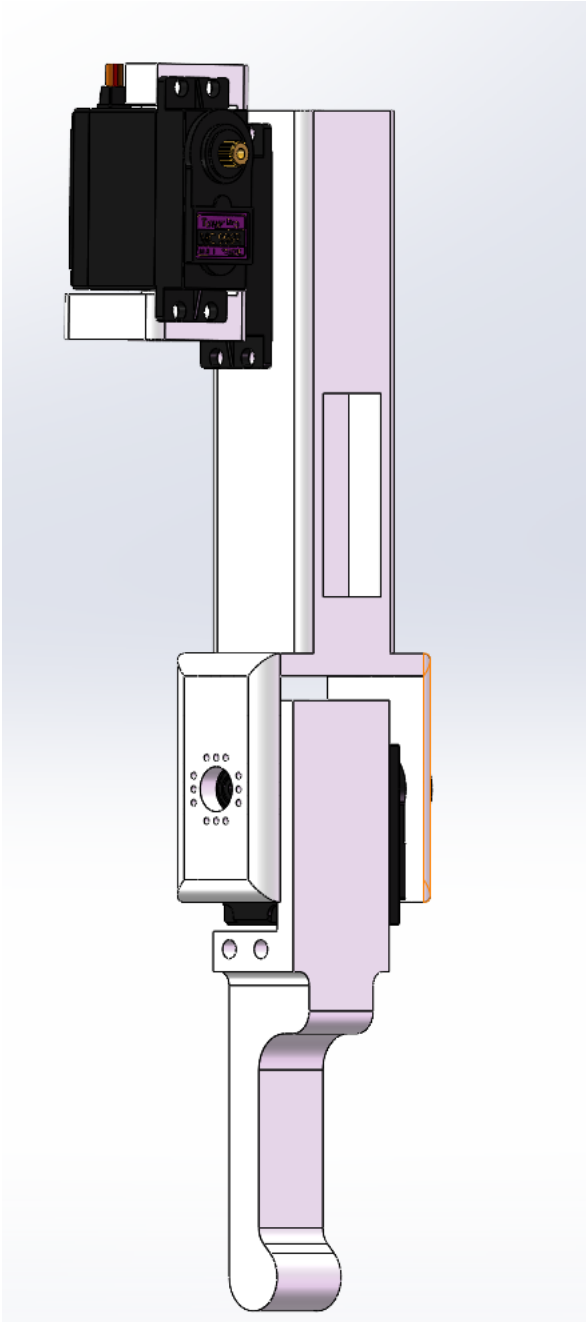

# 装配图

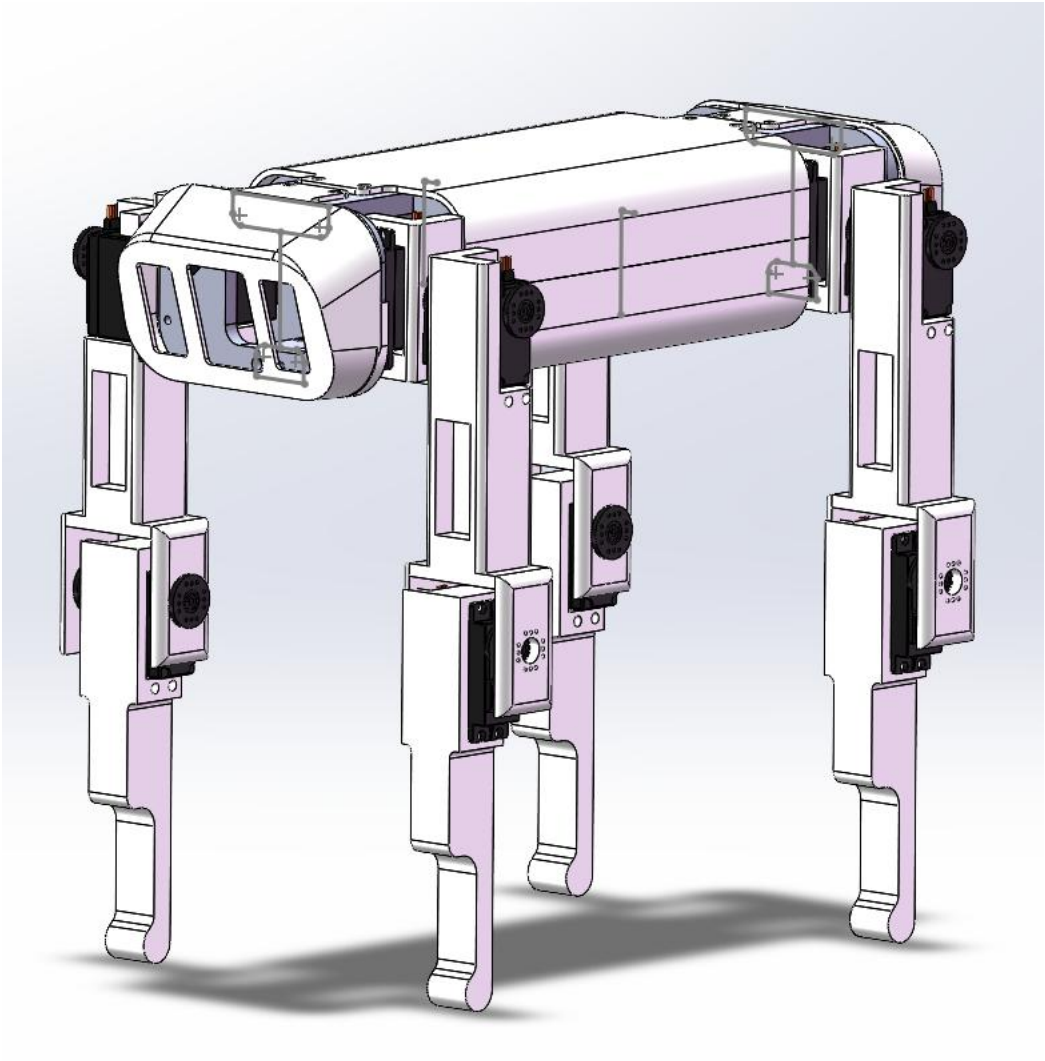

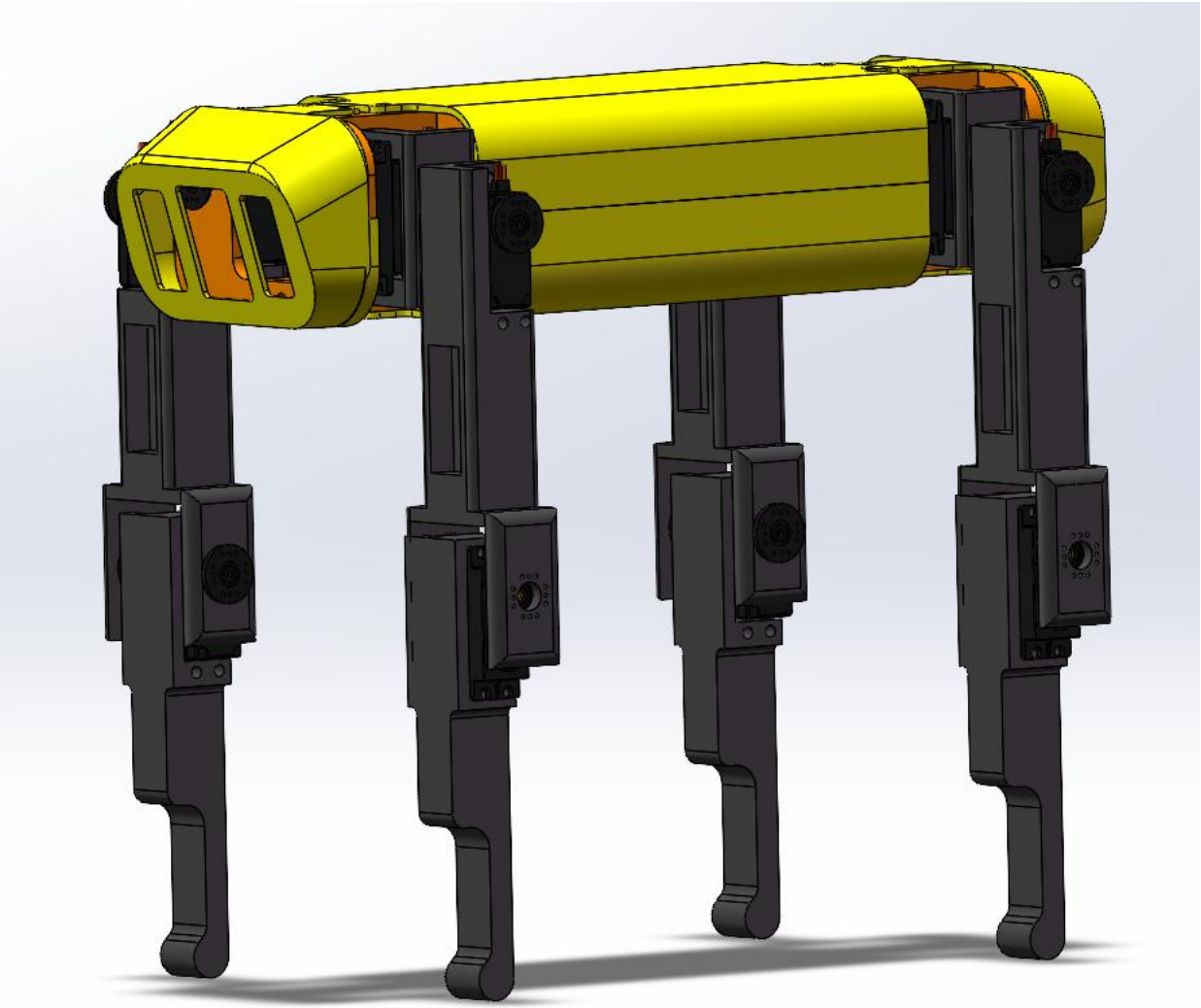

# 装配图

# 后期工作

1. 进一步细化建模的模型，完善装配图的相关标注；

2. 进行Simulink的姿态分析；

3. 进行零件的工艺设计，编写工艺卡片；