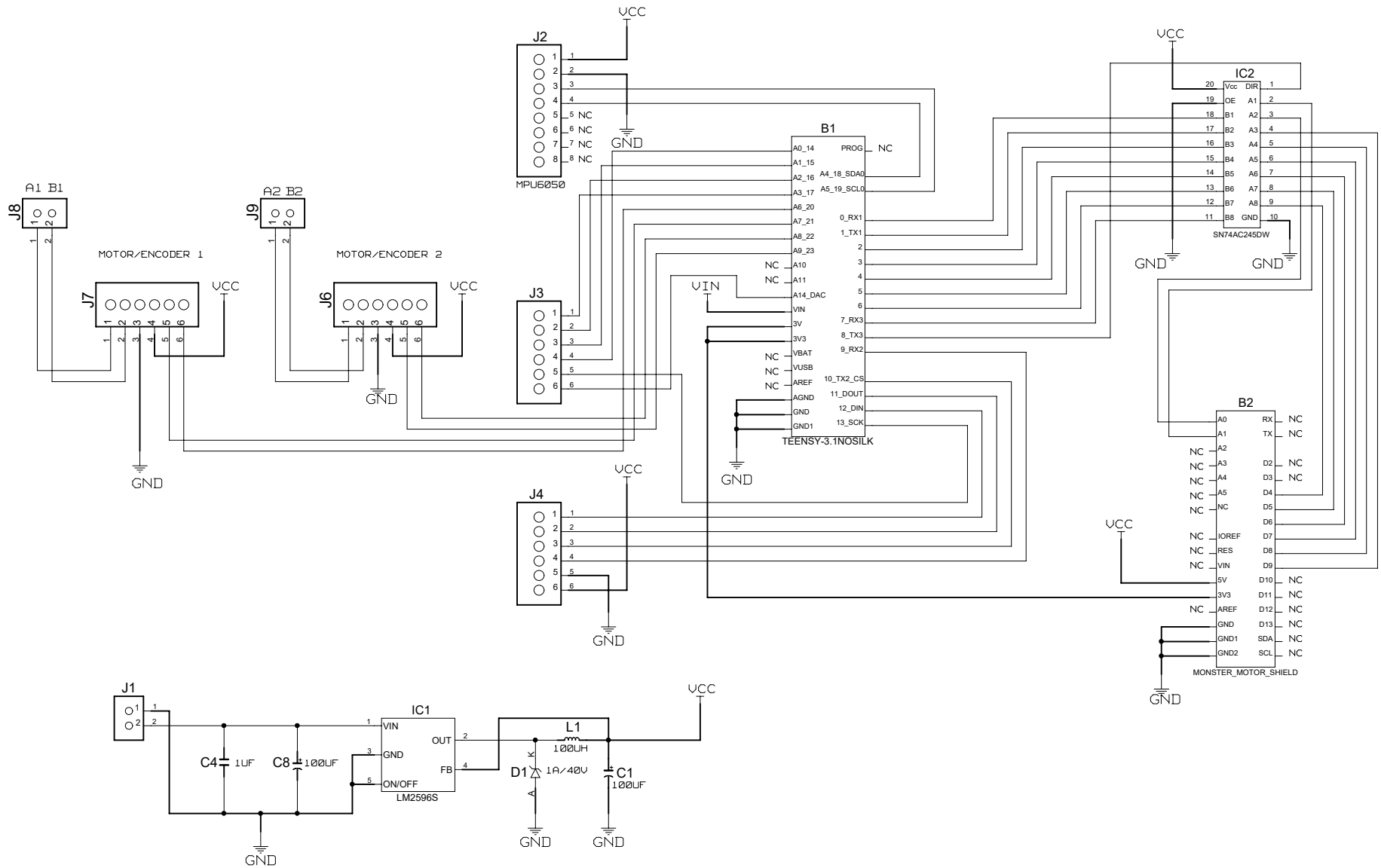TITLE.	DAUGHTER BOARD V0.9
REV. NO.	
PAGE	
SCHEMATIC	
REMARKS: