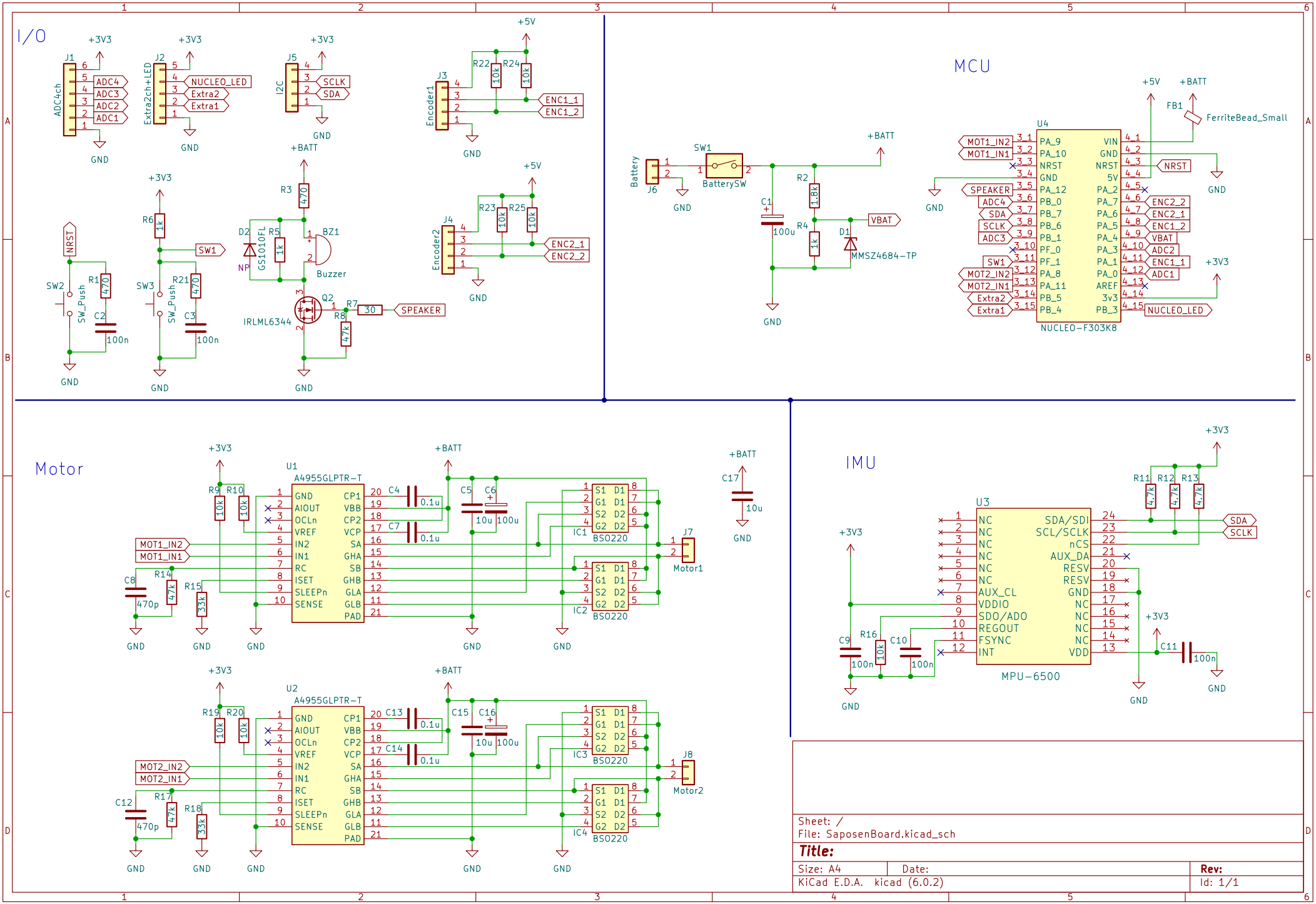
I/O
J1
ADC4ch
ADC4
ADC3
ADC2
ADC1
J2
Extra2ch+LED
NUCLEO_LED
Extra2
Extra1
J5
I2C
SCLK
SDA
J3
Encoder1
ENC1_1
ENC1_2
R22
R24
10k
+3V3
+5V
GND
NRST
SW2
SW_Push
R1
470
C2
100n
SW3
R21
C3
R6
1k
SW1
+BATT
R3
D2
GS1010FL
R5
NP
BZ1
Buzzer
Q2
IRLML6344
R7
30
SPEAKER
R8
47k
J4
Encoder2
ENC2_1
ENC2_2
R23
R25
MCU
Battery
J6
SW1
BatterySW
C1
100u
R2
1.8k
R4
VBAT
D1
MMSZ4684-TP
FB1
FerriteBead_Small
U4
NUCLEO-F303K8
MOT1_IN2
MOT1_IN1
SPEAKER
ADC4
SDA
SCLK
ADC3
SW1
MOT2_IN2
MOT2_IN1
Extra2
Extra1
PA_9
PA_10
NRST
GND
PA_12
PB_0
PB_7
PB_6
PB_1
PF_0
PF_1
PA_8
PA_11
PB_5
PB_4
VIN
5V
PA_2
PA_7
PA_6
PA_5
PA_4
PA_3
PA_1
PA_0
AREF
3v3
PB_3
ENC2_2
ENC2_1
ENC1_2
ADC2
ENC1_1
ADC1
Motor
U1
A4955GLPTR-T
GND
AIOUT
OCLn
VREF
IN2
IN1
RC
ISET
SLEEPn
SENSE
CP1
VBB
CP2
VCP
SA
GHA
SB
GHB
GLA
GLB
PAD
C4
C7
0.1u
C5
C6
10u
100u
R9
R10
R14
R15
C8
470p
33k
IC1
IC2
BSO220
J7
Motor1
C17
U2
R19
R20
R17
R18
C12
C13
C14
C15
C16
IC3
IC4
J8
Motor2
IMU
U3
MPU-6500
NC
AUX_CL
VDDIO
SDO/ADO
REGOUT
FSYNC
INT
SDA/SDI
SCL/SCLK
nCS
AUX_DA
RESV
VDD
R11
R12
R13
4.7k
R16
C9
C10
C11
Sheet: /
File: SaposenBoard.kicad_sch
Title:
Size: A4
Date:
Rev:
KiCad E.D.A. kicad (6.0.2)
Id: 1/1