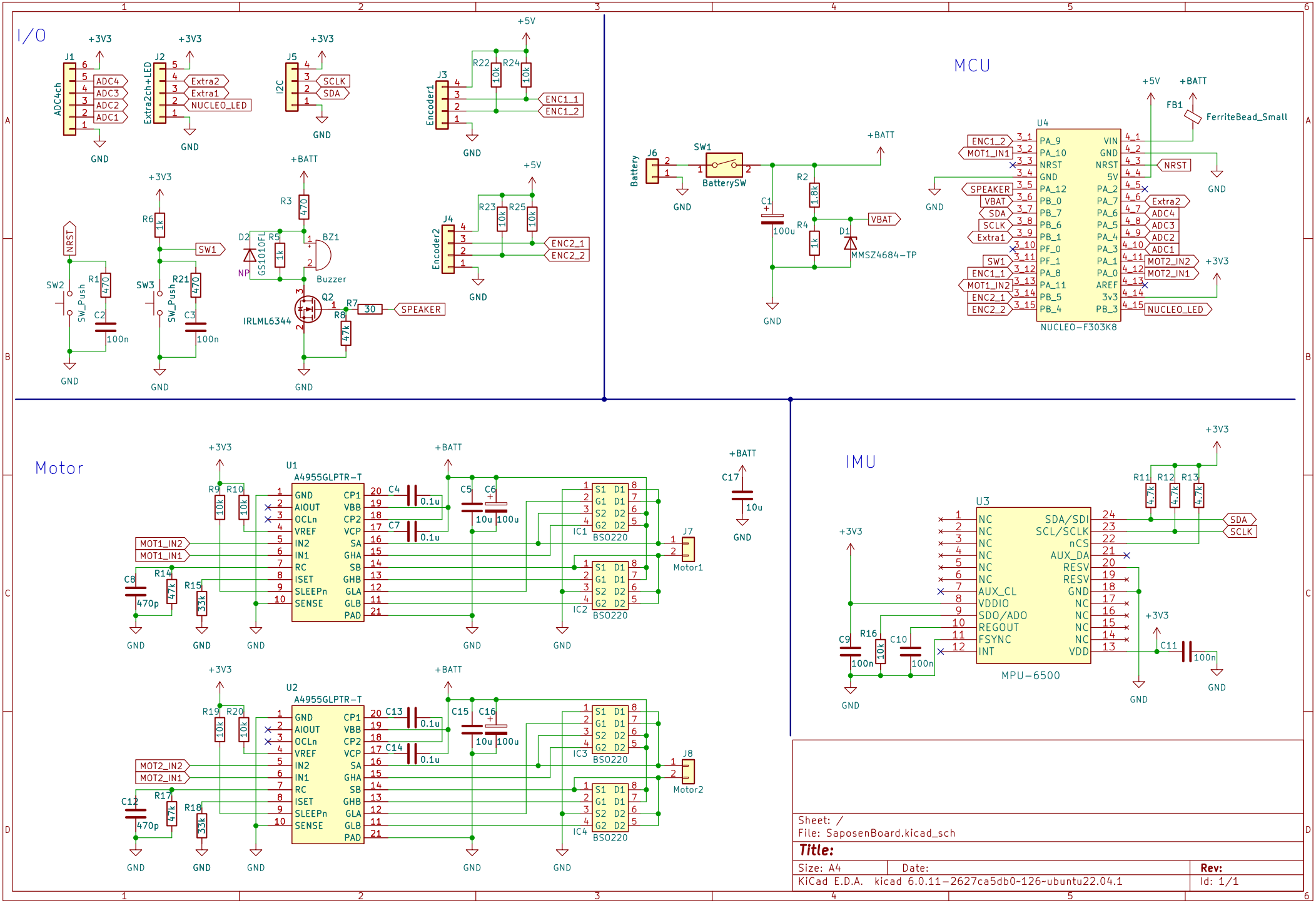
I/O
MCU
Motor
IMU
J1
ADC4ch
ADC4
ADC3
ADC2
ADC1
J2
Extra2ch+LED
Extra2
Extra1
NUCLEO_LED
J5
I2C
SCLK
SDA
J3
Encoder1
ENC1_1
ENC1_2
J4
Encoder2
ENC2_1
ENC2_2
NRST
SW1
SW2
SW3
SW_Push
R1 470
R6 1k
R21 470
C2 100n
C3 100n
D2
GS1010FL
NP
R5 1k
R3 470
BZ1
Buzzer
Q2
IRLML6344
R7 30
R8 47k
SPEAKER
R22 10k
R24 10k
R23 10k
R25 10k
J6
Battery
BatterySW
C1 100u
R2 1.8k
R4 1k
D1
MMSZ4684-TP
VBAT
U4
NUCLEO-F303K8
PA_9
PA_10
NRST
GND
PA_12
PB_0
PB_7
PB_6
PB_1
PF_0
PF_1
PA_8
PA_11
PB_5
PB_4
VIN
5V
PA_2
PA_7
PA_6
PA_5
PA_4
PA_3
PA_1
PA_0
AREF
3v3
PB_3
MOT1_IN1
MOT1_IN2
MOT2_IN2
MOT2_IN1
FB1
FerriteBead_Small
U1
A4955GLPTR-T
GND
AIOUT
OCLn
VREF
IN2
IN1
RC
ISET
SLEEPn
SENSE
CP1
VBB
CP2
VCP
SA
GHA
SB
GHB
GLA
GLB
PAD
C4 0.1u
C7 0.1u
C5 10u
C6 100u
R9 10k
R10 10k
R14 47k
R15 33k
C8 470p
IC1
IC2
BSO220
S1 D1
G1 D1
S2 D2
G2 D2
J7
Motor1
C17 10u
U2
R19 10k
R20 10k
R17 47k
R18 33k
C12 470p
C13 0.1u
C14 0.1u
C15 10u
C16 100u
IC3
IC4
J8
Motor2
U3
MPU-6500
NC
AUX_CL
VDDIO
SDO/ADO
REGOUT
FSYNC
INT
SDA/SDI
SCL/SCLK
nCS
AUX_DA
RESV
VDD
R11 4.7k
R12 4.7k
R13 4.7k
C9 100n
R16 10k
C10 100n
C11 100n
Sheet: /
File: SaposenBoard.kicad_sch
Title:
Size: A4
Date:
Rev:
KiCad E.D.A. kicad 6.0.11-2627ca5db0~126~ubuntu22.04.1
Id: 1/1