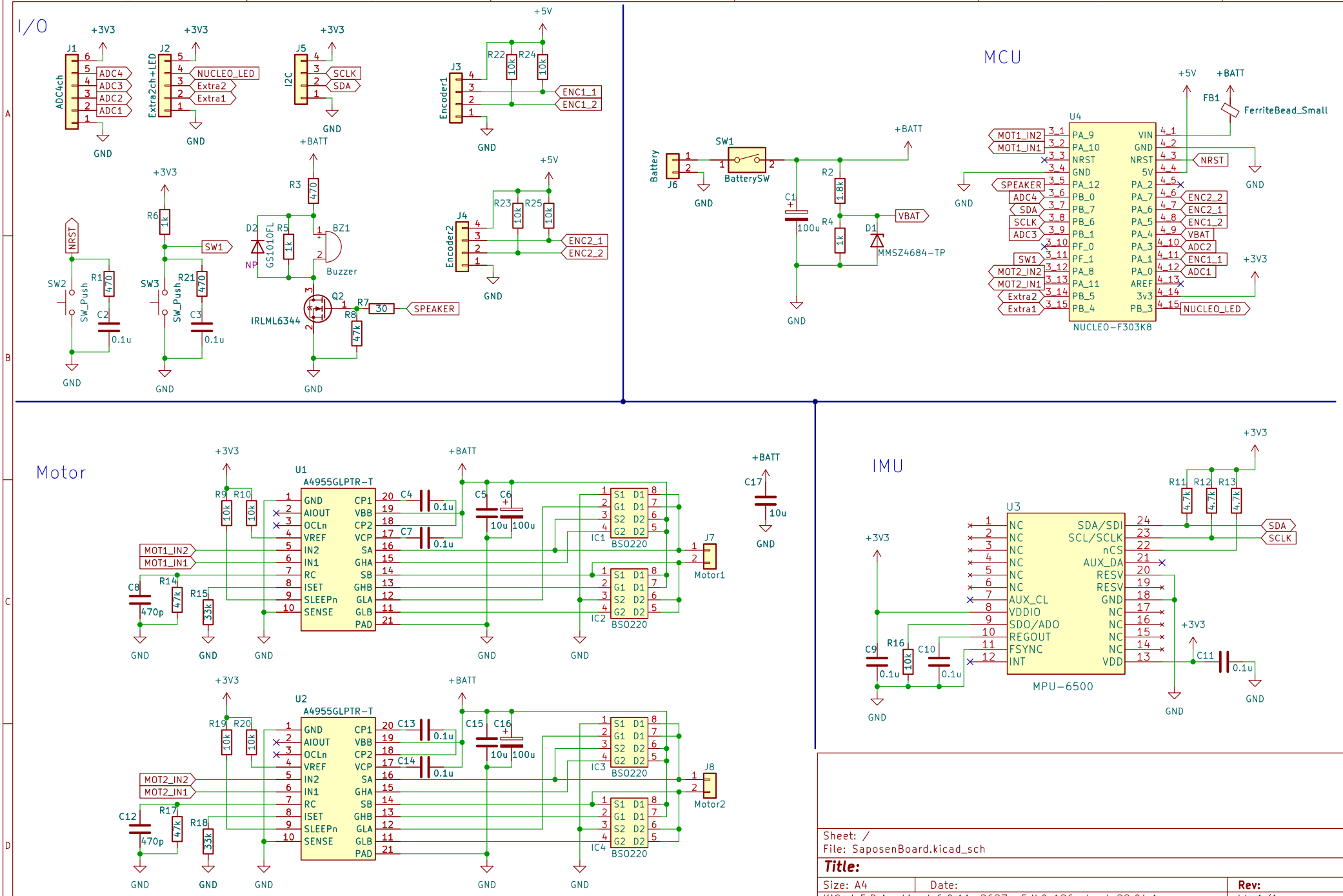


Sheet: /
File: SaposenBoard.kicad_sch

**Title:**

| Size: A4 | Date: | Rev: |
|---|---|---|
| KiCad E.D.A. kicad 6.0.11-2627ca5db0~126~ubuntu22.04.1 | | Id: 1/1 |