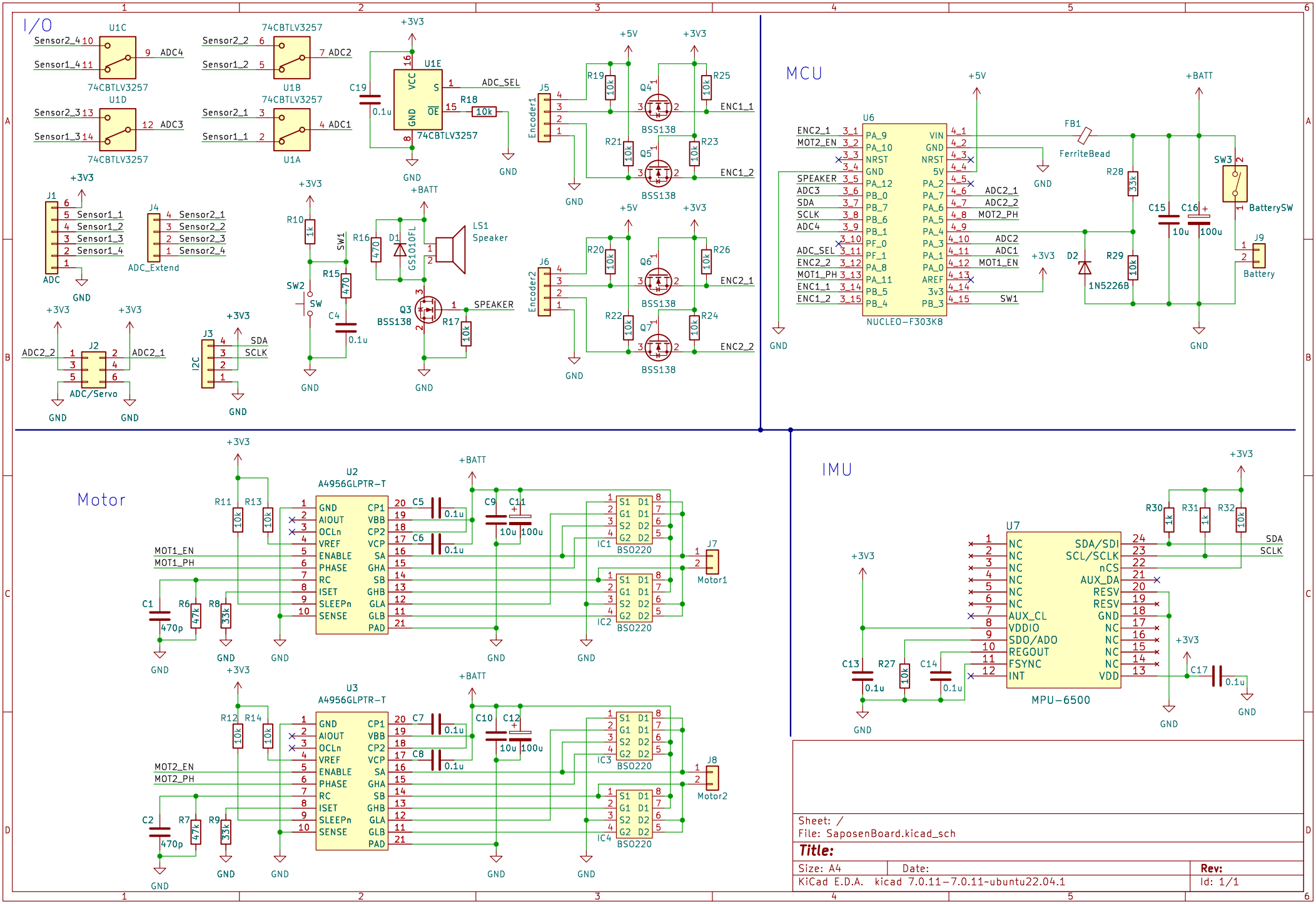

Sheet: /
File: SaposenBoard.kicad_sch

Title:

Size: A4	Date:	Rev:
KiCad E.D.A. kicad 7.0.11-7.0.11~ubuntu22.04.1		Id: 1/1