HISTORY		SERIAL NO.
DATE	PLAN RECORD	DWG.NO.
Jul. 29, 2015	Drawn by this works.	M－9000

配　布　先	
船　主	
監　督	
協 会 (NK)	e
資材 (丸亀)	e
本社 営　業	1
資　材	e
品　証	1
生　管	
加　工	
組　立	
外　業	
船　装	
船 装 (管)	
機 電 装	
機 電 装	1
塗　装	
DM	
生 技 課	
設計統括室	e
基 本 設 G	
船 体 設 G	
艤 装 設 G	
丸 生 設 G	
今 生 設 G	
計　画	
基 本 設	
船 体 設	
船 装 設	e
機 装 設	e
電 装 設	e
丸 船 情 (工)	
丸 艤 情 (船)	
丸 艤 情 (機)	
丸 艤 情 (生)	
今 船 情	
今 艤 情	e
渦潮電機	e
控	
合　計	3

本書には下記図面を含む。

(1) 自動制御及び遠隔制御に関する図面及び資料
(2) 機関部要目表
(3) 機関部予備品表及び要具表

CAUTION

THIS DRAWING OR DOCUMENT IS THE PROPERTY OF IMABARI SHIPBUILDING CO., LTD.

REPRODUCTION, COPYING, UTILIZATION FOR PURPOSES OTHER THAN AGREED, DISCLOSURE TO A THIRD PARTY, ARE STRICTLY SUBJECT TO PRIOR WRITTEN AGREEMENT BY IMABARI SHIPBUILDING CO., LTD.

FOR WORKING

(124 SHEETS INC. COVER)

CON-FERRED	OUTFIT DESIGN GROUP MACH. OUTFIT DESIGN TEAM	63,000M.T. D/W TYPE BULK CARRIER
	APPROVED T. Suzuki	
	CHECKED T. Mineyu...	
	CHECKED T. Yamauchi	SPECIFICATION (MACHINERY PART)
	DRAWN H. Kido	

SHIP NO.	CLASS	SCALE	DWG.NO.
S-888/889	NK(M0)	***	M－9000

IMABARI SHIPBUILDING CO., LTD.

Ⅲ　MACHINERY PART

I N D E X

SECTION 1　GENERAL DESCRIPTION

1.1	GENERAL	M1 － 1
1.2	MACHINERY PARTICULAR	M1 － 2
1.3	SHOP TEST	M1 －11
1.4	FUEL OIL CONSUMPTION OF MAIN ENGINE	M1 －13

SECTION 2　MAIN PROPULSION UNIT

2.1	GENERAL	M2 － 1
2.2	CONSTRUCTION AND MATERIAL	M2 － 1
2.3	FITTING AND ACCESSORY	M2 －10

SECTION 3　SHAFTING AND PROPELLER

3.1	GENERAL	M3 － 1
3.2	SHAFTING	M3 － 1
3.3	INTERMEDIATE SHAFT BEARING	M3 － 1
3.4	STERN TUBE BEARING AND SEAL	M3 － 2
3.5	PROPELLER	M3 － 2
3.6	MATERIAL	M3 － 3

SECTION 4　STEAM GENERATING PLANT

4.1	GENERAL	M4 － 1
4.2	AUXILIARY BOILER	M4 － 1

SECTION 5　ELECTRIC GENERATING PLANT

5.1	GENERAL	M5 － 1
5.2	MAIN DIESEL GENERATOR ENGINE	M5 － 1

SECTION 6　PUMP

6.1	GENERAL	M6 － 1
6.2	CENTRIFUGAL PUMP	M6 － 1
6.3	ROTARY PUMP	M6 － 3
6.4	RECIPROCATING PUMP	M6 － 4
6.5	MONROS PUMP	M6 － 4
6.6	OTHER PUMP	M6 － 5

SECTION 7　AIR COMPRESSOR AND FAN

7.1	MAIN AIR COMPRESSOR	M7 － 1
7.2	EMERGENCY AIR COMPRESSOR	M7 － 2
7.3	MAIN AIR RESERVOIR	M7 － 2
7.4	EMERGENCY AIR RESERVOIR	M7 － 2
7.5	ENGINE ROOM VENTILATING FAN	M7 － 2

SECTION 8　HEAT EXCHANGER

8.1	COOLER AND CONDENSER	M8 － 1
8.2	OIL HEATER	M8 － 3

SECTION 9　FRESH WATER GENERATOR

9.1	GENERAL	M9 － 1
9.2	FITTING AND ACCESSORY	M9 － 1

SECTION 10　PIPING GENERAL

10.1	GENERAL	M10－ 1
10.2	SEA CHEST	M10－ 2
10.3	VALVE AND COCK	M10－ 3
10.4	PIPING SCHEDULE	M10－ 5
10.5	STRAINER	M10－ 8
10.6	SEA WATER DISTRIBUTION CHART	M10－10
10.7	PIPING SYSTEM	M10－11

SECTION 11　INSULATION AND PAINTING

11.1	INSULATION	M11－ 1
11.2	PAINTING	M11－ 3

SECTION 12　MISCELLANEOUS EQUIPMENT

12.1	OIL PURIFYING DEVICE	M12－ 1
12.2	BILGE SEPARATOR	M12－ 2
12.3	ENGINEER'S WORKSHOP AND STORE ROOM	M12－ 3
12.4	LIFTING GEAR AND TOOL	M12－ 3
12.5	TANK IN ENGINE ROOM	M12－ 3
12.6	FLOOR, LADDER AND GRATING	M12－ 6
12.7	VENTILATION FOR ENGINE ROOM	M12－ 6
12.8	FIRE FIGHTING SYSTEM IN ENGINE ROOM	M12－ 7
12.9	INCINERATOR	M12－ 7
12.10	NAME PLATE AND CAUTION PLATE	M12－ 7

SECTION 13　AUTOMATION AND REMOTE CONTROL

13.1	GENERAL	M13－ 1
13.2	MAIN ENGINE REMOTE CONTROL SYSTEM	M13－ 1
13.3	ENGINE CONTROL ROOM	M13－ 2
13.4	ALARM SYSTEM	M13－ 2
13.5	INSTRUMENTATION AND CONTROL IN ENGINE CONTROL ROOM	M13－ 5

SECTION 14　SPARE PARTS

14.1	GENERAL	M14－ 1
14.2	MAIN ENGINE	M14－ 1
14.3	SHAFTING AND PROPELLER	M14－ 4
14.4	STEAM GENERATING PLANT	M14－ 4
14.5	DIESEL GENERATOR ENGINE	M14－ 5
14.6	PUMP	M14－ 6
14.7	MAIN AIR COMPRESSOR	M14－ 8
14.8	HEAT EXCHANGER	M14－ 8
14.9	OTHER MACHINERY	M14－ 8

SECTION 15　TOOLS AND OUTFITS

15.1	GENERAL	M15－ 1
15.2	MAIN ENGINE	M15－ 1
15.3	SHAFTING AND PROPELLER	M15－ 2
15.4	AUXILIARY BOILER	M15－ 2
15.5	DIESEL GENERATOR ENGINE	M15－ 2
15.6	HEAT EXCHANGER	M15－ 2
15.7	OTHER MACHINERY	M15－ 2
15.8	GENERAL TOOLS AND OUTFITS	M15－ 3

SECTION 1　GENERAL DESCRIPTION

1.1　GENERAL

The vessel shall be arranged for single screw propulsion with directly coupled diesel propelling machinery located in the engine room aft.
The main propulsion unit shall consist of one (1) set marine diesel engine, driving a propeller through a line of shafting.

The main engine and aux. boiler shall be able to use the heavy fuel oil of 380 cSt at 50℃.

The main diesel generator engine shall be able to use the heavy fuel oil of 380 cSt at 50℃. Diesel oil shall be used at starting, stopping, low load condition and furious load change condition of diesel gene. engine in accordance with the engine operation manual.

The steam generating plant shall consist of one (1) aux. boiler.

The electric generating plant shall consist of three (3) diesel generator sets.

1.2 MACHINERY PARTICULAR

Rule		
Kind of Ship		BULK CARRIER

Hull

Dimension		m	Lpp	B	D	d (Ext.)	
Tonnage		Ton	abt. G.T.		abt. D.W.		
Speed		knot	Sea Trial		abt. Service		

Main Engine

Type & No. of Set			HITACHI-MAN B&W, 2 stroke cycle , single acting, direct reversible, crosshead type diesel engine with turbocharger 6S50ME-B9.3× 1 set	
Output × Speed	Maximum Rating	kW× rpm	7,560 × 99.0	Turbocharger MET48MB × 1 set
	Normal Rating	kW× rpm	6,425 × 93.8 (85 %)	
Brake Mean Effective Press. at Max. Rating		MPa	*	
Mean Piston Speed at Max. Rating		m/s	7.31	
Cylinder No. & Size		mm	6 × ϕ 500 × 2,214	
Turning Motor		kW× rpm	2.2 × 1,200	

Shafting

Thrust Shaft	No.× mm	Attached to Main Engine	
Intermediate Shaft	No.× mm	1 × ϕ * × *	
Propeller Shaft	No.× mm	1 × ϕ * × *	

Propeller

Type & No. of Set		* Bladed Solid Type (Ni- Al- Br) × 1 set	
Diameter × Pitch	mm	ϕ * × *	
Exp. Area Ratio × Boss Ratio	—	* × *	
Skew Angle	deg.	*	

Auxiliary Boiler

Type & No. of Set		Composite system vertical type boiler × 1 set
Steam Pressure & Temperature	― ×℃	(Design) 0.8 MPa× Saturated (Work.) 0.55 MPa× Saturated
Heating Surface	m²	(Oil burning side) * × (Exh. gas side) *
Evaporation	kg/h	(Oil burning side) 1,100 × (Exh. gas side) 680 (M/E 85 % Load)
Feed Water Temp.	℃	abt. 60

Service	No.of Set	Type	Capacity (m^3 /h×MPa)	Motor (kW×rpm)	
Main Diesel Generator Engine	3	4-Cycle Diesel Engine	550 kW	900 rpm	6DE-18
Main Generator	3	Brushless A.C. Generator	625 kVA	500×900	450V × 60 Hz
Emergency Generator Engine	1	4-Cycle Diesel Engine	* kW	1,800 rpm	
Emergency Generator	1	Brushless A.C. Generator	* kVA	*×1,800	450V × 60 Hz
Main Air Compressor	2	MD V-type 2-Stage	(F.A.) 120 × 2.9	30×1800	VH-64
Emergency Air Compressor	1	MD Vertical 2-Stage	(F.A.) 13.5 × 2.9	3.7×1200	
Deck Service Air Compressor	1	MD Screw 1-Stage	(F.A.) 270 × 0.69	30×1800	TASK-1530

Service	No.of Set	Type	Capacity (m^3/h×MPa)	Motor (kW×rpm)	
Cooling Sea Water Pump	2	MD. V. Cent.	(T.H.) 560× 20 m	55×1800	Self-priming (No.1)
MGO Cooling Fresh Water pump	1	MD. H. Cent.	(T.H.) 5.0× 25 m	1.5×3600	
Jacket Cooling Fresh Water Pump	2	MD. V. Cent.	(T.H.) 102× 40 m	22×1800	
Main Air Comp. Cooling F.W. Pump	2	MD. H. Cent.	(T.H.) 3.2× 25 m	1.5×3600	
Main Lubricating Oil Pump	2	MD.V. Cent.	(D.P.) 220 × 0.42	60×1800	
Fuel Oil Booster Pump	2	MD. H. Gear	(D.P.) 2.9 × 0.4	1.5×1200	
Main Engine Fuel Oil Circulating Pump	2	MD. H. Gear	(D.P.) 4.2 × 1.0	3.7×1200	
Fuel Oil Transfer Pump	1	MD. H. Gear	(D.P.) 15 × 0.3	5.5×1200	
Diesel Oil Transfer Pump	1	MD. H. Gear	(D.P.) 4 × 0.3	2.2×1200	
Lubricating Oil Transfer Pump	1	MD. H. Gear	(D.P.) 4 × 0.3	1.5×1200	
Diesel Gene. Fuel Oil Circulating Pump	2	MD. H. Gear	(D.P.) 1.6 × 0.9	1.5×1200	
Diesel Gene. Diesel Oil Booster Pump	1	MD. H. Gear	(D.P.) 1.5 ×0.75	3.7×1200	
Stern Tube Lubricating Oil Pump	2	MD. H. Gear	(D.P.) 0.5 × 0.2	0.4×1200	
Diesel Gene. Lub. Oil Priming Pump	3	MD. H. Gear	(D.P.) 2.5 × 0.2	0.94×3600	※
L.O. Purifier Supply Pump	1	MD. H. Gear	(D.P.) 2.1 × 0.3	0.75×1200	
D/G L.O. Purifier Supply Pump	1	MD. H. Gear	(D.P.) 0.6 ×0.3	0.4×1200	
Bilge & Ballast Pump	1	MD. V. Cent.	(T.H.) 220/90×20/70 m	50×3600	Self-priming
Fire & G.S. Pump	1	MD. V. Cent.	(T.H.) 220/90×20/70 m	50×3600	Self-priming
Ballast Pump	2	MD. V. Cent.	(T.H.) 900× 25 m	90×1800	
Bilge Pump	1	MD. H. Recipro.	(T.H.) 2× 30 m	0.75×1200	
Sludge Pump	1	MD. H. Monros	(T.H.) 2.5× 41 m	1.5×1200	
Ref. Mach. Cooling Sea Water Pump	1	MD. H. Cent.	(T.H.) 40× 35 m	7.5×3600	

Service	No.of Set	Type	Capacity (m^3/h×MPa)	Motor (Kw×rpm)	
Drinking Water Pump	1	MD. V. Cent.	(T.H.) 5× 50 m	3.7×3600	
Fresh Water Pump	1	MD. V. Cent.	(T.H.) 5× 50 m	3.7×3600	
Hot Water Circulating Pump	1	MD. H. Cent.	(T.H.) 2× 10 m	0.4×3600	
Boiler HFO/MGO Burning Pump	1	MD. H. Trochoid	(D.P.) 268 ℓ/h×1.8	0.75×3600	※
Boiler Pilot Burner Pump	1	MD. H. Trochoid	(D.P.) 40 ℓ/h×0.8	0.09×3600	※
Boiler Forced Draft Fan	1	MD. Turbo	23 m^3/min ×2.94 kPa	2.2×3600	※
Boiler Feed Water Pump	2	MD. H. Cent.	(T.H.) 4× 100 m	7.5×3600	
Fuel Oil Purifier	2	MD. V. Centrifuge	2,100 ℓ/h (380 cSt at 50℃)	5.5×1800	SJ25H
Lubricating Oil Purifier	1	MD. V. Centrifuge	2,400 ℓ/h	5.5×1800	SJ25H
D/G Lubricating Oil Purifier	1	MD. V. Centrifuge	1,300 ℓ/h	3.7×1800	SJ15H
D/G Lubricating Oil By-pass Filter	3		*		※
Engine Room Ventilating Fan	2	MD. V. Axial	650 m^3/min × 0.29 kPa	7.5×1200	Reversible
Engine Room Ventilating Fan	1	MD. V. Axial	650 m^3/min × 0.29 kPa	7.5×1200	
Auxiliary Blower	2	MD. Turbo		45×3600	Attach to M/E
Motor for M/E hydraulic system	2	MD.		65×1800	Attach to M/E
Bilge Separator	1	with Content meter	2 m^3/h		
Shaft Grounding Equipment	1				with mV-Meter
Ballast Water Treatment System	1	Filter& Chemical Injection	900 m3/h×2		JFE (granule type)

Service	No.of Set	Type	Capacity (m^3/h×MPa)	Motor (kW×rpm)	
Overhead Travelling Crane	1	MD.	3 ton	3.0×1800 0.4×1800 －	Traverse to be hand operate
Lathe	1	MD.	Center distance 600 mm	2.2×1800	
Drilling Machine	1	MD.	φ 21	0.4×1800	
Grinding Machine	1	MD. 2－Wheels	φ 255 × 25t	0.75×1800	AC440V 3 φ 60Hz
Electric Welder	2	A.C. Arc Type	300 Amp		
Gas Cutting Machine	1	Acetylene Type	Oxygen B.×2 Acetylene B. ×1	Hose: Each 25 m×3	Foreign made
Chain Block	1 2 3		3 ton 1 ton 0.5 ton		
Control Room Air Conditioner	1	Packaged Type (R404a)	11.3 kW	2.2×3600	with E. heater
Water-based Local Fire Fighting System	1	Low Press. Type			
Sewage Treatment Unit	1				
Ballast Eductor	1		100 m^3/h		
Bilge Eductor	1		50 m^3/h		
F.O. Tank Pre-heating Unit	1				
F.O. Shifter Pump	1	MD. H. Gear	(D.P.) 7.2×0.49	3.7×1800	※ 100%Capa.
Fresh Water Generator	1		15 T/D		WM-15DK
Distillate Pump	1	MD. H. Cent.	(T.H.) 1.05× 30 m	0.75×3600	※
Ejector Pump	1	MD. H. Cent.	(T.H.) 18× 48 m	5.5×3600	※
Waste Oil Incinerator	1		349 kW		BGW-30N
Waste Oil Pump	1	MD.H.Trochoid	160 ℓ/h × 0.2 MPa	0.1kW	※
Exhaust & Cooling Fan	1	MD.	95 m^3/min × 2.65 kPa	7.5×3600	※
Burning Fan	1	MD.	11.4 m^3/min × 1.18 kPa	1.5×3600	※

Service	No.of Set	Type	Capacity (m^2)	Motor (kW×rpm)	
Jacket Cooling Fresh Water Cooler	1	Plate	*		
Main Lubricating Oil Cooler	1	Plate	*		
D/G Low Temp. Cooling F.W. Cooler	2	Plate	*		
MGO Cooling F.W. Cooler	1	Plate	*		
Main Engine MGO Cooler	1	Plate	*		
Diesel Generator MGO Cooler	1	Plate	*		
Auxiliary Condenser	1	H. Shell & Tube	10		
M/E FO 2nd Filter	1		ABS.50μ 4.2m3/h		
D/G FO 2nd Filter	1		E.F.10μ 1.6m3/h		
Shifter Fuel Oil Heater	1	Steam Heat			STM 0.55MPa 55 → 85℃
Purifier Lub. Oil Heater	1	Steam Heat			STM 0.55MPa 45 → 90℃
D/G Purifier Lub. Oil Heater	1	Steam Heat			STM 0.55MPa 45 → 90℃
Purifier Fuel Oil Heater	2	Steam Heat			STM 0.55MPa 55 → 98℃
Main Engine Fuel Oil Heater	1	Steam Heat			STM 0.55MPa 105 →140℃
Boiler Fuel Oil Heater	1	Electric Heat		6 kW	※
Diesel Gene. Fuel Oil Heater	1	Steam Heat			STM 0.55MPa 105 →140℃
Calorifier Unit	1	Electric & Steam Heat			STM 0.3MPa 10 → 70℃
Main Engine Warm-up Heater	1	Steam Heat	2		STM 0.55MPa
Main Air Reservoir	2	Cylindrical	5.0 m^3 × 2.9 MPa		
Emergency Air Reservoir	1	Cylindrical	150 ℓ × 2.9 MPa		※
Deck Service Air Reservoir	1	Cylindrical	2.0 m^3 × 0.69 MPa		
Control Air Dryer	1	Membrane	50 Nm^3/h		

Service	No.of Set	Type	Capacity (m^3)	Heat. Ratio (m^2/m^3)	
Heavy Fuel Oil Settling Tank	1		16	0.3	Integrated
Heavy Fuel Oil Service Tank	1		16	0.3	Integrated
Low Sulphur Fuel Oil Service Tank	1		8	0.3	Integrated
Diesel Oil Service Tank	2		8		Integrated
Sludge Tank	1		1.5	0.1	
Fuel Oil Drain Tank	1		1	0.1	In Double Bottom
Fuel Oil Overflow Tank	1		abt *	0.03	In Double Bottom
Waste Oil Tank	2		1	0.5	
Main Engine Lub. Oil Storage Tank	1		abt. 16		Integrated
Main Engine Lub. Oil Settling Tank	2		abt.8	0.2	Integrated
Main Engine Lub. Oil Sump Tank	1		abt. 16		In Double Bottom
Diesel Gene. Lub. Oil Storage Tank	1		5		
Diesel Gene. Lub. Oil Settling Tank	2		2.5	0.2	
Diesel Gene. Lub. Oil Sump Tank	Each 1		1.1		In Common Bed
Cylinder Oil Alarm Chamber	1		0.02		
Cylinder Oil Storage Tank	2		Total 40		Integrated

Service	No.of Set	Type	Capacity (m^3)	Heat. Ratio (m^2/m^3)	
Stern Tube Lub. Oil Sump Tank	1		abt. 1		In Double Bottom
Stuffing Box Drain Tank	1		0.9		
Scavenging Box Drain Tank	1		0.4	0.1	
MGO Cooling F.W. Expansion Tank	1		0.2		
Jacket Cool. F.W. Expansion Tank	1		1.5		
Deaeration Tank	1		abt. *		※
Fresh Water Pressure Tank	1	Cylindrical	1		
Drinking water Pressure Tank	1	Cylindrical	1		
Cascade Tank	1		1		With Inspect. Section
Bilge Primary Tank	1		2		
Bilge Tank	1		abt. *		In Double Bottom
Bilge Sludge Tank	1		abt. *	0.01	In Double Bottom
Clean Drain Tank	1		abt. *		In Double Bottom

Abbreviation :

abt.	About
D.	Driven
MD.	Motor Driven
Cent.	Centrifugal
*	Pending
Vert.	Vertical
Hor.	Horizontal
F.A.	Free Air
D.P.	Discharge Pressure
T.H.	Total Head
※	Maker’s supply

1.3 SHOP TEST

As regards under said machinery installed in the engine room, the under said running test shall be executed at the Maker's shop to demonstrate workmanship, proper working order and performance in accordance with the shop test projects.

In case electric current of 60 Hz shall not be available, auxiliaries driven by electric motors shall be tested by supplying available electric current and results on performance shall be converted into these for 60 Hz by proper calculation.

Necessary data shall be recorded during these tests and the results shall be submitted to the Owner.

For main engine

(1) Ahead running load test

1/2 load	1/2 hour
3/4 load	1/2 hour
Normal rating	1 hour
Maximum rating	1/2 hour
70% load	(Data only)

At normal rating load the fuel oil consumption test shall be conducted.

(2) Governor test

(3) Minimum revolution test

(4) Starting test and astern confirmation test

(5) Emergency trip test

(6) Overhaul inspection

During the shop test, the diesel oil shall be used and the lub. oil shall be used in accordance with Maker's standard.

For diesel generator engine

(1) Ahead running load test

1/2 load	(Data only)
Maximum rating	1 hour
10% over load	1/3 hour

(2) Governor test

(3) Starting test (Data only)

(4) Parallel running test

(5) Emergency trip test

(6) Fuel oil consumption measuring

These shop tests shall be carried out after coupling the engine with generator at the engine Maker's shop. The said load shall mean the generator load.

For pump and air compressor

(1) Performance test
Performance test shall be carried out for each set but in case two or more than two sets of same kind and capacity are installed, performance test shall be carried out only for one set.

(2) Continuous running test
Continuous running test at full load for each set shall be carried out.
The said tests shall be executed according to the Maker's usual practice by using available facilities in the Maker's shop.

For oil purifier

The shop test shall be carried out according to the Maker's standard and usual practice.

For fresh water generator

The shop test shall not be carried out.
The operating test shall be carried out onboard during sea trial.

1.4 FUEL OIL CONSUMPTION OF MAIN ENGINE

The fuel oil consumption of main engine shall be measured at shop test burning diesel oil.

The figure shall be 160.5 g/kW･h at normal rating on the basis of fuel net calorific value of 42,700 kJ/kg and ISO Standard Reference Conditions (Complying with MARPOL 73/78 ANNEX VI Reg.13 - Tier Ⅱ restriction). This consumption figure shall be subject to a tolerance of 5 %

ISO condition

Suction air temperature	25℃
Sea water temperature	25℃
Barometric pressure	1000 hPa

SECTION 2 MAIN PROPULSION UNIT

2.1 GENERAL

The main propulsion unit shall consist of MAN B&W marine diesel engine, 2-stroke, single acting, direct reversible crosshead diesel engine with exhaust turbocharger (model 6S50ME-B9).

2.2 CONSTRUCTION AND MATERIAL

The materials and dimensions for diesel engine and its equipment shall be in accordance with Japanese Industrial Standard (JIS) and Maker's standard.

2.2.1 Bedplate and main bearing

The bedplate consists of high, welded, longitudinal girders and welded cross girders with bearing supports.
For fitting to the engine seating, long, elastic holding down bolts tightened by hydraulic tools are to be used.
The oil pan, which is integrated in the bedplate, collects the return oil from the forced lubricating and cooling oil system.

The main bearings consist of Tin-aluminium shells. The bottom shell can, by means of special tools and hydraulic tools for lifting the crankshaft, be rotated out and in. The shells are kept in position by a bearing cap and are fixed by long elastic studs, with nuts tightened by hydraulic tools

2.2.2 Frame box

The frame box is of welded design. On the exhaust side, it is provided with a relief valve for each cylinder while, on the camshaft side, it is provided with a large door for each cylinder.
The crosshead guides are welded to the frame box.
For each cylinder, a slotted pipe for collecting part of the cooling oil outlet from the piston is bolted into the frame box.
The frame box, bedplate and cylinder frame are tightened by twin stay bolts. The stay bolts are tightened hydraulically with use of jacks.

2.2.3 Cylinder frame, cylinder liner and stuffing box

The cylinder frame unit is of welded type or cast iron (depending on production facility) with integrated camshaft frame. Together with the cylinder liner, they form the scavenge air space. At the chain drive, the upper part of the chain wheel frame is fitted. On the camshaft side of the engine, the cylinder frame units are provided with covers for cleaning the scavenge air space and for inspection of the scavenge ports and piston rings.
The gallery brackets are bolted onto the cylinder frame. Furthermore, the outer part of the telescopic pipe is fitted for the supply of piston cooling oil.

A piston rod stuffing box for each cylinder unit is fitted at the bottom of the cylinder frame. The stuffing box is provided with sealing rings for scavenge air, and with oil scraper rings to prevent oil from entering the scavenge air space.

The cylinder liner is made of boron cast iron alloy. The cylinder liner is bore cool type. The cylinder liner has scavenge ports and drilled holes for cylinder lubrication.

2.2.4 Cylinder cover

The cylinder cover is of cast or forged steel (depending on production facility), made in one piece, and has bores for cooling water. It has a central bore for the exhaust valve and bores for fuel valves, safety valve, starting valve and indicator valve.
The cylinder cover is tightened to the cylinder frame with studs and nuts by hydraulic jacks.

2.2.5 Crankshaft

The crankshaft is of the semi-built type, made of forged steel throws.
The crankshaft is built integral with the thrust shaft and is, on the aft end, provided with a flange for the turning wheel and for coupling to the intermediate shaft. At the fore end, the crankshaft can be provided, if needed, with a flange for a counterweights and/or a tuning wheel with additional price.

2.2.6 Axial vibration damper

The engine is fitted with an axial vibration damper, which is mounted on the fore end of the crankshaft.
The damper consists of a piston and a split-type housing located forward of the foremost main bearing. The piston is made as an integral collar on the main journal, and the housing is fixed to the main bearing support.

2.2.7 Thrust bearing

The thrust bearing is of the B&W-Michell type, and consists of a thrust collar on the crankshaft, a bearing support, and segments with white metal.
The propeller thrust is transferred through the thrust collar, the segments, and the bedplate to engine seating and end chocks.
The thrust bearing is lubricated by the engine's main lubricating oil system.

2.2.8 Connecting rod

The connecting rod is made of cast or forged steel (depending on production facility) and provided with bearing caps for the crosshead and crankpin bearings.
The crosshead and crankpin bearing caps are secured to the connecting rod by studs and nuts which are tightened by hydraulic jacks.
The crosshead bearing consists of a set of Tin-aluminium shells. The crosshead bearing cap has an angular cut-out for the piston rod.
The crankpin bearing consists of Tin-aluminium shells.
Lubricating oil is supplied through ducts in the crosshead and connecting rod.

2.2.9 Piston, piston rod and crosshead

The piston consists of piston crown and piston skirt. The piston crown is made of heat-resistant steel and has four ring grooves which are hard-chrome plated on both the upper and lower surfaces of the grooves. The piston skirt is of cast iron and provided with bronze bands.

The piston rod is of forged steel and is surface-hardened on the running surface for the stuffing box. The piston rod is connected to the crosshead with four screws. The piston rod has a central bore which, in conjunction with a cooling oil pipe, forms inlet and outlet for cooling oil.

The crosshead is of forged steel and is provided with guide shoes with white metal on the running surface.
The telescopic pipe for oil inlet and the pipe for oil outlet are mounted on the top of the guide shoes.

2.2.10 Exhaust valve and valve gear

The exhaust valve consists of a housing with gas channel and spindle guide. The housing is water cooled and made of cast iron. Between the cylinder cover and the housing, there is a bottom piece.
The bottom piece is water cooled on its outer surface.
The valve spindle is of heat resistant steel with “hard metal” welded onto the seat, and is provided with small vane wheel on which the exhaust gas acts during operation, thus making spindle rotate slightly.

The hydraulic system consists of an actuator, activated by a cam on the camshaft, a high-pressure pipe, and an oil cylinder for the exhaust valve spindle, mounted on top of the housing. The hydraulic system opens the exhaust valve, while the closing force is provided by an air spring. The closing of the exhaust valve is damped by means of an oil cushion on top of the spindle.
The exhaust valve close timing is controlled by not only the cam but also the electronic valve (ELFI-V valve), which is electronically controlled by the Cylinder Control Units of Engine Control System.

2.2.11 Fuel valve, starting air valve, and indicator valve

Each cylinder cover is equipped with two fuel valves, one starting valve and one indicator valve. The opening of the fuel valve is controlled by the fuel oil high pressure created by the fuel pumps, and the valve is closed by a spring.
The fuel valves are equipped with a slide and circulating bore, to ensure an adequate flow of heated oil through the fuel pump housing and fuel valves at all loads including stopped engine. By means of the “built-in” circulation of preheated fuel oil, the fuel pumps and fuel valves can be maintained at service temperature, also while the engine is stopped. Consequently, it is not necessary to change to diesel oil when entering harbour, provided that the circulating pump is kept running and preheating of the circulated fuel oil is maintained.

The starting valve is opened by control air from the starting air distributor and closed by a spring.

The engine is fitted with an indicator valve to which the PMI pressure transducer can be connected.

2.2.12 Fuel oil pressure booster and fuel oil high pressure pipe

The engine is provided with one hydraulically activated fuel oil pressure booster for each cylinder. The fuel oil pressure booster consists of a pump housing, a hydraulic piston and plunger. In order to prevent fuel oil from being mixed with the servo oil, the fuel oil pressure booster is provided with a sealing device.
The fuel oil injection is controlled by electronic valve (ELFI-V valve), which is electronically controlled by the Cylinder Control Units of Engine Control System.

The fuel oil high-pressure pipes are equipped with protective hoses and are neither heated nor insulated.

2.2.13 Hydraulic Cylinder Unit (HCU)

The HCU consists of a base plate on which a distributor block is mounted.
The distributor block is fitted with one accumulator to ensure that the necessary hydraulic oil peak flow is available for the electronic fuel injection.
The distributor block serves as a mechanical support for the hydraulically activated fuel oil pressure booster and Alpha lubricator.

There is one HCU per two cylinders. The HCU is equipped with two fuel oil pressure boosters, two ELFI-V valves and two Alpha Lubricators. Thereby, one HCU is operating two cylinders.

2.2.14 Hydraulic Power Supply (HPS)

The HPS is installed in the front end of the engine. The HPS is electrically driven and consists of two electric motors each driving a hydraulic pump.

The pressure for the hydraulic oil is approx. 30.0 MPa. Each of the pumps has a capacity corresponding to min. 55% of the engine power. In case of malfunction of one of the pumps, it is still possible to operate the engine with 55% engine power corresponding to 85% speed.

2.2.15 Camshaft and cams

The camshaft is made in one or two pieces depending on the number of cylinders, with exhaust cams shrunk onto the shaft. The exhaust cams are of a hardened roller face. They can be adjusted hydraulically.

2.2.16 Chain drive

The chain drive is integrated with the thrust bearing in the aft end of the engine. The camshaft is driven from the crankshaft by chain drive. The chain drive is provided with chain tightener. The long free lengths of chain are supported by guidebars.
The starting air distributor is driven by the camshaft.

2.2.17 Reversing

Reversing of the engine is performed electronically and pneumatically, by changing the timing of the Fuel Injection and the starting air valves.
The exhaust gear is not reversible.

2.2.18 Engine manoeuvring system

The engine is provided with an electric-pneumatic manoeuvring system. The system transmits orders from the manoeuvring console to the engine.
The regulating system makes it possible to start, stop and reverse the engine and to control the engine. The speed control dial on the manoeuvring console gives a speed-setting signal to the Engine Control System.

2.2.19 Main Operating Panel (MOP)

In the engine control room a MOP is located, which is a Personal Computer (PC) with a touch screen as well as a trackball from where the operator can carry out engine commands, adjust the engine parameters, select the running modes, and observe the status of the control system.

2.2.20 Engine Side Console (ESC)

In normal operating the engine is controlled from engine control room.
Alternatively, the ESC can be activated. This redundant control is to be considered as a substitute for the previous engine side control console mounted directly onto the MC engine.
The ESC is place on the engine.
From the ESC, the basic functions are available, such as starting, engine speed control, stopping, reversing, and the most important engine data are displayed.

2.2.21 Governor system

The governor functions equivalents to the conventional governor system are included in the Engine Control System.

2.2.22 Starting air system

The starting air system comprises a main starting valve, a non-return valve, a bursting disc for the branch pipe to each cylinder, a starting air distributor, and starting valves on each cylinder. The main starting valve is connected with the main manoeuvring system, which controls the start of the engine.
The starting air distributor regulates the supply of control air to the starting valves so that they supply the engine cylinders with starting air in the correct firing order.

2.2.23 Scavenging air system

The air intake to the turbocharger takes place direct from the engine room through the intake silencer of the turbocharger. From the turbocharger, the air is led via the charging air pipe, air cooler and scavenging air receiver to the scavenging ports of the cylinder liners. The charging air pipe between turbocharger and air cooler is provided with a compensator and is heat insulated on the outside.

2.2.24 Exhaust turbocharger and air cooler

The engine is fitted with turbocharger arranged on the side of the engine.
The turbine side is provided with cleaning device.

The engine is fitted with air cooler mono-block type so arranged for easy cleaning with chemicals at the engine standstill. The air cooler consists of tube plates of rolled brass, cooling tubes with cuprous fins and cast iron covers coated with resin.
After the air cooler, a water mist catcher is mounted.

2.2.25 Auxiliary blower

The engine is provided with two electrically-driven auxiliary blowers. The suction sides of the blowers is connected to the scavenge air space after the air cooler.
Between the air cooler and the scavenge air receiver, flap valves are fitted with automatically close when the auxiliary blowers supply the air.
Both auxiliary blowers will start operating before the engine is started and will ensure sufficient scavenge air pressure to obtain a safe start.
During operation of the engine, both auxiliary blowers will start automatically each time the engine load is reduced to about 30–40%, and they will continue operating until the load again exceeds approximately 40–50%.
In cases where one of the auxiliary blowers is out of service, the other auxiliary blower will automatically compensate without any manual readjustment of the valves, thus avoiding any engine load reduction. This is achieved by the automatically working non-return valves in the suction pipe of the blowers.

2.2.26 Exhaust gas system

From the exhaust valves, the gas is led to the exhaust gas receiver where the fluctuating pressure from the individual cylinders is equalised, and the total volume of gas led further on to the turbochargers at a constant pressure. After the turbocharger, the gas is led to the exhaust pipe system.
Compensators are fitted between the exhaust valves and the receiver, and between the receiver and the turbocharger.
The exhaust gas receiver and exhaust pipes are provided with insulation, covered by galvanised steel plating.

2.2.27 Turning wheel and turning gear

The turning wheel has cylindrical teeth and is fitted to the thrust shaft. The turning wheel is driven by a pinion on the terminal shaft of the turning gear, which is mounted on the bedplate.
The turning gear is driven by an electric motor with built-in gear and brake. The turning gear is equipped with a blocking device that prevents the main engine from starting when the turning gear is engaged. Engagement and disengagement of the turning gear is effected manually by an axial movement of the pinion.

2.2.28 Gallery arrangement

The engine is provided with gallery brackets, stanchions, railing and platforms (exclusive of ladders). The brackets are placed at such a height that the best possible overhauling and inspection conditions are achieved. Some main pipes of the engine are suspended from the gallery brackets.

2.2.29 Cylinder lubricators (Alpha Lubricator System; ALS)

The cylinder lubricator units, one per engine cylinders, are mounted. The oil is led to the lubricator unit, through a pipe system from an elevated tank (Shipbuilder's supply).
The ALS is electronically controlled by the Cylinder Control Units of Engine Control System.

The setting of Alpha lubricator system can be performed by MOP.

2.2.30 Piping arrangements

The lubricating oil, cylinder cooling fresh water and air coolers are cooled by means of sea water. The pipes for the lubricating oil system and for the fresh water on the engine are of steel, the sea water pipes are of galvanized steel.

a) Forced lubrication and oil cooling:
The main forced lubrication is led to each main bearing through branches from the main lubrication pipe located along the engine. Cooling oil is led to the telescopic pipe through branches from the cooling oil main pipe located along the cooling jackets on the exhaust side of the engine, through which the oil is led to the crossheads. From there, some of the oil is branched off for lubrication of the crosshead shoes and crosshead bearings and is led through the bored connecting rod to the crank bearing.
Some of the oil is led through a pipe in the bore of the piston rod for cooling of the piston. The oil returns from here through the piston rod and let out through a duct in the crosshead.
The camshaft bearing lubricating oil and the exhaust valve driving gear oil are supplied from cooling oil system.

b) Cooling water system:

Cylinders and exhaust valves are fresh water cooled.

The fresh water is led from the main piping along the engine through branches to the each cylinder liner. The fresh water is led from the cylinder liner up through the cylinder cover and exhaust valve housing and from there to a manifold through which it is carried back to the fresh water cooler.

2.3 FITTING AND ACCESSORY

The following accessories shall be supplied together with main engine.

1 － set of exhaust gas turbocharger
1 － set of air cooler
1 － set of flywheel
1 － set of turning gear
1 － set of thrust bearing
2 － sets of auxiliary blower
1 － set of main starting valve with non-return valve
1 － sets of ALPHA lubricator system
1 － set of grating for engine
1 － set of piping attached to the engine
1 － set of manoeuvring device
1 － set of pressure gauge
1 － set of thermometer
1 － set of manometer
1 － set of fuel oil 2nd filter
1 － set of oil mist detector
1 － set of hydraulic power supply unit (HPS)
1 － set of hydraulic cylinder unit (HCU)
2 － sets of main operating panel (MOP)
1 － set of local operating panel (LOP)
1 － set of cylinder control unit (CCU)

SECTION 3 SHAFTING AND PROPELLER

3.1 GENERAL

The entire rotating system including main engine, shafting and propeller shall be designed so that the serious torsional vibration requiring barred range shall not occur between 85% and 100% of revolution corresponding to the maximum rating of main engine.

The calculation sheets regarding the torsional vibration shall be submitted to the Owner and the Classification Society for approval.

3.2 SHAFTING

The shafting shall be one (1) line which consist of one (1) intermediate shaft and one (1) propeller shaft.
The shafting shall be of solid type and machined smooth all over except journals and coupled face which shall be finely finished.
The coupling flanges shall be integrated with the shaft and protected by sheet steel guards.
The shafting shall be bolted together with straight reamer bolts.

The diameter of intermediate shaft shall be determined in accordance with the requirement of the Classification Society.
The diameter of shaft at intermediate shaft bearing shall be added 5mm to the determined shaft diameter.
The diameter of propeller shaft shall be in accordance with the requirement of the Classification Society.

The aft part of propeller shaft shall be machined with 1/20 taper and threaded at end for fitting the propeller with a steel nut.
The propeller shaft shall be withdrawn inboard by removing intermediate shaft, and the eye plate for withdrawing shall be provided.

3.3 INTERMEDIATE SHAFT BEARING

One (1) intermediate shaft bearing of removable bearing shell type shall be fitted for proper support of the intermediate shaft.

Intermediate shaft bearing shall be provided bearing metal at upper and lower part.

The bearing shall be filled with lub. oil from the pipes of branched main engine lub. oil line.
Lub. oil shall flow into the bearing clearance from the side of shaft center line through the clearance between housing bore and outside of bearing metal and lubricate the bearing.
Lub. oil shall drain off through the both end of bearing metal and flow to the returning main engine lub. oil sump tank.

3.4 STERN TUBE BEARING AND SEAL

The stern tube shall accommodate one (1) stern tube bearing shell and two (2) stern tube oil sealing devices.

The stern tube sealing device at aft side shall be provided with stand-by seal ring.

The wear down measuring apparatus shall be provided to measure clearance at the aft side bushing of the stern tube.

The rope guard fabricated steel with anode shall be provided between aft end of stern frame boss and propeller boss.

The wire net guard (propeller boss grooved type) shall be provided.

3.5 PROPELLER

There shall be provided one solid type propeller. The diameter and pitch of propeller shall be suitable for the power and speed. The propeller shall rotate clockwise, seen from aft when going ahead. The propeller shall be of key-less type and fitted on the taper end of propeller shaft and secured by a nut.
The forward end of boss shall be counterbored and fitted with a sealing gland.

The propeller surface shall be ground smooth. A propeller cap shall be bolted to the boss and its interior shall be filled with grease.

The performance of propeller shall be designed under the following conditions.

Main engine output	Normal output (6,425 kW)
Main engine revolution	abt. 97.6 rpm (abt. 4% up)
Draught	Designed loaded draught
Sea condition	Calm sea

The propeller shall be swung on a mandril and statically balanced.

3.6 MATERIAL

Shafting :

Intermediate shaft	Forged steel
Propeller shaft	Forged steel
Nut for propeller shaft	Forged steel
Coupling bolt	Forged steel

Stern tube bearing and seal :

Stern tube bearing	Cast iron with white metal (WJ2)
Sealing ring	Fluoro rubber (FPM)

Intermediate shaft bearing :

Upper and lower shells	Cast iron
Bearing metal	White metal (WJ2)

Propeller :

Propeller	Nickel aluminum bronze
Propeller cap	Bronze
Rope guard	Mild steel plate

SECTION 4 STEAM GENERATING PLANT

4.1 GENERAL

The steam generating plant shall be in accordance with the following descriptions and particulars described in Subsection **1.2 MACHINERY PARTICULAR**.

4.2 AUXILIARY BOILER

4.2.1 Construction

The boiler shall consist of the doughnut shaped steam drum and water drum which are connected by two rows of water tubes.

The flame of oil burning side shall transfer heat to water in inside water tubes by radiation. It shall become the combustion gas and be branched into two rows of water tubes and meet at the exit and be discharged from the funnel.
Contact heat transfer shall be made when water passes in water tubes and heat be transferred to water efficiently.

The exhaust gas side shall be provided with a group of a water tubes reasonably arranged circumferentially on upper and lower drums to transfer heat efficiently.
The exhaust gas inflowed through the flue shall be separated in two directions of left-hand and right-hand to effect heat exchange and discharged through the outlet funnel as low temperature exhaust gas.

Inner and outer casings shall be available. Heat insulating material shall be placed between inner and outer casings to check radiation of heat.
Insulating fire clay shall be placed in the lower part of the furnace and narrowed part of gas shorting.

4.2.2 Material

End plate	Boiler steel plate
Furnace	Boiler steel plate
Water tube	Boiler tube
Shell plate	Boiler steel plate

4.2.3 Fitting and accessory

1 － pressure gauge root valve
2 － sets of water gauge
(including water level controller)
1 － set of oil burning unit
3 － sets of soot blower (Compressed air type)
2 － safety valve
1 － main steam stop valve
Each 1 － main and aux. feed check valve
Each 1 － main and aux. feed stop valve
1 － surface blow-off valve
1 － bottom blow-off valve
4 － water level gauge root valve
1 － boiler water sampling valve

SECTION 5 ELECTRIC GENERATING PLANT

5.1 GENERAL

There shall be provided three (3) sets of main diesel generators.

Regarding the electric generator, refer to **PART IV ELECTRIC PART**.

5.2 MAIN DIESEL GENERATOR ENGINE

5.2.1 General

The main diesel generator engine shall be vertical single acting, 4-cycle direct injection, air cooled turbocharged diesel engine with air cooler.

5.2.2 Construction and material

(1) Crankshaft

The crankshaft shall be made of high grade forged steel one piece type.

(2) Main bearing shell

The main bearing shell shall be made of aluminum alloy metal lined, split in two (2) pieces type mild steel. It shall be completed thin-shell type, and provided with complete interchangeability.

(3) Engine frame

Engine frame shall be made of special cast iron, of under sling bearing structure, which is sufficiently rigid for high explosion pressure.

The engine frame shall have big inspection holes on the both side in order to be taken out the main and crank pin bearing shells, and other main moving parts.

The intake air passage shall be provided at the upper part of engine frame on the exhaust manifold side providing a double wall structure, thus substantially enclosing sound insulation.
Also passages of cooling water inlet/outlet and Lub. oil inlet shall be built into this engine frame to minimize external piping.

The main bearing cap shall be secured rigidly to the engine frame by hydraulically tightening two mounting bolts and two side bolts.

(4) Cylinder head

The cylinder head shall be made thick with special cast iron. It has a fuel injection nozzle on its center, and each 2 pieces of intake and exhaust valves and rocker arms are arranged around the fuel injection nozzle.

(5) Cylinder liner

The cylinder liner shall be made of high grade cast iron against abnormal wear, and its inside is precisely hone-finished.
The cylinder liner cooled by freshwater shall be made thick with ample rigidly so that it is sufficiently endurable even under high combustion pressure and the thermal stress.

(6) Piston, piston pin and piston ring

The piston shall be made of ductile cast iron as mono-block type and cooled by crankcase lubricating oil through the connecting rod and piston pin inside.

1st and 2nd piston ring grooves of piston shall be surface-hardened to have resistance against wear down.

The piston pin shall be made of carbonizing-hardening chromium-molybdenum steel.
A full floating method shall be adopted in fitting the piston pin.

The three piston rings and one oil ring shall be made of cast iron, and piston rings and oil rings shall be chromium plated.

(7) Connecting rod and crank pin bearing shell

The connecting rod shall be made of forged steel, and it is constructed so that the forging is divided into 3 parts and the large end part is horizontally divided.
The piston pin bush shall be of cylindrical steel lined with lead bronze. The crank pin bearing shell shall be of aluminum alloy metal lined completed thin shell type.

(8) Fuel injection pump and fuel nozzle holder

Both the pump with a tappet and the nozzle of Bosch type shall be attached to each cylinder.

The circulation type fuel injection pump shall be adopted.

(9) Intake and exhaust valve

Both intake and exhaust valves shall mushroom type of heat resistance steel, and provided with the valve rotators and removable seat rings respectively.

The exhaust valve shall be made of heat resistance steel.
The seat of exhaust valve shall be plated with stellite.
The exhaust valve seat shall be cooled by fresh water and the treatment of anti-corrosion shall be applied for gas passage.

5.2.3 Piping

(1) Cooling system

Cooler line (LT-FW)
The engine driven LT-FW pump shall run cooling water from the external freshwater cooler into the secondary L.O. cooler and air cooler.
Under low load condition, charge air inverse warming would be carried out automatically by means of cutting off cooling water from the secondary air cooler.

Cylinder jacket line (HT-FW)
The engine driven HT-FW pump shall be circulated cooling water, which is controlled by the attached thermostat, in the primary air cooler, cylinder jacket and cylinder heads.

(2) Lub. oil system

A gear pump shall be driven by the auxiliary machinery driving gear of engine.
Lub. oil sucked up from the oil sump shall be sent out into cooler and oil filter, and lubricates main bearings, crank pin metals, piston pin metal, camshaft bearings, swing arm, valve rocker arm, timing gear train and turbocharger, while some oil cools pistons and drops back to the oil sump.
For the priming of the lubrication system during engine is in rest, electric motor driven pre-priming pump of continuous priming system shall be provided.
To safeguard the oil cooler and oil piping against excessive oil pressure, a relief valve shall be attached.

5.2.4 Fitting and accessory

The following accessories shall be supplied with the engine.

1 － turbocharger
1 － air cooler
1 － flywheel
1 － maneuvering gear
1 － governor
1 － exhaust gas manifold
1 － mechanical tachometer
1 － set of pressure gauge
1 － set of thermometer
1 － lub. oil filter
1 － lub. oil by-pass filter (centrifugal type)
1 － lub. oil pump (gear)
1 － lub. oil cooler
2 － cooling fresh water pump (centrifugal)
1 － turning bar
1 － common bed
1 － set of fuel oil shut-off device for emergency trip

SECTION 6 PUMP

6.1 GENERAL

The particulars of pumping equipment shall be in accordance with Subsection **1.2 MACHINERY PARTICULAR**.

The continuous running pumps for propulsive use shall be provided with two (2) sets, each one of them shall be as stand-by in principle.

6.2 CENTRIFUGAL PUMP

Connection between pump shaft and motor shaft shall be of the pin and buffer type flexible coupling or rigid coupling according to the Maker's standard.
Pump casing except for horizontal pumps, specially constructed type pumps and small vertical pumps shall be split or removed upward only so that the rotating members may be overhauled for inspection or replacement without disturbing the pipe connections.

The pumps which self-priming is necessary shall be provided with self-priming unit.

The materials of main parts of centrifugal pumps shall be as follows:

Name	Casing	Impeller	Shaft	Shaft seal
Cool. S.W. pump	Bronze	Phosphor bronze	Stainless steel	Gland packing
Jacket cool. F.W. pump	Cast iron	Phosphor bronze	Stainless steel	Mechanical seal
Fire & G.S. pump (Bilge & ballast pump)	Bronze	Phosphor bronze	Stainless steel	Gland packing
Ballast pump	Bronze	Phosphor bronze	Stainless steel	Gland packing
Ref. machine cool. S.W. pump	Bronze	Stainless steel	Stainless steel	Gland packing

Name	Casing	Impeller	Shaft	Shaft seal
Drinking water pump	Cast iron	Phosphor bronze	Stainless steel	Gland packing
Fresh water pump	Cast iron	Phosphor bronze	Stainless steel	Gland packing
Hot water circulating pump	Cast iron	Phosphor bronze	Stainless steel	Gland packing
Boiler feed water pump	Cast iron	Phosphor bronze	Stainless steel	Gland packing
Main air comp. cooling F.W. pump	Cast iron	Phosphor bronze	Stainless steel	Gland packing
MGO Cooling Fresh Water pump	Cast iron	Phosphor Bronze	Stainless Steel	Gland Packing

The fittings and accessories shall be as follows:

1 － set of coupling bolt, nut and rubber ring, if fitted
1 － coupling cover for horizontal type pump, if fitted
1 － drain plug
1 － gauge board fitted with suction and discharge pressure gauges
Each 1 － root cock or valve for pressure gauge
1 － air ejector, if fitted
1 － common bed for horizontal type pump, if fitted

Main lub. oil pump

The material of main L.O. pump shall be accordance with maker standard.

The specified capacity and motor of main L.O. pump shall be designed on the following viscosity.

Name	Capacity	Motor output
Main lub. oil pump	26 cSt	260 cSt

6.3 ROTARY PUMP

Rotary pumps shall develop rated capacity and discharge pressure when operating with the under-said suction conditions.

Name	Suction vacuum (MPa)	Viscosity (cSt)	Shaft seal
Fuel oil transfer pump	－0.05	26 - 1,000	Gland packing
Diesel oil transfer pump	－0.05	2 - 1,000	Mechanical seal
Lub. oil transfer pump	－0.05	26 - 1,000	Gland packing
Fuel oil booster pump	－0.05	2 - 260	Mechanical seal
M/E fuel oil circulating pump	＋0.40	2 - 260	Mechanical seal
D/G fuel oil circulating pump	＋0.40	2 - 260	Mechanical seal
D/G diesel oil booster pump	－0.05	2 - 260	Mechanical seal
Stern tube L.O. pump	－0.05	26 - 1,000	Gland packing
L.O. puri. supply pump	－0.05	26 - 260	Gland packing
D/G L.O. puri. supply pump	－0.05	26 - 260	Gland packing

The materials of main parts of the gear pumps shall be as follows:

Casing	Cast iron
Gear	Carbon steel
Shaft	Carbon steel

The fittings and accessories shall be as follows:

1 － set of coupling bolt, nut and rubber ring or coupling bush
1 － coupling cover for horizontal type pump
1 － relief valve
1 － gauge board fitted with suction and discharge pressure gauges
Each 1 － root cock or valve for pressure gauge
1 － common bed for horizontal type pump

6.4 RECIPROCATING PUMP

Reciprocating type bilge pump shall be provided with conventional packing type gland seals and develop rated capacity and discharge pressure when operating with suction vacuum of －0.05MPa and viscosity of 1～1000 cSt.

The materials of main parts of reciprocating pump shall be as follows:

Cylinder cover	Cast iron
Cylinder liner	Brass casting
Piston	Brass
Valve	Rubber
Piston rod	Stainless steel

The fittings and accessories shall be as follows:

1 － safety valve
1 － air vent plug
1 － drain plug
2 － V belt
Each 1 － V pulley
1 － safety cover
1 － gauge board fitted with suction and discharge pressure gauges
2 － gauge cock

6.5 MONROS PUMP

Monros pump shall be one kind of displacement type screw pump and provided with conventional packing type gland seals.
Monros type sludge pump shall develop rated capacity and discharge pressure when operating with suction vacuum of －0.05MPa and viscosity of 1～1000 cSt.

The materials of main parts of monros pump shall be as follows:

Stator	Rubber
Shaft, rotor and con-rod	Stainless steel
Pump stand	Cast iron

The fittings and accessories shall be as follows:

1 － safety valve
2 － V belt
Each 1 － V pulley
1 － safety cover
1 － gauge board fitted with suction and discharge pressure gauges
1 － common bed

6.6 OTHER PUMP

The construction, materials and design of pumps attached to the main engine, main diesel generator engines, aux. boiler, oil purifiers, air compressors, waste oil incinerator, fresh water generator and etc. shall be in accordance with Maker's standard.

SECTION 7 AIR COMPRESSOR AND FAN

7.1 MAIN AIR COMPRESSOR

There shall be provided two (2) sets of main air compressor for main engine and main diesel generator engine starting and for control air and general air service.

Control air and general air service shall be supplied through the air reducing valve from main air reservoir.

The main air compressor shall be of electric motor driven two stage compression, reciprocating type and shall be completed with air coolers and unloader.
The cylinders, cylinder covers and air coolers shall be cooled by fresh water.

The materials shall be as follows:

Cylinder	Cast iron
Piston	Aluminum
Connecting rod	Forged steel
Crank shaft	Forged steel
Crank case	Cast iron

The fittings and accessories shall be as follows:

1 － coupling with bolts and nuts
1 － coupling cover
1 － set air cooler after each stage
1 － pressure gauge after each stage
1 － relief valve after each stage
1 － set of drain valve
1 － unloader
1 － suction air filter
1 － oil level indicator or sounding rod
1 － oil drain plug for crank case

7.2 EMERGENCY AIR COMPRESSOR

The emergency air compressor shall be of electric motor driven.
The materials of emergency air compressor shall be in accordance with Maker's standard.

7.3 MAIN AIR RESERVOIR

The main air reservoir shall be made of cylindrical welded steel construction. The capacity of each air reservoir shall be sufficient to ensure six (6) starts of the main engine from rest in either direction without replenishment.

The fittings and accessories shall be as follows:

1 － safety valve
1 － charging valve
1 － main stop valve
1 － aux. stop valve
1 － drain valve of double shut type
1 － manhole
1 － pressure gauge

7.4 EMERGENCY AIR RESERVOIR

The emergency air reservoir shall be made of cylindrical welded steel construction.

The fittings and accessories shall be as follows:

1 － safety valve
1 － charging valve
1 － stop valve
1 － pressure gauge

7.5 ENGINE ROOM VENTILATING FAN

The engine room ventilating fan shall be of motor driven vertical axial flow split type and motor shall be incorporated in the fan casing.

At the reverse rotation, the capacity and head shall reduced.

The materials shall be as follows:

Casing	Steel plate
Impeller	Aluminum alloy

SECTION 8 HEAT EXCHANGER

8.1 COOLER AND CONDENSER

8.1.1 Shell and tube type heat exchanger

One (1) auxiliary condenser shall have a sufficient capacity to condense excess steam from the exhaust gas section of aux. boiler.

This heat exchanger shall be of horizontal shell and tube type. Tube shall be straight, and tube end of sea water inlet side shall be expanded into tube plates.

The materials shall be as follows:

Shell	Steel plate or steel pipe
Shell cover	Cast iron (inside epoxy paint)
Tube plate	Naval brass
Tube	Aluminum brass

The fittings and accessories shall be as follows:

4 － thermometers (3 － for condenser)
1 － compound gauge for condenser
1 － peep hole for shell except small size cooler
Necessary number － air cock and drain cock for shell and shell cover
1 － set of protecting anode (Zn) for each water chest of sea water
1 － set of chemical clean. flange for both tube and shell side except small size cooler

8.1.2 Plate type heat exchanger

Each one (1) set of jacket cool. F.W. cooler and main L.O. cooler respectively shall have a sufficient capacity to meet max. output requirement of main engine.
Two (2) sets of D/G cool. F.W. cooler shall have a sufficient capacity to meet max. output requirement of three (3) sets of main diesel generator engine and two (2) sets of main air compressor.

The materials shall be as follows:

Frame plate	Mild steel
Plate	Titanium (in case of sea water cooling)
	Stainless steel (in case of fresh water cooling)

The heat exchangers attached to main engine, main diesel generator engines and other machinery shall be in accordance with Maker's standard.
The design conditions for heat exchangers shall be as following table.

HEAT EXCHANGER CALCULATION SHEET

SHELL AND TUBE TYPE HEAT EXCHANGER

Name	Design condition						
	Tube side (S.W.)			Shell side			Clean. factor (%)
	Quantity (m^3/h)	Temperature (℃)		Quantity (m^3/h)	Temperature (℃)		
		Inlet	Outlet		Inlet	Outlet	
Aux. condenser	40	32	49.2	1,100 kg/h	100	60	85

Remarks :
1) Out diameter of tube shall be 16 mm and thickness shall be 1.0 mm.
2) As a result of particular calculation, above said value may be altered.

PLATE TYPE HEAT EXCHANGER

Name	Design condition						
	Cold side			Hot side			Clean. factor (%)
	Quantity (m^3/h)	Temperature (℃)		Quantity (m^3/h)	Temperature (℃)		
		Inlet	Outlet		Inlet	Outlet	
Main lub. oil cooler	(S.W.) 160	32.0	36.6	(L.O.) 220	52.9	45.0	85
Jacket cooling F.W. cooler	(S.W.) 160	36.6	43.8	(F.W.) 102	90.0	79.0	85
D/G cool. F.W. cooler	(S.W.) 54	32.0	41.8	(F.W.) 48.2	48.5	38.0	85
MGO cooling F.W. cooler	(S.W.) 5.0	32.0	36.5	(F.W.) 5.0	40.4	36.0	85
M/E MGO cooler	(F.W.) 4.0	36.0	40.0	(MGO) 4.2	50.0	40.0	85
D/G MGO cooler	(F.W.) 1.0	36.0	41.7	(MGO) 1.5	50.0	40.0	85

Remarks :
1) As a result of particular calculation, above said value may be altered.

8.2 OIL HEATER

There shall be provided one (1) main engine fuel oil heater, two (2) purifier fuel oil heaters, one (1) purifier lub. oil heater, one (1) diesel gene. purifier lub. oil heater, one (1) diesel gene. fuel oil heater and one (1) shifter fuel oil heater.

Boiler fuel oil heater shall be in accordance with Maker's standard.

The design conditions for there heaters shall be as following table.

Name	Design condition			Heating steam press. (MPa)
	Quantity (Lit/h)	Temperature (℃)		
		Inlet	Outlet	
Main engine F.O. heater	4,200	105	140	0.55
Purifier F.O. heater	2,100	55	98	0.55
Purifier L.O. heater	2,100	45	90	0.55
Diesel gene. F.O. heater	1,600	105	140	0.55
Shifter F.O. heater	3,400	55	85	0.55
D/G purifier L.O. heater	600	45	90	0.55

The materials of oil heaters shall be as follows:

Shell	Steel tube
Tube	Steel tube with rod or coil tube

The fittings and accessories shall be as follows:

1 － drain plug
1 － air vent cock
1 － relief valve
2 － thermometer

SECTION 9　FRESH WATER GENERATOR

9.1 GENERAL

There shall be installed one fresh water generator, utilizing the waste heat in the jacket water from the main engine.

The fresh water generator shall produce fresh water of salinity not exceeding 10 P.P.M of salt at abt. 90℃ main engine jacket water temperature and 32℃ cooling sea water temperature.

The distilling cycle shall be as follows:

Jacket water from the main engine cooling F.W. outlet shall be led to the evaporator.
Sea water branched from condenser cooling sea water outlet shall be led to the evaporator and heated by the fresh water from the main engine cooling system.

Sea water shall be evaporated in separator shell at a comparatively low temperature due to the vacuum produced by means of the water ejector.

The vapour shall be led into the condenser through the deflector and demister and then condensed by the cooling sea water.
The brine, concentrated sea water, shall be constantly taken out from the evaporator and discharged to over board.

The ejector pump shall supply sea water to water ejector.　The distillate pump shall take the fresh water produce from the condenser of the fresh water generator and transfer it to the fresh water tank.

9.2 FITTING AND ACCESSORY

1 － ejector
1 － set of distillate pump
1 － set of ejector pump
1 － set of salinity alarm device
1 － solenoid valve
1 － vacuum gauge
1 － set of pressure gauge
1 － flow meter
1 － chemical injection unit
Other necessary fittings

The construction and materials shall be in accordance with Maker’s standard.

SECTION 10 PIPING GENERAL

10.1 GENERAL

Consideration shall be given in design so that the piping shall be led as directly as practicable with a minimum of bends.

Care shall be taken to avoid as far as possible pockets in pipe lines. Where pockets do occur, they shall be fitted with bosses having valves or screwed plugs or other means for draining if necessary. The drain plugs shall not be fitted in way of cofferdams or voids. The lines which necessitate draining frequently shall be fitted with valves or traps, or both.

The radius of bends in steel pipe shall be about two times the nominal diameter except for bend elbow. But in case it is difficult to make good piping arrangement with two times, bend elbow may be used. Welding fittings may be employed in place of pipe bends.

In case that the bend elbows are used, the radius of bends shall be one or one and half times of nominal diameter.

The system shall be designed to allow for all stresses due to thermal expansions and deflections of ship's structure.
Except where otherwise noted, expansion shall be compensated by using bends.
Expansion joints in exhaust gas pipes shall be of bellows type.

The pipes shall be supported suitably against excessive vibration.

The oil piping shall be kept as far as away from hot surface as practicable. The pipe shall, as far as possible, not be arranged directly above or in front of or behind the switch board. If unavoidable, suitable protection shall be provided.

Where piping passes through water or oil tight bulkheads and decks, the connection shall be made tight by means of three spool flanges or direct welded pipes.
Connections through insulated bulkheads shall be of sufficient length to permit access to flanged connection without disturbing the insulation.

The directly welded pipes shall be employed for piping penetrated through tank walls constructed with hull, such as sounding pipes, pump suction pipes and vent pipes.

Where galvanized piping is specified, the galvanizing shall be done after the pipe is fabricated and flanges are attached thereon in shop, except for screwed ends which may be attached after galvanizing.

Where it is impracticable or welding has destroyed galvanization the surface shall be touched up with coat of zinc rich paint.

Unions joints, screw joints or bite joints may be used for connecting the small pipes, valves and cocks.

After fabrication in shop for subsequent assembly, the lubricating oil pipes of main engine forced circulation system shall be pickled before installation. After fitting out onboard, they shall be cleaned by flushing with the lubricating oil which is prepared as system oil.

Packing used for all pipe lines, in general, shall be of multipurpose type or reinforced rubber sheet type.

10.2 SEA CHEST

The number of sea chest shall be kept to a minimum by combining the system.
The suction sea chest shall be of welded steel construction and fitted with sea valve of angle, globe and butterfly type.

The distance piece for overboard and sea suction connection shall be of extra heavy steel pipe or fabricated steel construction. The thickness of distance piece shall be determined according to the requirement of the Classification Society.

In general, suction sea chest shall be fitted with grid type strainer which shall be fabricated from flat steel bars and galvanized after fabrication. For small suction sea chest, perforated strainer plates of galvanized steel may be used.

Strainer grids or plates shall have a clear area not less than two times cross sectional area of the connected pipe, and shall be secured so that no part extends beyond the shell. The bolts or studs and nuts for securing strainer grid or plates shall be of stainless steel. The studs and nuts for securing sea valve shall be of stainless steel.

Steam blow valve with coupling and air vent shall be fitted to each suction sea chest.

10.3 VALVE AND COCK

In general, the valves and cocks of marine use which are specified in accordance with Japanese Industrial Standard (JIS) or equivalent standard shall be used except that the valves and cocks for control system which have special construction and shape shall be in accordance with Maker's standard.

Generally, globe and angle valve shall be used on engine room piping system, but as to fresh water and sea water lines of pipe diameter 80 mm and above, butterfly valve shall be adopted.

Pipe line	Material of valve body	Joint	Nominal
Bilge, ballast and sea water line 50 mm & above 40 mm & below	 Cast iron Bronze	Steel slip on welded flange or sleeve	5K STD
Fire line 50 mm & above 40 mm & below	 Cast iron Bronze	Steel slip on welded flange or sleeve	10K STD
Fresh, drinking and cooling F.W. line 50 mm & above 40 mm & below	 Cast iron Bronze	Steel slip on welded flange or sleeve	5K STD
M/E F.O. circulating pump discharge line 50 mm & above 40 mm & below	 Special cast iron Bronze	Steel slip on welded flange	16K STD
D/G F.O. circulating pump discharge line 50 mm & above 40 mm & below	 Special cast iron Bronze	Steel slip on welded flange	16K STD
F.O. and L.O. line 50 mm & above 40 mm & below	 Cast iron Bronze	Steel slip on welded flange or sleeve	5K STD
F.O. purified line 50 mm & above 40 mm & below	 Special cast iron Bronze	Steel slip on welded flange or sleeve	5K STD

Pipe line	Material of valve body	Joint	Nominal
Steam (0.7MPa) line 50 mm & above 40 mm & below	 Cast iron Bronze	Steel slip on welded flange or sleeve (Note:4)	10K STD
Steam (0.4MPa) line 50 mm & above 40 mm & below	 Cast iron Bronze	Steel slip on welded flange or sleeve	5K STD
Feed water line	Bronze	Steel slip on welded flange	16K STD
Compressed air (2.9MPa) line 32 mm & above 25 mm & below	 Cast steel Forged steel	Steel slip on welded flange	20K STD
Compressed air (0.8MPa) line	Bronze	Steel slip on welded flange or sleeve	10K STD

Note :

1) Valves on hull construction of 40 mm bore and below shall be of cast bronze and those of 50 mm and above shall be of cast steel.

2) Main suction valves fitted on outside walls of fuel oil and lub. oil tanks except double bottom tanks shall be of special cast iron except those of 40 mm bore and below of cast bronze.

3) Valves and pipe fittings in the piping system of group Ⅱ except steam line shall be of casting with on elongation of 12% and over.

4) Sleeve welded joint is not to be used for steel pipes having a nominal diameter for more than 80A for steam line.

5) Mechanical joints shall be of NK-approved type and the construction and type shall be in accordance with Table D12.8 and Table D12.9 (12.3.3, Part D of the Rules).

10.4 PIPING SCHEDULE

(1) LIST OF MATERIAL (PIPE LIST)

Pipe line	Kind of pipe	Design		Test pressure		Remarks
		Press (MPa)	Temp. (℃)	Shop (MPa)	After inst.	
Bilge line 65 mm & above 50 mm & below	STPG370E (Sch.40) (Sch.80)	0.32	Ambi-ence	-	Work. Cond.	To be galvanized
Ballast line 65 mm & above 50 mm & below	STPG370E (Sch.40) (Sch.80)	0.30	Ambi-ence	-	Work. Cond.	To be galvanized
Fire line 65 mm & above 50 mm & below	STPG370E (Sch.40) (Sch.80)	0.75	Ambi-ence	-	Work. Cond.	To be galvanized
Cooling S.W. & S.W. service line 65 mm & above 50 mm & below	STPG370E (Sch.40) (Sch.80)	0.45	Below 55	-	Work. Cond.	To be galvanized
Cooling F.W. line 125 mm & above 100 mm & below	SGP-E SGP-B	0.45	92	-	Work. Cond.	To be pickled
F.O. sett. tank to F.O. purifier	STPG370E (Sch.40)	0.30	60	-	0.45	To be pickled & to be insulated
F.O. puri. to tank		0.30	98	0.45	0.45	
Tank to F.O.boost.P		0.30	90	0.45	0.45	
F.O. boost. pump to M/E F.O. circ.pump		0.40	140	0.60	0.60	
M/E F.O. circ. pump to main engine	KSTPG38E (Sch.40)	1.40	140	2.10	2.10	
Main engine to mix. tube	STPG370E (Sch.40)	0.40	140	0.60	0.60	
D/G F.O. circ. pump to diesel generator	KSTPG38E (Sch.40)	1.40	140	2.10	2.10	
Boiler F.O. serv. line	STPG370E (Sch.40)	0.30	98	0.45	0.45	
Boiler F.O. burning pump to burner	KSTPG38E (Sch.40)	1.80	130	2.70	2.70	
F.O. transfer line 125 mm & above 100 mm & below	SGP-E SGP-B	0.32	50	-	0.48	-
L.O. line 125 mm & above 100 mm & below	SGP-E SGP-B	0.42	55	-	Work. Cond.	To be pick. (except trans. line)
L.O. purified line 125 mm & above 100 mm & below	SGP-E SGP-B	0.35	90	0.53	Work. Cond.	To be pickled

Pipe line		Kind of pipe	Design Press (MPa)	Design Temp. (℃)	Test pressure Shop (MPa)	Test pressure After inst.	Remarks
Steam line		SGP-B	0.80	175	1.20	Work. Cond.	To be insulated
			0.45	155	0.68		
Boiler blow line		STPG370E (Sch.40)	1.00	175	1.50	Work. Cond.	To be insulated
Tank heating pipe (In engine room)		STPG370E (Sch.40)	0.8	175	1.20	1.2	-
Exh. steam & drain		SGP-B	Below 0.10	Below 100	-	Work. Cond.	To be insulated
Compressed air line		KSTPG38E (Sch.40)	2.99	Ambi-ence	4.49	Work. Cond.	To be galvanized for main pipe
		SGP-B	0.90	Ambi-ence	1.35		
Feed water line	Suc. line	SGP-B	Below 0.10	60	-	Work. Cond.	-
	Dis. line	STPG370E (Sch.40)	1.10	60	1.65		
Drinking water line		SUS304-A (Sch.20S)	0.55	Ambi-ence	-	Work. Cond.	-
Fresh water service line		SGP-B	0.55	Ambi-ence	-	Work. Cond.	To be galvanized
F.W. gene. distillate water line		SUS304-A (Sch.20S)	-	-	-	Work. Cond.	-
Gauge pipe line		Copper	-	-	-	Work. Cond.	-
Oily drain, deck scupper & open ended pipe		SGP-B	-	-	-	-	-
Exhaust gas pipe		SGP-E STPY-400 SS400	-	-	-	-	-

Pipe line	Bore	Kind of pipe	Remarks
Overflow pipe, sounding pipe and vent. pipe fitted to the hull constructed tank	40mm, 50mm 65mm & above	STPG370E (Sch.80) SGP	-

(2) THICKNESS OF STEEL PIPE

Unit : mm

Nominal diameter	Outside diameter	Steel pipe		SGP-E SGP-B
		Sch.40	Sch.80	
10	17.3	2.3	3.2	2.3
15	21.7	2.8	3.7	2.8
20	27.2	2.9	3.9	2.8
25	34.0	3.4	4.5	3.2
32	42.7	3.6	4.9	3.5
40	48.6	3.7	5.1	3.5
50	60.5	3.9	5.5	3.8
65	76.3	5.2	7.0	4.2
80	89.1	5.5	7.6	4.2
100	114.3	6.0	8.6	4.5
125	139.8	6.6	9.5	4.5
150	165.2	7.1	11.0	5.0
200	216.3	8.2	12.7	5.8
250	267.4	9.3	*12.7	6.6
300	318.5	*9.5	*12.7	6.9
350	355.6	*9.5	*12.7	7.9
400	406.4	*9.5	*12.7	7.9

Unit : mm

Exhaust gas pipe			Thickness of copper pipe	
Nominal dia.	Thickness	Material	Outside dia.	Thickness
650 & above	6.0	SS 400	6	1.0
400 to 600	6.4	STPY-400	10	1.0
350 & below	-	SGP-E	12	1.2
			16	1.2

Note :

1) 10 mm and below pipes in nominal diameter shall be of seamless copper pipe.

2) STPY-400 shall be adopted for marked * size pipe.

3) The material of M/E exh. gas pipe above one (1) meter under the funnel top plate shall be anti-corrosive steel.

10.5 STRAINER

Line	Item	No.×Mesh Inlet	No.×Mesh Outlet	Remarks
Sea water line	Cool. S.W. pump	2× 8 mm	-	Simplex type The element to be stainless, and inner surface to be of epoxy paint
	Ref. mach. cool. S.W. pump	1× 8 mm	-	
	Main L.O. cooler	1× abt. 4 mm		Inner strainer (Maker supply)
	D/G low temp. F.W. cooler	2× abt. 4 mm		
Bilge & ballast line	Bilge & ballast pump	1× 8 mm	-	Simplex type The element to be stainless, and inner surface to be of epoxy paint
	Fire & G.S. pump	1× 8 mm	-	
	Ballast pump	2× 8 mm	-	
	Bilge pump	1×32	-	Simplex type
	Sludge pump	1×10	-	
	Bilge separator	1×100	-	
Fresh water line	Drinking water tank	-	1×10 mm	Rose box
	Fresh water tank	-	1×10 mm	
Drain line	Drain trap	Each 1	-	Y type strainer
Steam line	Reducing valve & temp. cont. valve (direct type)	Each 1	-	Y type strainer

Line	Item	No.×Mesh Inlet	No.×Mesh Outlet	Remarks
Fuel oil line	F.O. transfer pump	1× 16	-	Simplex
	D.O. transfer pump	1× 16	-	Simplex
	F.O. purifier	1× 60	-	Duplex (F.O. side)
		1× 60	-	Simplex (D.O. side)
	F.O. booster pump	1×100	-	Duplex
	Main engine F.O. circ. pump	-	1× ABS.50 μ	Auto. back wash with by-pass filter (Maker supply)
	Diesel generator D.O. booster pump	1×100	-	Duplex
	Diesel generator F.O. circ. pump	-	1× E.F.10 μ	Auto. back wash with by-pass line
		-	3× ABS.75 μ	Notch wire (Maker supply)
	Boiler F.O. pump	1×100	-	Simplex (Maker supply)
	F.O. shifter pump	1× 32	-	Duplex
	Waste oil incinerator	1× 60	-	Simplex
Lub. oil line	L.O. transfer pump	1× 32	-	Simplex
	Stern tube L.O. pump	2× 60	-	Simplex with magnet
	L.O. purifier	1× 60	-	Duplex
	Main engine L.O. pump	-	1× ABS.40 μ	Manual back wash
	Sludge collector	1×150	-	(Maker supply)
	Cylinder lubricator	1	-	Y type strainer (Maker supply)
	Diesel generator L.O. pump	3	-	Simplex (Maker supply)
		-	3× ABS.30 μ	Continuous back wash (Maker supply)

10.6 SEA WATER DISTRIBUTION CHART

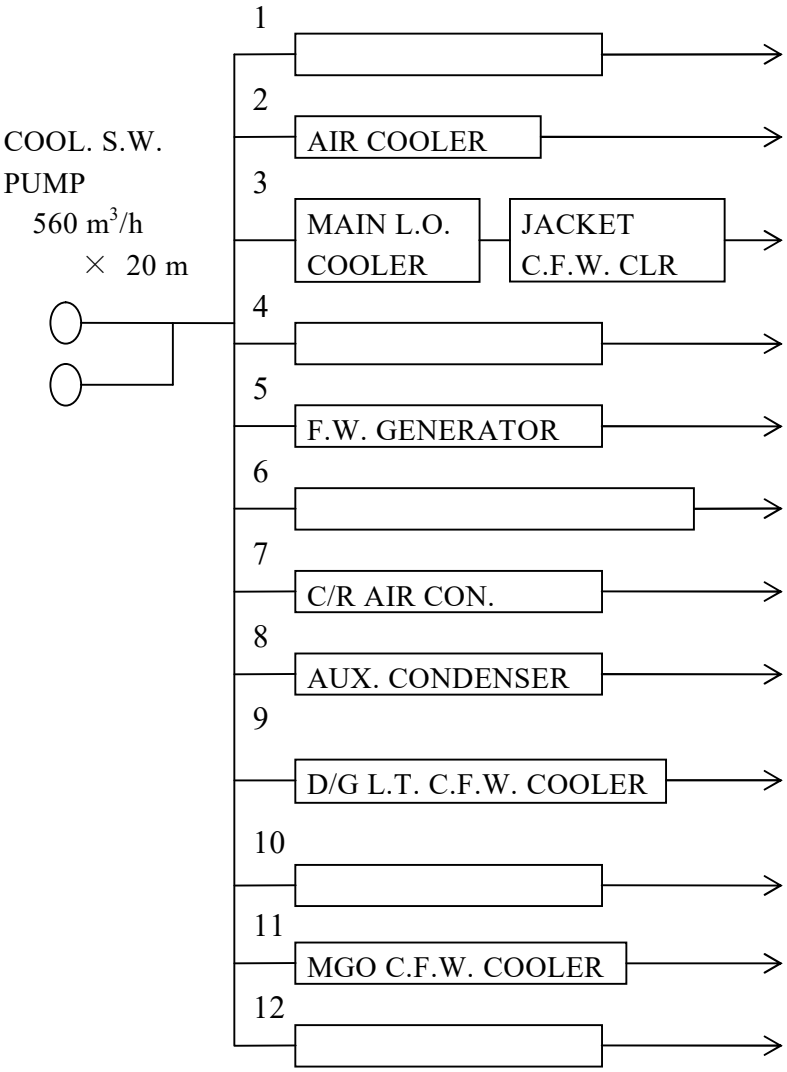

COOL. S.W. PUMP

No.	Flow quantity (m^3/h)			
	Sea going	Port in/out	At port	Load-ing
1	-	-	-	-
2	160	160	0	0
3	160	160	0	0
4	-	-	-	-
5	34	0	0	0
6	-	-	-	-
7	5	5	5	5
8	40	40	40	40
9	108	108	108	108
10	-	-	-	-
11	5	5	5	5
12	-	-	-	-
sum	512	478	158	158

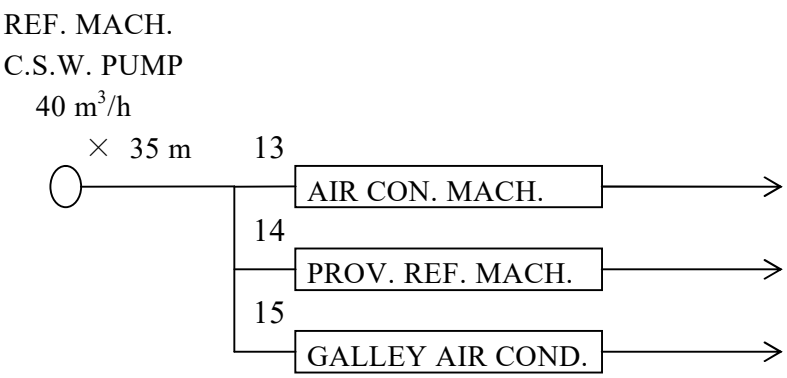

REF. MACH. C.S.W. PUMP

No.	Flow quantity (m^3/h)			
	Sea going	Port in/out	At port	Load-ing
13	21	21	21	21
14	7	7	7	7
15	7	7	7	7
sum	35	35	35	35

10.7 PIPING SYSTEM

Schematic diagrams of piping system shall be shown as follow.

FIG. 1	BILGE LINE	M10 - 12
FIG. 2	COOLING SEA WATER LINE	M10 - 13
FIG. 3a	COOLING FRESH WATER LINE	M10 – 14a
FIG. 3b	MGO COOLING FRESH WATER LINE	M10 – 14b
FIG. 4	FRESH WATER SERVICE LINE	M10 - 15
FIG. 5	FUEL OIL TRANSFER LINE	M10 - 16
FIG. 6	FUEL OIL PURIFYING LINE	M10 - 17
FIG. 7	M/E AND BOILER FUEL OIL SERVICE LINE	M10 - 18
FIG. 8	DIESEL GENERATOR FUEL OIL SERVICE LINE	M10 - 19
FIG. 9	LUB. OIL TRANSFER & FURIFYING LINE	M10 - 20
FIG. 10	LUB. OIL SERVICE LINE	M10 - 21
FIG. 11	STERN TUBE LUB. OIL LINE	M10 - 22
FIG. 12	STEAM LINE	M10 - 23
FIG. 13	COMPRESSED AIR LINE	M10 - 24
FIG. 14	EXHAUST GAS LINE	M10 - 25

FIG. 1 BILGE LINE

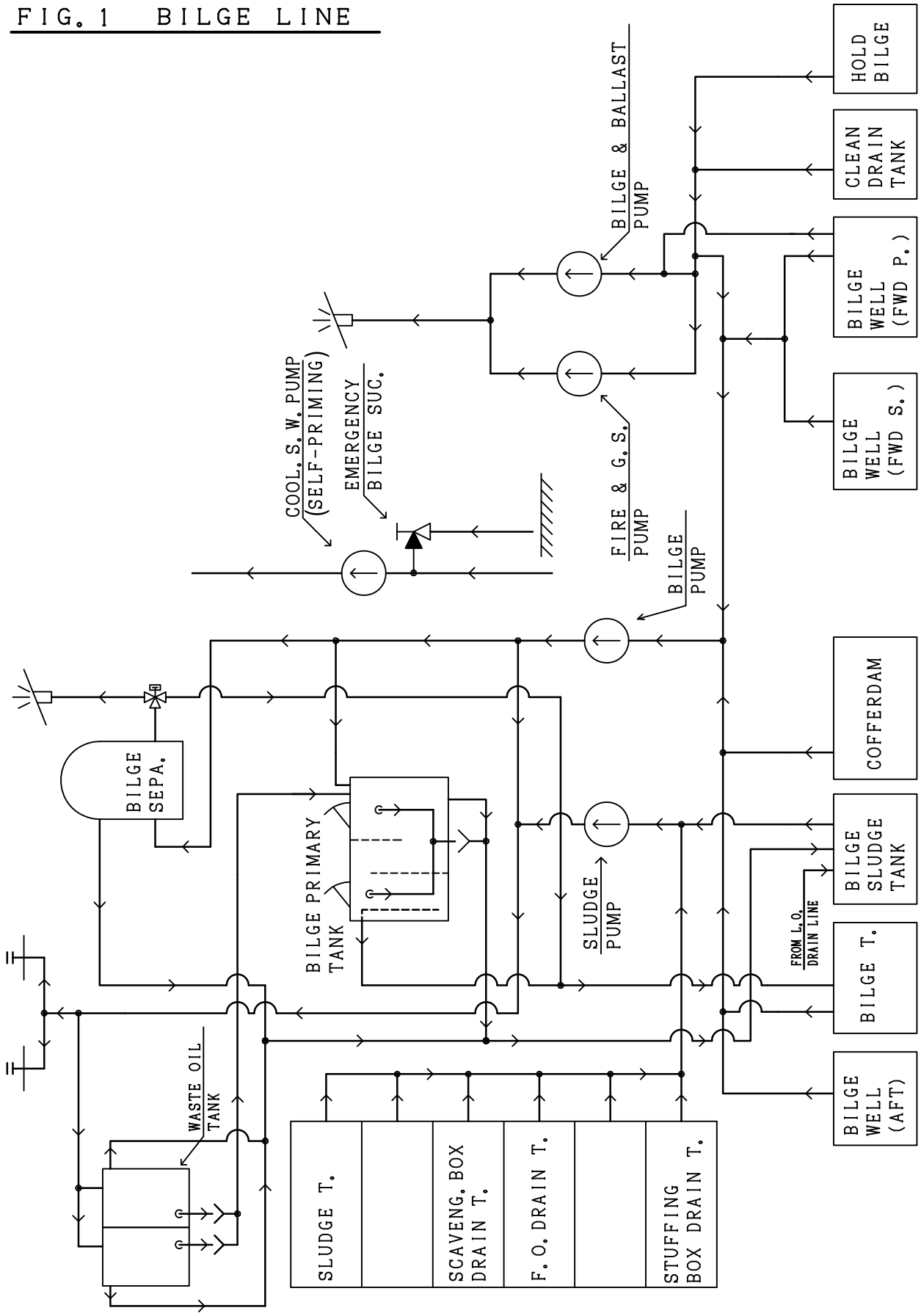

FIG. 2 COOL. S. W. LINE

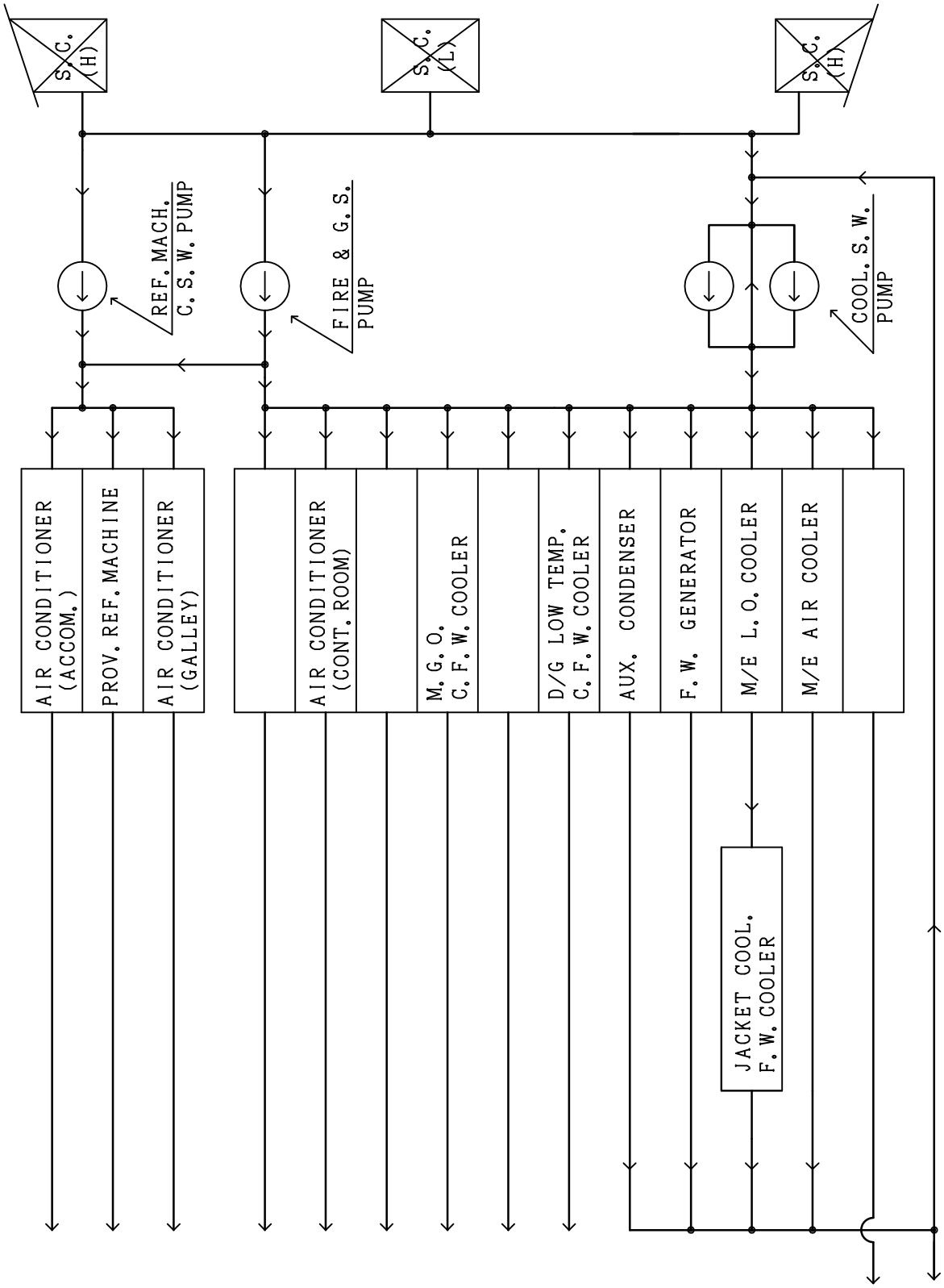

FIG. 3a COOL. F. W. LINE

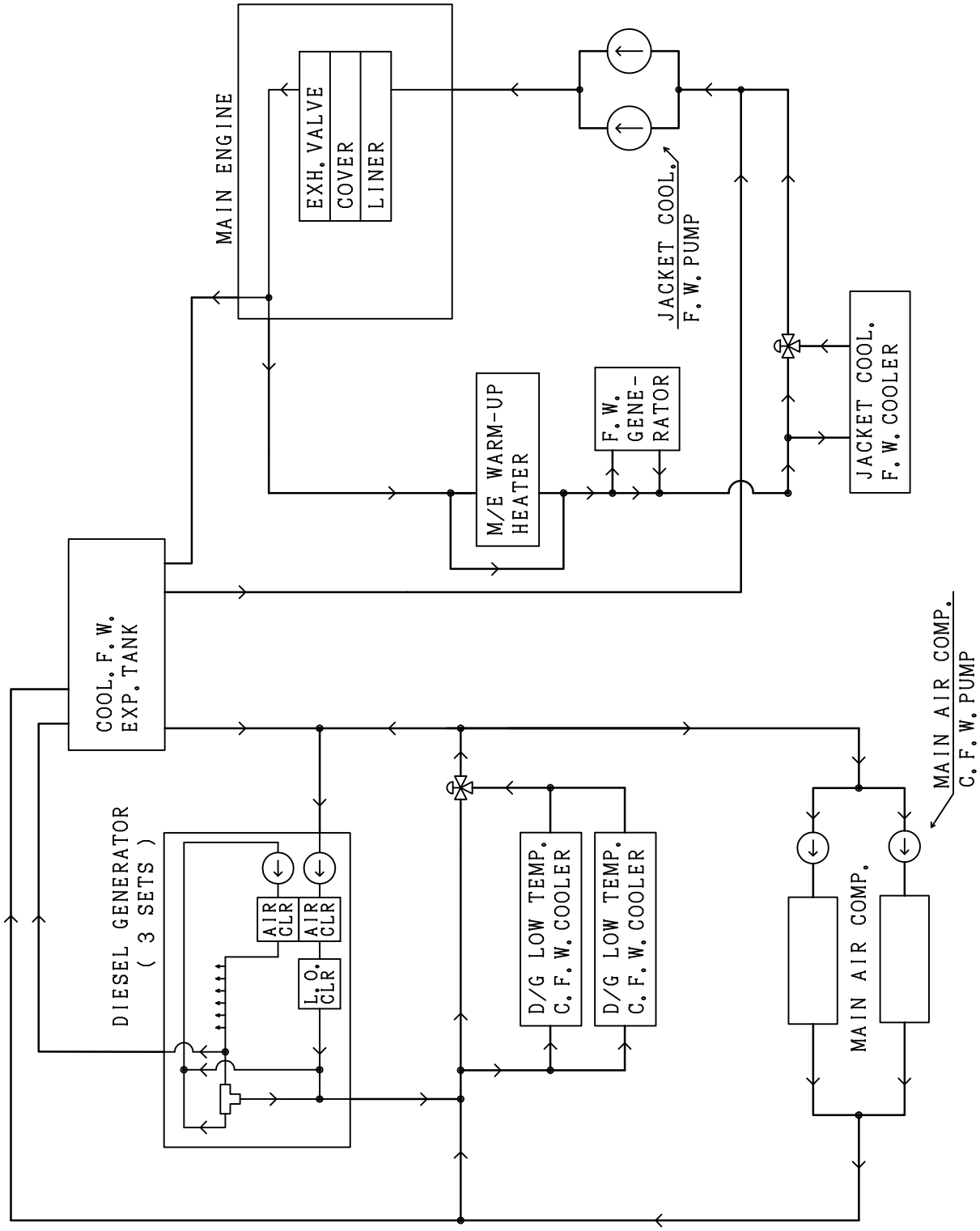

FIG. 3b M. G. O. COOL. F. W. LINE

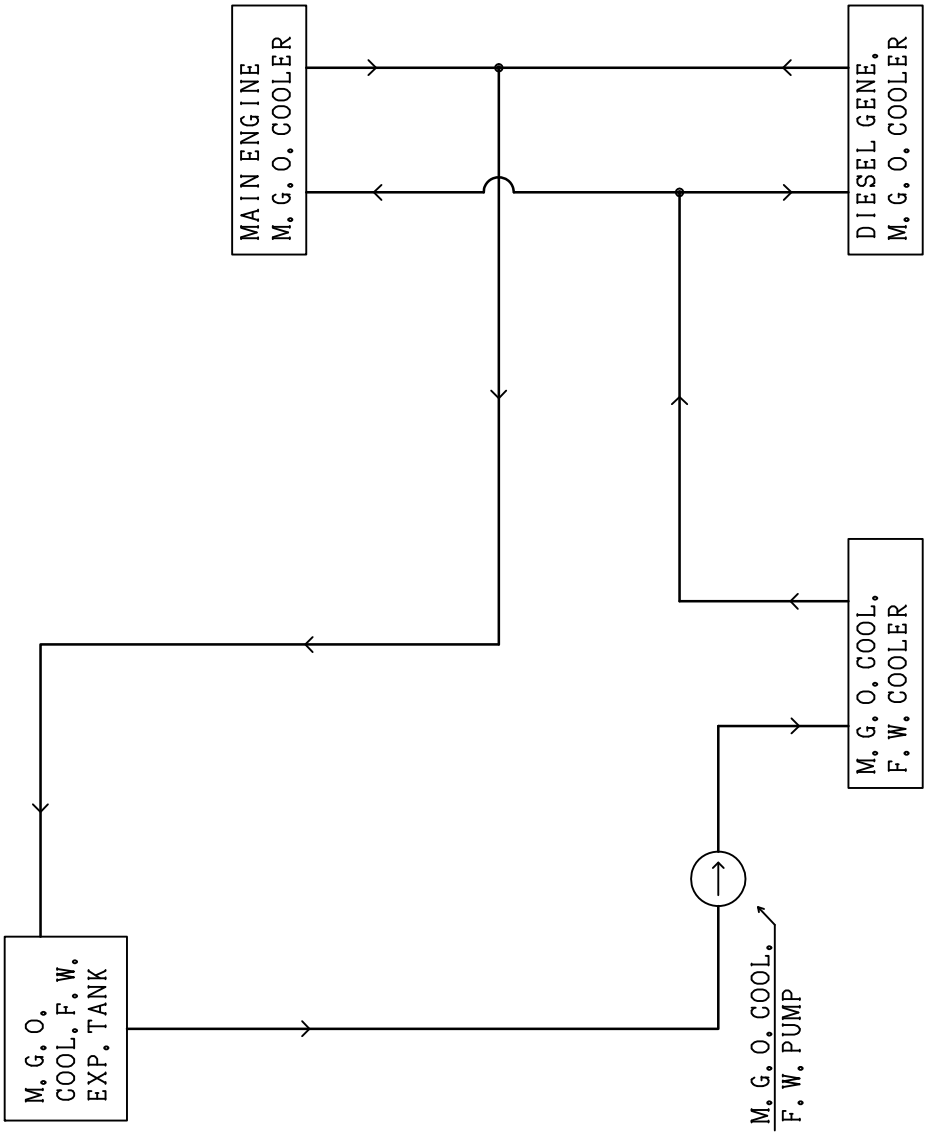

FIG. 4 FRESH W. SERVICE LINE

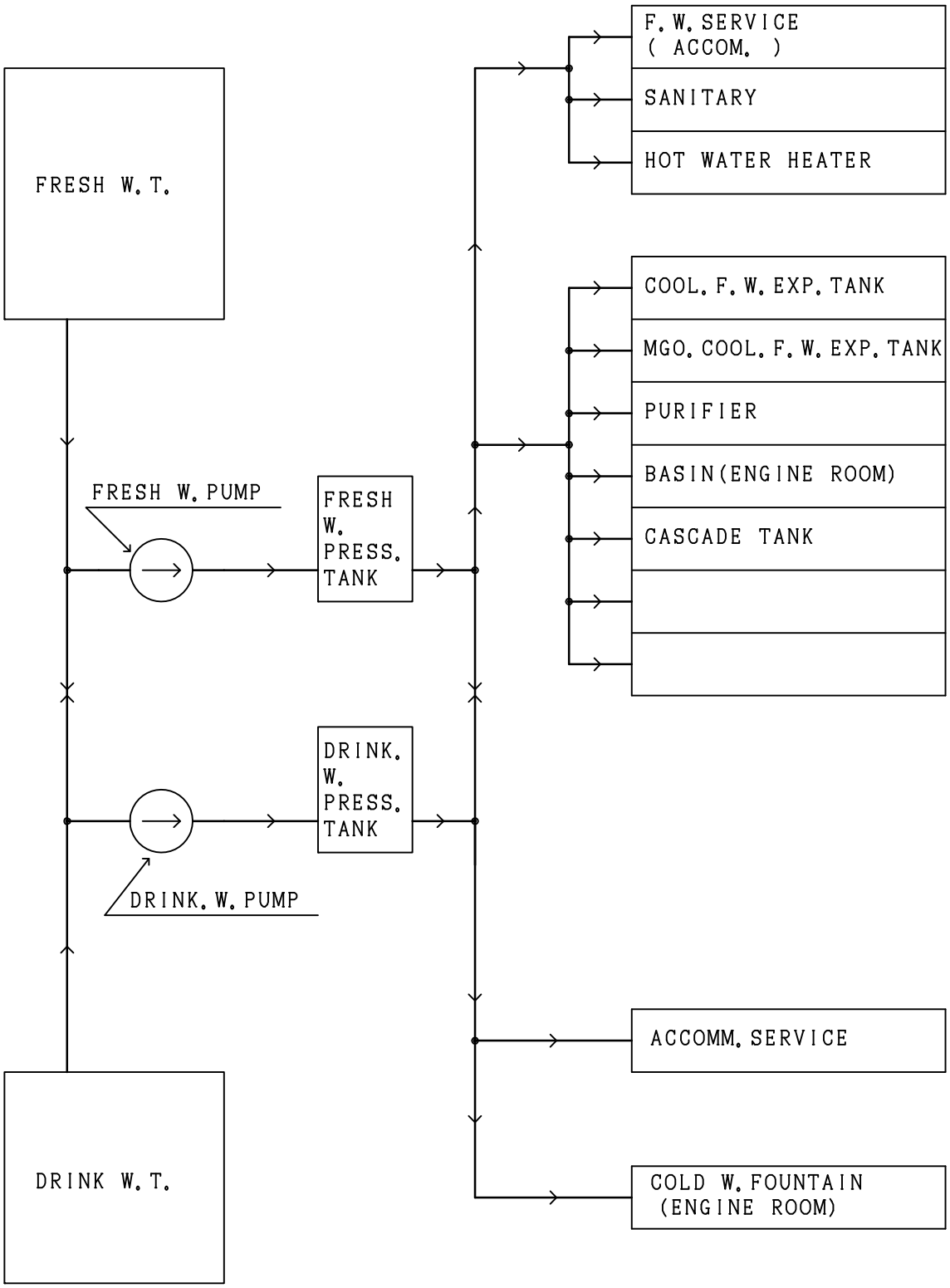

FIG. 5 F. O. TRANSFER LINE

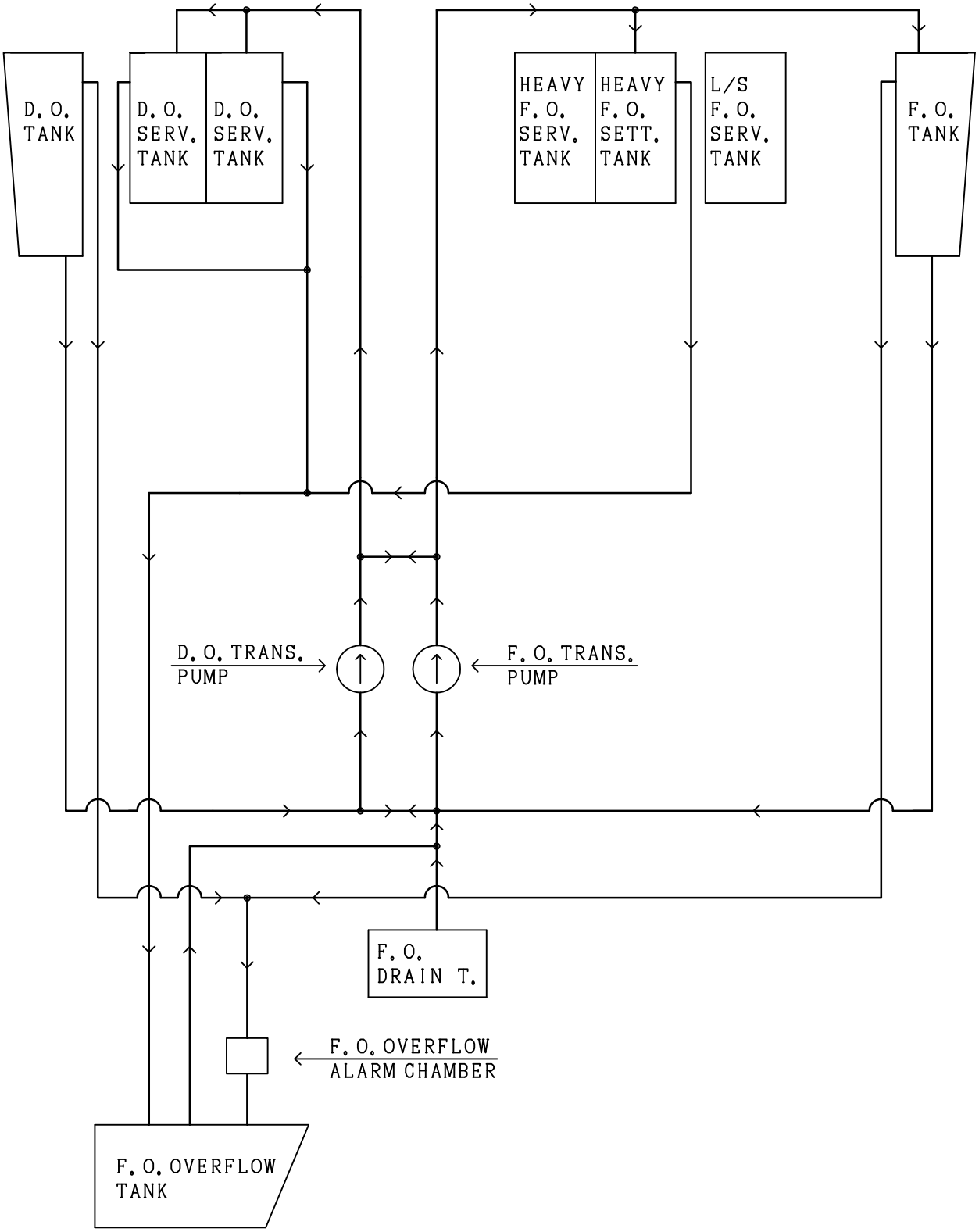

FIG. 6 F. O. PURIFYING LINE

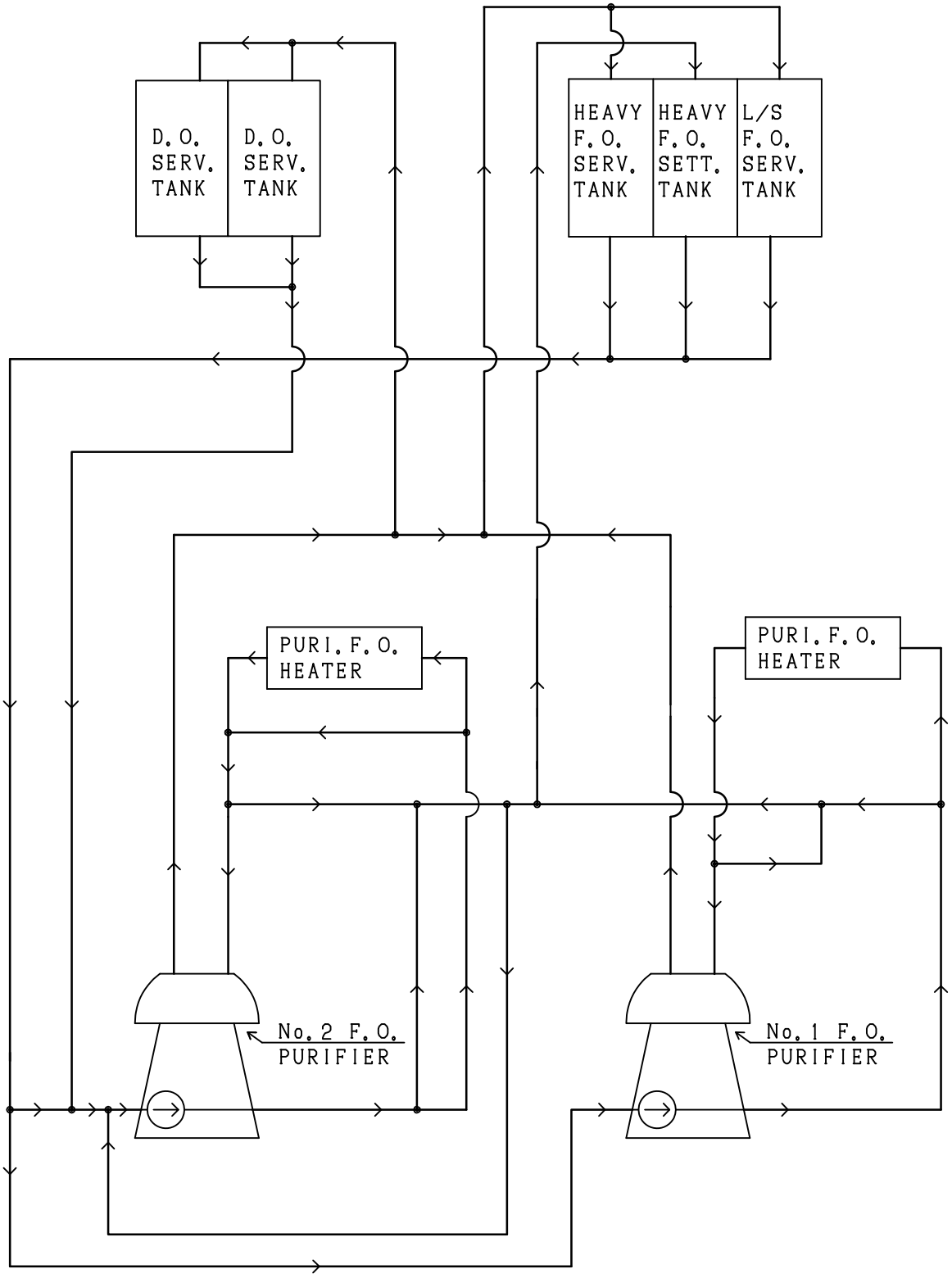

FIG. 7 M/E & BOILER F. O. SERVICE LINE

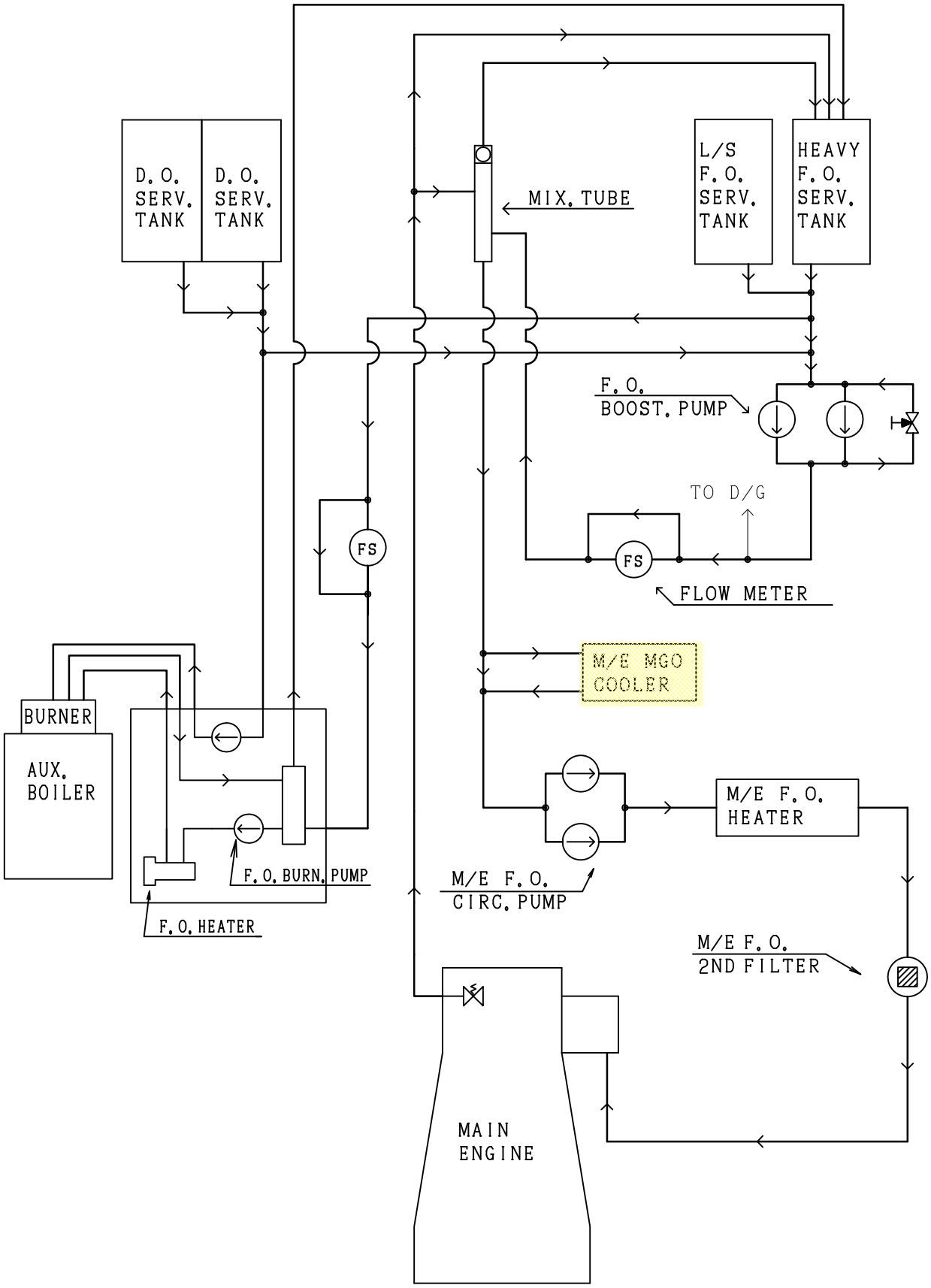

FIG. 8 D/G F. O. SERVICE LINE

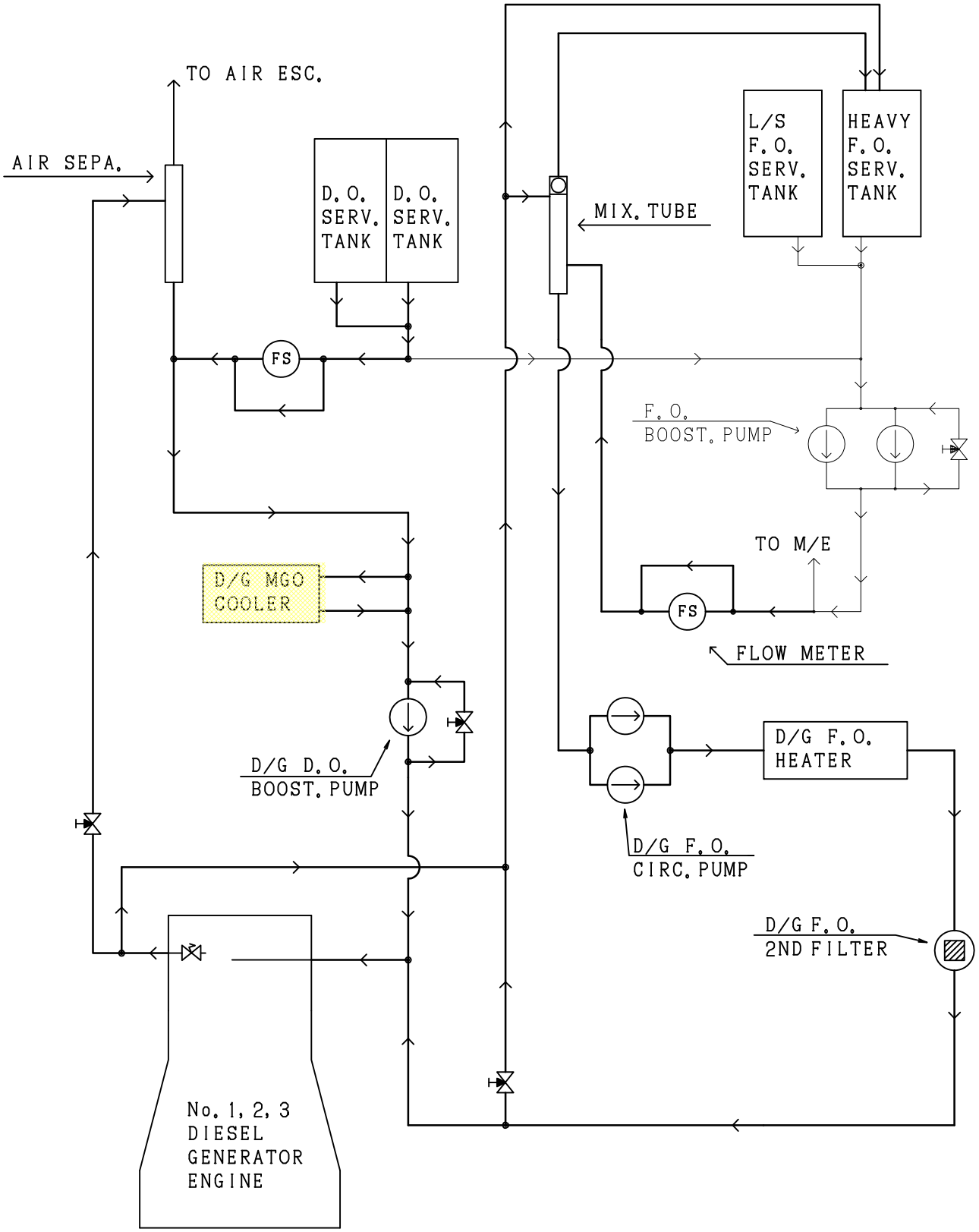

FIG. 9 L. O. TRANS. & PURI. LINE

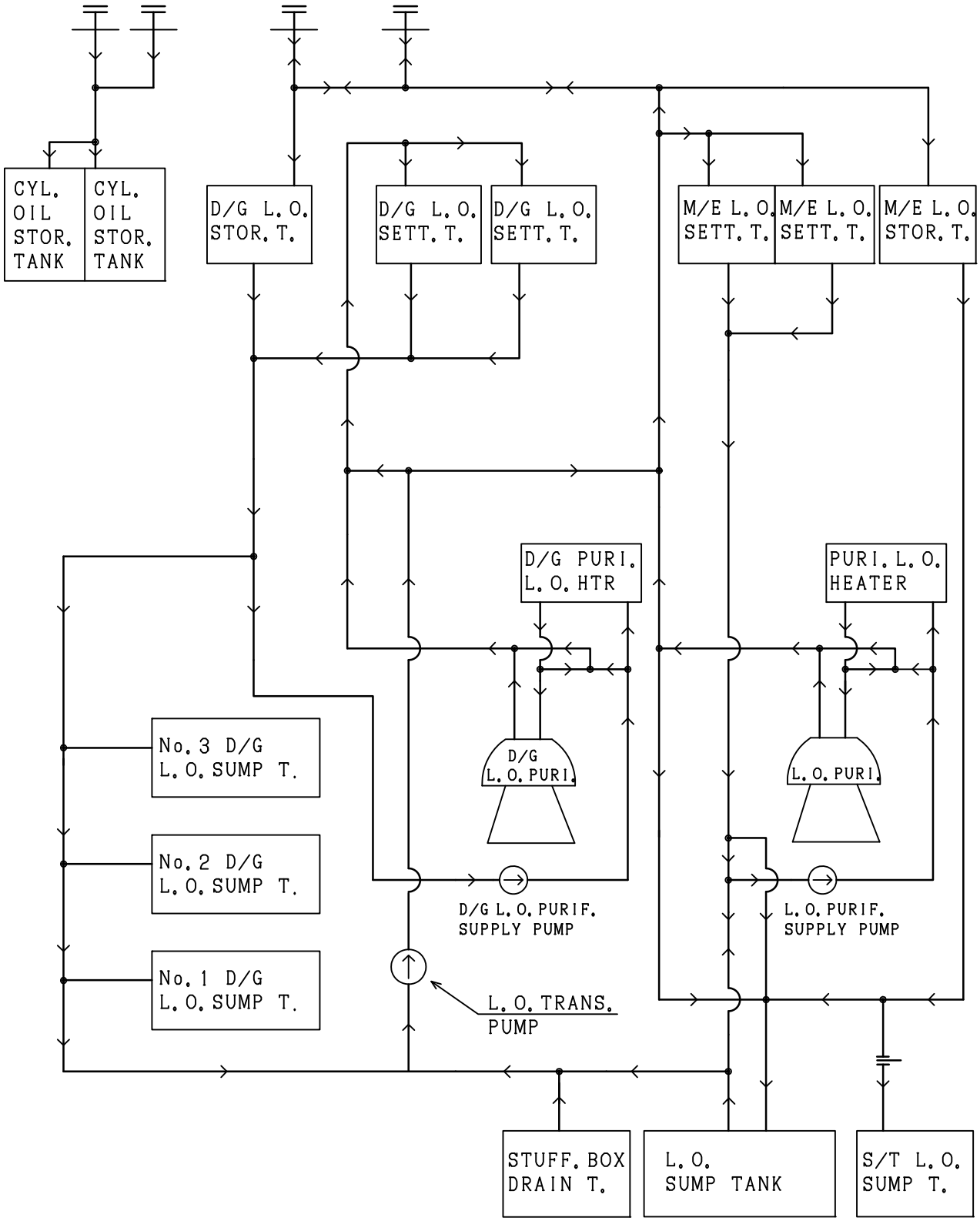

FIG. 10 L. O. SERVICE LINE

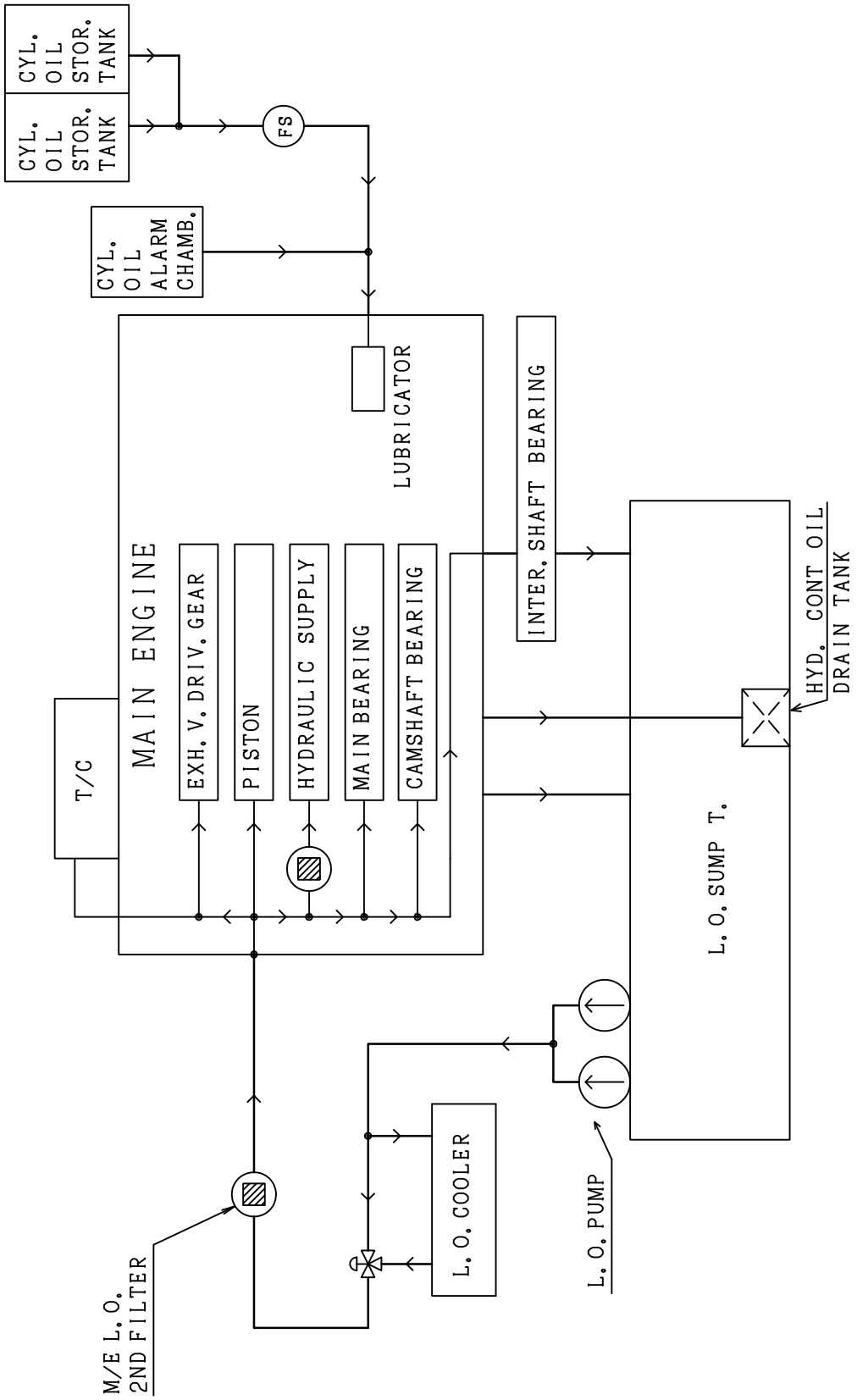

FIG. 11 STERN TUBE L. O. LINE

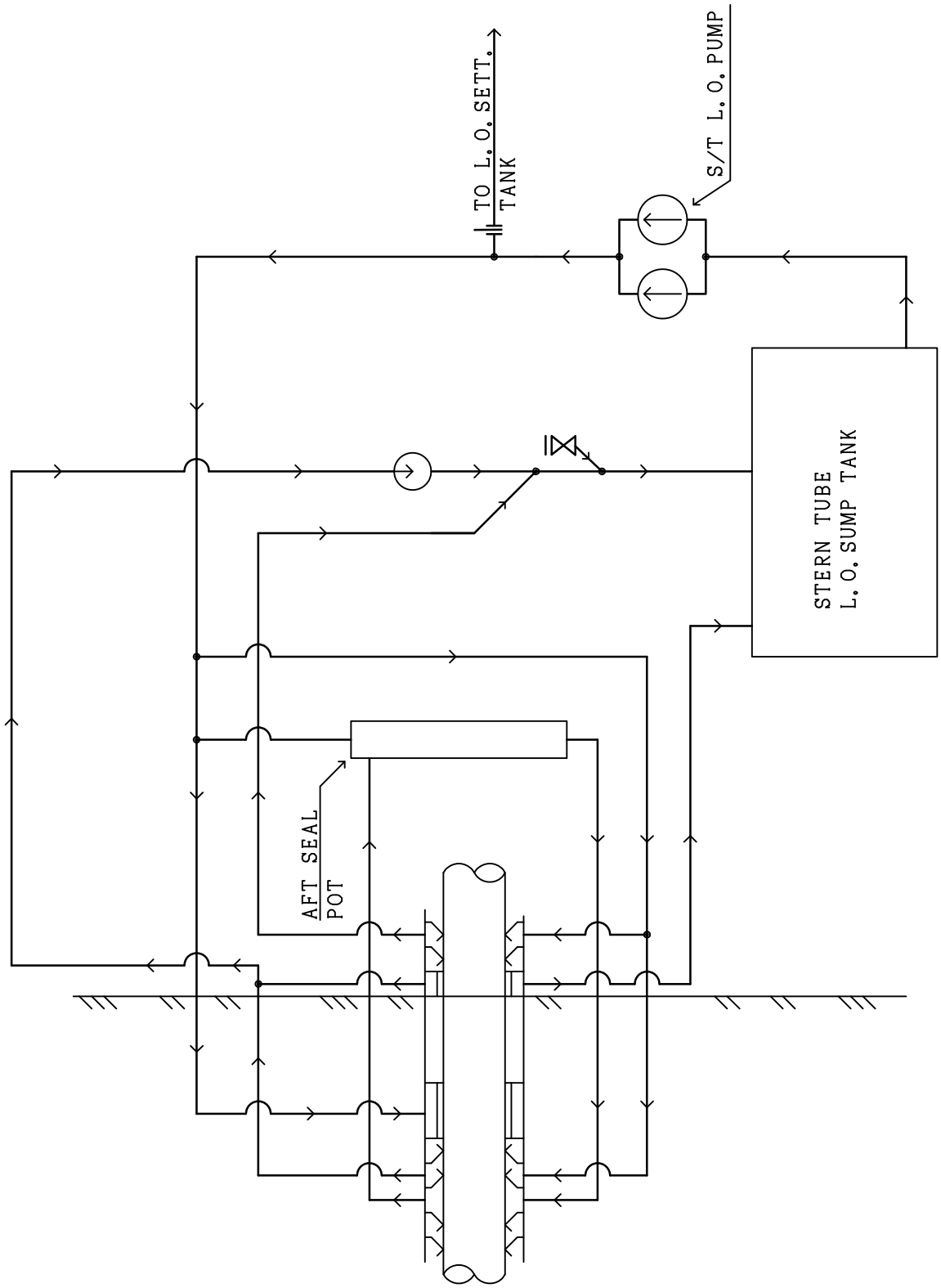

FIG. 12 STEAM LINE

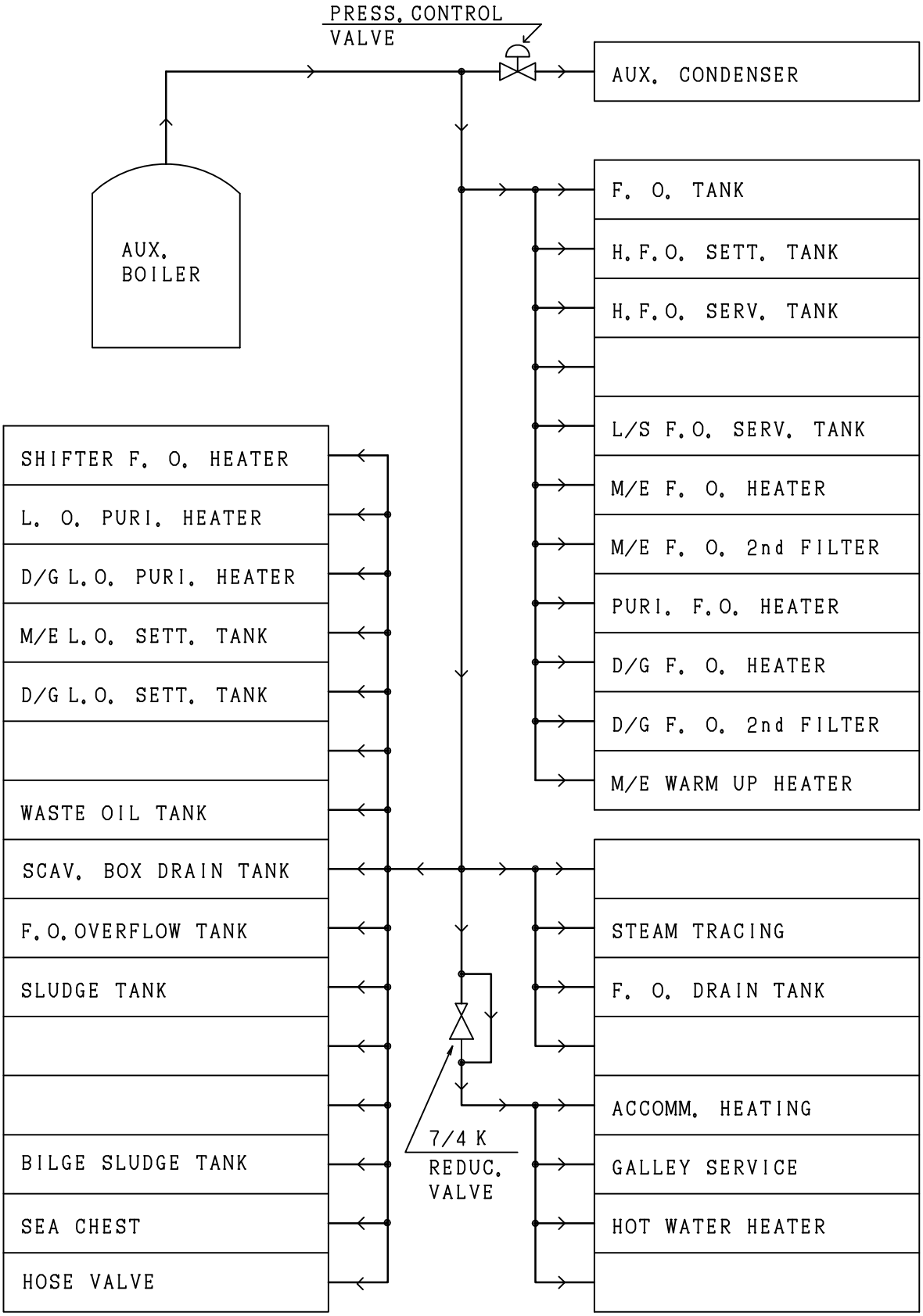

FIG. 13 COMPRESSED AIR LINE

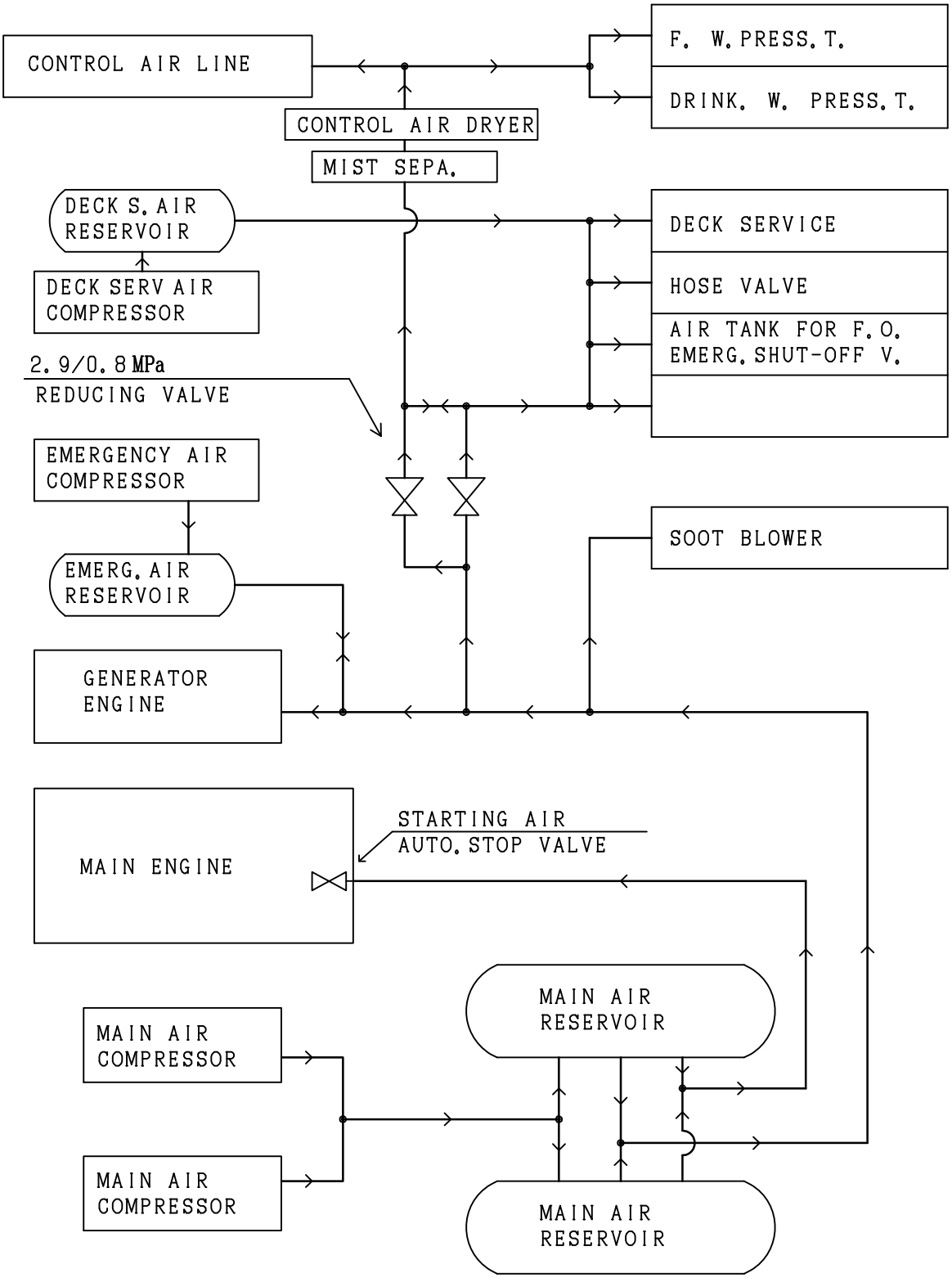

FIG. 14 EXH. GAS LINE

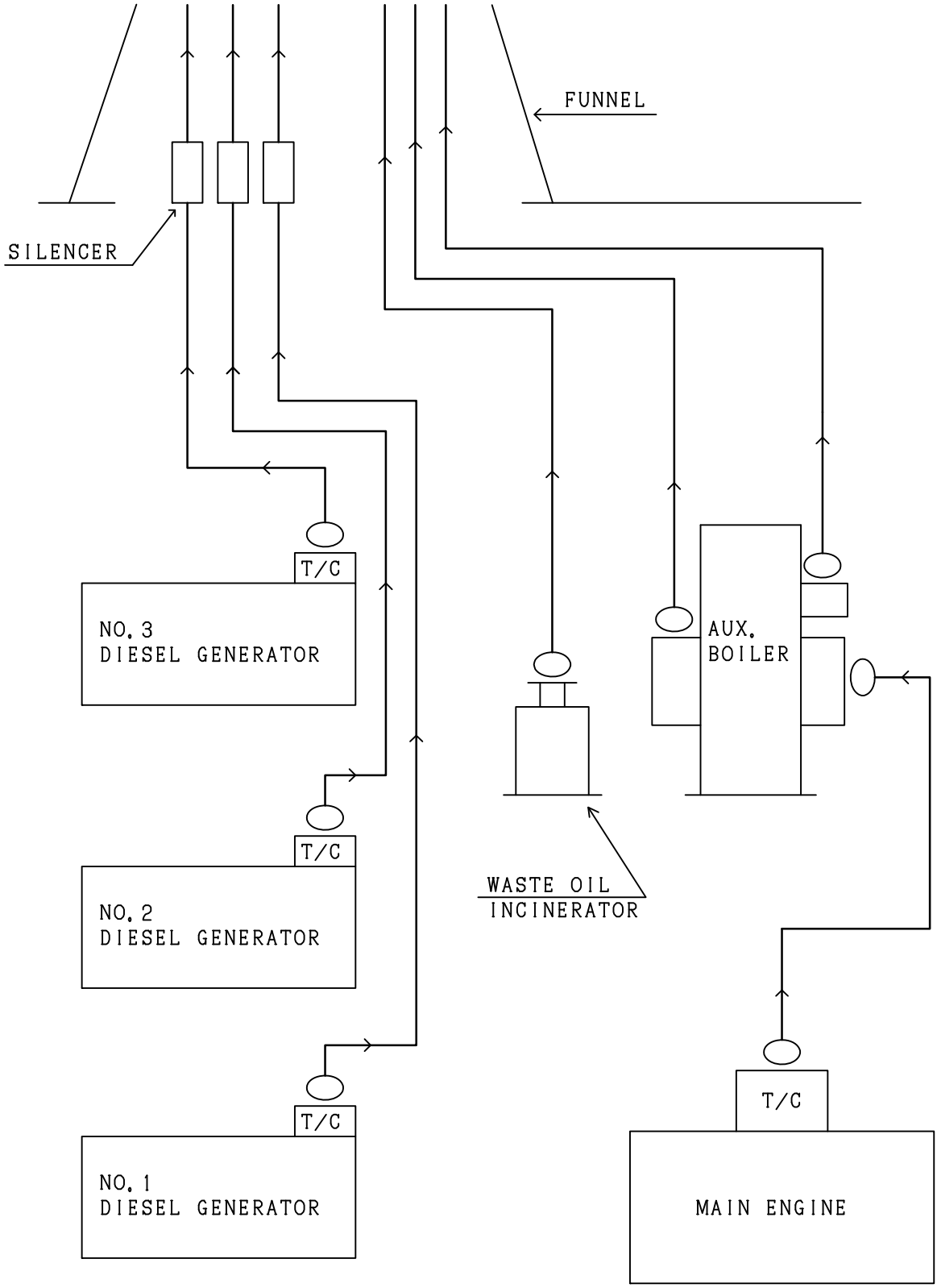

SECTION 11 INSULATION AND PAINTING

11.1 INSULATION

11.1.1 General

The external surface of the equipment and tanks which shall treat or contain the fluid having temperature above 55℃, except for the jacket cooling fresh water system, lub. oil system and boiler feed water line, shall be insulated as described below. Jacket cooling F.W. pipes in the location where people can easily touch shall be insulated.

The insulation materials such as glass wool, rock wool, etc. shall be suitably served according to the internal temperature of equipment and tanks concerned.

Where it is necessary to fit removable and replaceable insulation on flanges, valves, fittings, etc., glass wool mattress shall be used. Where glass wool mattress are used, they shall be secured with steel wires, steel bands and clips.

A-60 insulation shall be provided for engine room fore side bulkhead.

11.1.2 Application for equipment and tank

Main engine, main diesel generator engines, incinerator and aux. boiler shall be insulated according to Maker's standard.

Pumps, coolers, condenser and oil heaters shall not be insulated, however oil heaters shall be provided with metal cover for protection.

The external surface of under said tanks which are exposed to the engine room except rear wall and bottom of the tanks shall be insulated in accordance with the following table.

Tank	Insulation		Covering
	Material	Thickness in mm	
Heavy fuel oil settling tank Heavy fuel oil service tank L/S fuel oil service tank Waste oil tank	Glass wool or rock wool	25	Galvanized steel plate (abt. 0.2mm) or aluminized glass cloth

The tanks attached to machinery or equipment, insulation of which are required, shall be insulated in accordance with Maker's standard.
Other tanks shall not be insulated.

11.1.3 Application for piping

The materials and thickness of insulation for piping except for exhaust gas system, jacket cooling fresh water system and lub. oil system shall be in accordance with the following table.

Temperature range of internal fluid	Nominal pipe diameter in mm			Material
	Up to 20	25 to 150	200 & above	
	Thickness of insulation in mm			
Up to 100℃	6	20	20	Glass wool, glass mat or glass wool mattress
101℃ to 183℃	6	20	20	
184℃ and above	6	40	40	

The exposed parts of the following pipes which is a danger to the crew shall be insulated with glass cloth irrespective of pipe diameter and internal temperature.

・Boiler blow pipe
・Drain pipe after drain valves, drain traps and safety valves of aux. boiler.

The external surface of insulation material shall be covered with glass cloth or aluminum foil for protection.

The exhaust gas pipes after turbocharger of main engine, main generator diesel engines, incinerator and uptake of aux. boiler shall be insulated up to two (2) meters height from the funnel bottom in accordance with the following table and covered with galvanized steel plate.

Name	Material	Nominal pipe diameter in mm	Thickness of insulation in mm
Main engine Diesel gene. engine Aux. Boiler Incinerator	Rock wool	All sizes	50

In all cases where pipe insulation abut on flanges and fittings the end of insulation shall be suitably terminated to permit free removable of bolts and to allow for movement of pipes at hangers.

11.2 PAINTING

Machinery and piping in engine room shall be painted expect following parts.

1. Working surface of machinery, brass surface, and other parts which are finished bright.
2. Surface of insulation which are not covered with steel plates.
3. Internal surface of machinery, piping and tanks except otherwise mentioned.

The colour of finished coat for external surface shall be in accordance with the following table.

Name of machinery or equipment	Colour
Diesel engine Main air compressor Cooler Aux. condenser Main air reservoir Fresh water generator Intermediate shaft bearing	Light blue green (Munsel notation : 7.5BG7/2)
Turbocharger	Silver
C/R packaged air conditioner	Light blue green (Munsel notation : 7.5BG7/2)
Aux. boiler Incinerator	Maker's standard
Tank Pipe (Not insulated) Air trunk	White (Munsel notation : N-9.5)

Other machinery and equipment shall be painted in accordance with Maker's standard.

The piping system shall be discriminated with colour bands.

SECTION 12 MISCELLANEOUS EQUIPMENT

12.1 OIL PURIFYING DEVICE

12.1.1 Fuel oil purifier

Two (2) fuel oil purifiers shall be disc bowl type.

One (1) of these purifiers shall be able to use as diesel oil purifier.

The materials of main parts shall be as follows:

Bowl disc	Stainless steel
Bowl body	Special stainless steel
Frame	Cast iron
Vertical shaft	Special alloy steel

The fittings and accessories shall be as follows:

1 － oil level gauge
1 － multi monitor
1 － set of disc
1 － oil feed pump

As to automatic system, refer to Subsection **13.5 INSTRUMENTATION AND CONTROL IN ENGINE CONTROL ROOM**.

12.1.2 Lubricating oil purifier

One (1) lubricating oil purifier and one (1) D/G lubricating oil purifier shall be disc bowl type.

The materials of main parts shall be as follows:

Bowl disc	Stainless steel
Bowl body	Special stainless steel
Frame	Cast iron
Vertical shaft	Special alloy steel

The fittings and accessories shall be as follows:

1 － oil level gauge
1 － multi monitor
1 － set of disc

As to automatic system, refer to Subsection **13.5 INSTRUMENTATION AND CONTROL IN ENGINE CONTROL ROOM**.

12.2 BILGE SEPARATOR

One (1) bilge separator shall be provided in engine room.

The materials of main parts shall be as follows:

Casing	Steel plate

The fittings and accessories shall be as follows:

1 － solenoid valve
1 － relief valve
2 － drain plug
2 － test cock
2 － sets of pressure gauge with cock
1 － set of bilge alarm device
1 － set of automatic 3-way valve

12.3 ENGINEER'S WORKSHOP AND STORE ROOM

The engineer's workshop shall be provided at suitable location in engine room and shall be provided with the machine tools as listed in the Subsection **1.2 MACHINERY PARTICULAR**, a work table combined with vice and etc. as Builder's practice. Tool cabinet shall be provided two (2) sets in the workshop.

Metal shelves shall be provided in the store room to hold small spare parts and tools.

Oxygen & acetylene bottles shall be located on outside of engine room and it's shall be led to engineer's workshop by means of fixed piping.

12.4 LIFTING GEAR AND TOOL

One (1) overhead traveling crane, having as electrically hoist shall be installed over the main engine for overhauling cylinder cover, cylinder liner and piston.

Hoisting and longitudinal travelling shall be electrically performed, and transverse travelling shall be performed by hands by means of link chain pulley and reduction gear.

Plane trolleys and I beams shall be provided for overhauling diesel generator engine and purifiers respectively.

Eye plate shall be suitably fitted for overhauling pumps, heat exchangers and strainers of heavy weight.

12.5 TANK IN ENGINE ROOM

Tanks as listed in the Subsection **1.2 MACHINERY PARTICULAR** shall be provided in the engine room.

All tanks shall be made of welded steel plate.

Regarding the insulation and painting of tanks, refer to **SECTION 11 INSULATION AND PAINTING**.

All tanks shall be fitted with necessary connections and fittings as following table.

Name of tank	Fitting							
	Emerg. Shut-off valve	Self closing valve	Air vent	Level gauge	Heat. coil	Heat. coil ratio (m^2/m^3)	Boiling connec-tion	Remarks (Thermo-meter)
Heavy fuel oil settling tank	O	O	O	F	O	0.3	o*	O
Heavy fuel oil service tank	O	O	O	F	O	0.3	o*	O
L/S fuel oil service tank	O	O	O	F	O	0.3	o*	O
Diesel oil service tank	O	O	O	F	-	-	o*	
Sludge tank	-	O	O	S	O	0.1	o*	
Fuel oil drain tank	-	-	O	S	O	0.1	o*	
Fuel oil overflow tank	-	-	O	F	O	0.03	o*	
M/E lub. oil sump tank	-	-	O	F&S	-	-	-	
M/E lub. oil storage tank	-	-	O	F	-	-	-	
M/E lub. oil settling tank	O	O	O	F	O	0.2	o*	O
D/G lub. oil storage tank	-	-	O	F	-	-	-	
D/G lub. oil settling tank	O	O	O	F	O	0.2	o*	O
S/T lub. oil sump tank	-	-	O	F	-	-	-	
S/T lub. oil seal pot	-	-	O	F	-	-	-	
Cylinder oil storage tank	O	-	O	F	-	-	-	
Cylinder oil alarm chamber	-	-	O	-	-	-	-	
Stuffing box drain tank	-	-	O	S	-	-	-	
Scavenging box drain tank	-	-	O	S	O	0.1	o*	
Cool. F.W. expansion tank	-	-	-	G	-	-	-	Open
MGO C.F.W. expansion tank	-	-	-	-	-	-	-	Open
Deaeration tank	-	-	O	-	-	-	-	
Cascade tank (Inspect. tank)	-	-	-	SG	-	-	-	Open
Fresh water pressure tank	-	-	-	G	-	-	-	
Drinking water press. tank	-	-	-	G	-	-	-	

Name of tank	Fitting							
	Emerg Shut-off valve	Self closing valve	Air vent	Level gauge	Heat. Coil	Heat. coil ratio (m^2/m^3)	Boiling connec -tion	Remarks (Thermo -meter)
Waste oil tank	O	-	O	F	O	0.5	o*	O
Bilge primary tank	-	-	-	-	-	-	-	Open
Bilge tank	-	-	O	S	-	-	o*	
Bilge sludge tank	-	-	O	S	O	0.01	o*	
Clean drain tank	-	-	O	S	-	-	-	

Note : Abbreviation

F : Float gauge
G : Glass gauge
G* : Flat type glass gauge
SG : Sight glass
S : Sounding pipe
o* : Seat only
O : To be fitted

12.6 FLOOR, LADDER AND GRATING

The engine room floor and operation platform shall be of 4.5 mm checkered pattern steel plate, supported on suitable angle.

Removable sections shall be provided as required for proper access for handling and inspection of the equipment located under floor and manholes.

Engine room gratings shall be provided at the place where are required for proper access to the equipment.

The gratings shall have steel bars of Maker's standard pattern and which shall be suitably spaced and properly fitted in flat steel bar counterframes.

Ladders shall be fitted as required for convenient access to various grating levels.
Main ladders shall have foot grating and the vertical ladders shall have steps of round section steel bars. The inclination of main ladders shall be about 55° where applicable. The width of main ladders shall be 600 mm and that of sub-ladders shall be 500 mm. Vertical ladders shall be used only for unimportant, access to provisionally.

Handrails shall be fitted at gratings, ladders and floors where are necessary for the safety and convenience of operating personnel. Handrails shall be of steel pipe carried in steel pipe stanchions and shall be fitted with portable sections where required or overhauling machinery. Double handrails shall be fitted only at the main engine top and middle grating and above upper deck level in engine room. M/E overhauling platform arrangement shall be provided as Maker's standard.

12.7 VENTILATION FOR ENGINE ROOM

Mechanical supply ventilating system shall be provided for the engine room. The fresh air for each ventilating fan shall be taken from separate ventilating air inlets and shall be distributed to the engine room through ducts.

Total supply capacity of ventilating fans shall be determined based on the amount of air consumed by the main engine running at maximum output, taking the air consumption of diesel generator engine.

As to detail of ventilating fan, refer to Subsection **7.5 ENGINE ROOM VENTILATING FAN**.

12.8 FIRE FIGHTING SYSTEM IN ENGINE ROOM

The ship shall be provided with fire fighting system in accordance with the rule requirement.

There shall be provided two (2) fire pumps (Bilge & ballast pump and Fire & G.S. pump), fire valve and hose the suitable place in engine room.

Portable foam fire extinguisher and removal foam fire extinguisher etc. shall be provided in accordance with the rule requirement.
Details of fire fighting system, refer to **PART Ⅱ HULL PART**.

Fixed water-based local fire fighting system shall be provided in accordance with the rule requirement.

The emergency stop switch shall be provided outside of engine room. Details of the emergency stop switch, refer to **PARTⅣ ELECTRIC PART**.

The emergency shut off valve device shall be provided outside engine room for fuel oil and lub. oil tanks which air described on Subsection **12.5 TANK IN ENGINE ROOM**.

12.9 INCINERATOR

There shall be installed one (1) set of waste oil incinerator for dispose of sludge and waste oil.
The construction, materials and accessories shall be in accordance with Maker's standard.

12.10 NAME PLATE AND CAUTION PLATE

Name plate for machinery shall be in English and in SI unit.

Caution plate for machinery shall be in English and Japanese.
In principle, name plate written in English shall be fitted to each valve which nominal diameter 15A and above.

Tanks in engine room shall be fitted with name plate.

SECTION 13 AUTOMATION AND REMOTE CONTROL

13.1 GENERAL

The control and monitoring system specified in this specification shall be designed to comply with the requirement of the Rule applicable, so as to operate the ship with unattended machinery space for period of proper hours under all sailing condition including maneuvering.

There shall be provided an engine control room in the engine room.

The main engine shall be remotely controlled from either bridge or engine control room.

The control and monitoring equipment for propulsion plant and associated ship service system shall be assembled and installed in the engine control room in order to obtain same effect on the handling which could be done at normal control and local monitoring.

Emergency running shall be also be able to do at local by means of control device of necessary minimum number.

As to communication equipment etc., refer to **PART IV ELECTRIC PART**.

13.2 MAIN ENGINE REMOTE CONTROL SYSTEM

The main engine remote control system shall be provided performance of reversing, starting, stopping and speed setting of the main engine, electrically-pneumatically with a micro-computer from the bridge by operating a single telegraph transmitter, and electrically-pneumatically with a micro computer from the engine control room by operating the telegraph receiver and maneuvering dial for reversing, speed setting and starting.

When the main engine control is carried out from the engine control room or local, the telegraph handle on bridge control console shall be used as conventional type engine telegraph.

The local control system shall be provided on the main engine for the case of emergency in failure of the remote control system or the governor.

13.3 ENGINE CONTROL ROOM

The independent engine control room well-illuminated, air conditioned and of sound-proof, shall be located suitable place in engine room, and shall serve various purposes, such as centralized controls, supervision and date collecting, and improving the circumstance for crew and the reliability on instruments.

The engine control room shall have a sufficient space to install the following.

・ Control console	1 set
・ Air conditioning unit	1 set
・ White board	1
・ Chair	2
・ Drawing locker	1 set
・ Main switch board	1 set
・ Group starter panel	1 set
・ Meeting table and bench	1 set

Ventilation of the engine control room shall be of semi-forced ventilating system. A branch duct from the engine room ventilating air supply duct shall be led to the engine control room.
The exhaust air from the engine control room shall be released to engine room by means of natural ventilation.

The engine control room shall have two (2) sound-proof doors with a fixed glass window, and one (1) glass window.

13.4 ALARM SYSTEM

Alarm of machinery located in engine room shall be able to recognize by indicating lamps or display in engine control room.

As for details of the alarming and other instruments, refer to Subsection **13.5 INSTRUMENTATION AND CONTROL IN ENGINE CONTROL ROOM**.

When the abnormal condition happen in engine room during “Unattended machinery spaces” running, indicating of group shall be done with alarm at following places.

1) Alarm indicating place

- Bridge
- Ship's office
- Officer's mess room
- Saloon
- Chief engineer's room
- 1st engineer's room
- 2nd engineer's room
- 3rd engineer's room

Alarm for 1st, 2nd and 3rd engineer's room shall be selected only for the duty engineer's room by select switch, provided in engine control room.

Extension alarm panel shall be of identification of group "A", "B", "C", "D" and "E".

2) Group of indicating

"A" group	: Main engine emergency shut down
"B" group	: Main engine slow down
"C" group	: Main engine and propulsion auxiliaries trouble except "A" and "B" group
"D" group	: Electric and steam generating plants trouble
"E" group	: Other trouble

The smoke type or temperature type fire detector shall be fitted in the engine room, and sectionalized into proper groups to cover specified zone of engine room which shall be identified in the fire alarm panel provided in bridge.

The audible fire alarm shall be provided to engine room, engine control room, bridge and each storey passage of accommodation quarter.

3) Operation of extension alarm

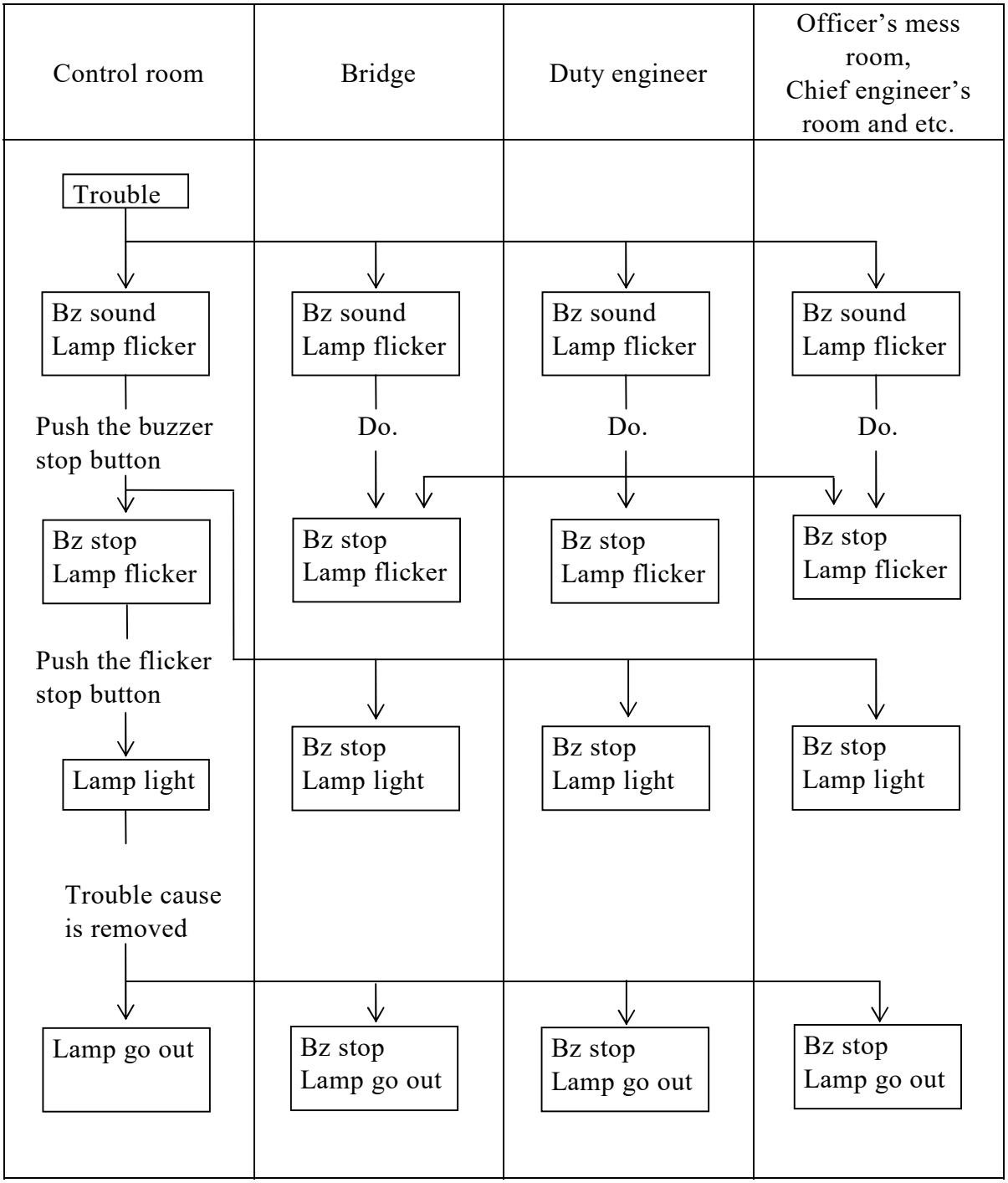

4) Operation of alarm lamp and buzzer in engine control room

Condition \ Alarm		Running indication and stop alarm		Press., temp., level and other alarm	
		Lamp	Buzzer	Lamp	Buzzer
Normal	Stopping	Go out	Silence	Go out	Silence
	Running	Light (Green)	Silence		
Abnormal		Flickering (Red)	Sound	Flickering (Red)	Sound
Push the buzzer stop button		Flickering (Red)	Silence	Flickering (Red)	Silence
Push the flicker stop button		Light (Red)	－	Light (Red)	－
Push the reset button at starter panel		Go out	－	－	－
Return to normal		－	－	Go out	Silence

13.5 INSTRUMENTATION AND CONTROL IN ENGINE CONTROL ROOM

Abbreviation:

① …… Item to be provided
H …… High alarm
L …… Low alarm
△ …… Monitor

Note:

(1) Details of Display shall be as follows:

Size of display : 15 inches (Color)
Number of set : 2 sets
Operating panel : 2 sets
Log printer (log & alarm) : 1 set

Indicating pattern shall be in accordance with Maker's standard.

Division		Item	Automation	LOCAL				CENTRAL CONTROL STATION									BRIDGE					Alarm group	Remarks
									INDICAT.			LAMP		ALARM									
				Handling	Indicator	Indicat. Lamp	Alarm	Handling	Independent	Display	Recording	Independent	Display	Independent	Display	Recording	Handling	Indicator	Indicat. Lamp	Alarm	Recording		
MAIN ENGINE	Maneuvering system	Start & stop		○				○									1) ○						1) Common control lever with engine telegraph
		Reversing		○				○									1) ○						
		Speed control		○				○									1) ○						2) Due to follows ・Over speed ・L.O. press. drop ・Manual emergency trip (E/S, C/R, W/ H) ・T/C L.O. press. drop
		Load limitation	○					○				7) ①					○		①				
		Upper speed limit										7) ①							①				
		Program by-pass						○				7) ①					○		①				3) On C/R indicator panel
		Emergency trip	2) ○				8) ①					7) ④			①	①				5) ③		A	4) Due to follows ・Crank case high oil mist ・Scavenging box fire ・Piston cool. oil non-flow ・L.O. low press. ・Jacket C.F.W. low press ・Jacket C.F.W. out. H.T. ・Piston cool.oil out. H.T. ・Exh.gas cyl. out. H.T. ・Thrust pad high temp. ・ME ECS slow down (Inc. cyl. lub. oil non flow)
		Manual emerg. trip		○		8) ①		○				7) ①					○		①				
		Emergency trip reset		○				○									○						
		Emergency trip cancel				8) ①		9) ○				7) ①					9) ○		①				
		Auto. slow down	4) ○									7) ⑩			①	①				5) ②		B	
		Auto. slow down reset						○									○						5) Including "Pre-warning" 6) In case of E/S maneuv. 7) On CDP 8) On E/S teleg.& Indi. box 9) Due to T/C L.O. press. drop
		Auto. slow down cancel				8) ①		○				7) ①					○		①				
		Slow down request				8) ①									6) ①	①				①		B	
		Increase limitation		○		8) ①		○				3) ①					○		①				

Division		Item	Automation	LOCAL				CENTRAL CONTROL STATION									BRIDGE					Alarm group	Remarks
									INDICAT.			LAMP		ALARM									
				Handling	Indicator	Indicat. Lamp	Alarm	Handling	Independent	Display	Recording	Independent	Display	Independent	Display	Recording	Handling	Indicator	Indicat. Lamp	Alarm	Recording		
MAIN ENGINE	Maneuvering system	Control position		1) ○		3) ③		2) ○				3) ③					4) ○		3) ③				1) Engine side－Remote
																							2) E/S－C/R－W/H
		Imperfect Bridge control condition													①	①				①		C	3) ”E/S”,“C/R”,“W/H”
		Engine telegraph		○	5) ○			○	5) ○								○	5) ○	8) ○		7) ○		4) Confirmation
		Sub－telegraph						○				6) ③					○		6) ③		7) ○		5)
		Handle matching										9) ①							①				
		Turning gear engage				11) ①						9) ①											
		Turning gear disengage		○		11) ①						9) ①											
		ME ECS slow down													①	①						B	
		ME ECS abnormal													①	①						C	
		Starting air valve		○								10) ②											6) ”F/E”,”S/B”,”R/U”
		Main engine revolution			①				△1	△1	①							④					7) Recording the order and time
		Main engine revolution counter							①														8) Telegraph repeater 9) On C/R indicator panel
		Turbocharger revolution							△1														10) “Service” & “Block” 11) On E/S teleg.& Indi. box
		Fuel index							△1	△1	①												

AHEAD	NAV.FULL
	FULL
	HALF
	SLOW
	D. SLOW
STOP	
ASTERN	D. SLOW
	SLOW
	HALF
	FULL
	E. FULL

Division		Item	Automation	LOCAL				CENTRAL CONTROL STATION									BRIDGE					Alarm group	Remarks
									INDICAT.			LAMP		ALARM									
				Handling	Indicator	Indicat. Lamp	Alarm	Handling	Independent	Display	Recording	Independent	Display	Independent	Display	Recording	Handling	Indicator	Indicat. Lamp	Alarm	Recording		
MAIN ENGINE	Maneuvering system	Starting failure													①	①				①		C	1) Critical speed continuous running 2) On C/R indicator panel 3) Source failure 4) On E/S teleg.& Indi. Box 5) On CDP
		Wrong way				4) ①								2) ①	①	①						C	
		Critical speed	○												1) ①	①				1) ①		C	
		AC/DC power source													3) ②	②				②		C	
		Remote control system abnormal													①	①						C	
		Remote control source										5) ①			3) ①	①						C	
		Safty system abnormal													①	①						C	
		Safty source										5) ①			3) ①	①						C	
		Telegraph logger system abnormal													①	①						C	
		Telegraph system abnormal													①	①						C	
		Telegraph source										5) ①			3) ①	①				①		C	
		EICU source													3) ①	①						C	
		Bridge source													3) ①	①						C	
		C/R back-up power source													3) ①	①						C	
		C/R back-up system failure													①	①						C	

Division		Item	Automation	LOCAL				CENTRAL CONTROL STATION									BRIDGE					Alarm group	Remarks
									INDICAT.			LAMP		ALARM									
				Handling	Indicator	Indicat. Lamp	Alarm	Handling	Independent	Display	Recording	Independent	Display	Independent	Display	Recording	Handling	Indicator	Indicat. Lamp	Alarm	Recording		
MAIN ENGINE	Maneuvering system																						1) Auto. start & stop by scavenging air press.
																							2) “M0”
		Start block													①	①						C	3) “MAN-1/E-2/E-3/E”
		Engine not ready													①	①						C	4) “1/E”,”2/E”,”3/E”
																							5) “Auto. position request”
		Auxiliary blower	1) ○	○				○				②		5)	① ②	① ②						C	
		Auxiliary blower running fail													①	①						C	
		Unattended machinery space						3) ○				2) ①							2) ①				
		Duty engineer										4) ③							4) ③				

Division		Item	Automation	LOCAL				CENTRAL CONTROL STATION									BRIDGE					Alarm group	Remarks
									INDICAT.			LAMP		ALARM									
				Handling	Indicator	Indicat. Lamp	Alarm	Handling	Independent	Display	Recording	Independent	Display	Independent	Display	Recording	Handling	Indicator	Indicat. Lamp	Alarm	Recording		
MAIN ENGINE	Pressure	Fuel oil inlet			1) ①				△1	△1	①				L △1	①						C	1) To be fitted with strainer outlet 2) System failure
		Lub. oil inlet			①				△1	△1	①				L △1	①						B	
		Piston cooling oil inlet			①										L ①	①						C	
		Turbocharger lub. oil inlet			①					△1	①				L △1	①						C	
		Jacket cooling F.W. inlet			①					△1	①				L △1	①						B	
		Air cooler sea water inlet								△1	①				L △1	①						C	
		Exhaust valve spring air													L ①	①						C	
		Scavenging air			①				△1	△1	①												
		Starting air main valve inlet			①				△1	△1	①				L △1	①				L ①		C	
		Maneuvering air			①					△1	①				L △1	①				2) ○		C	

Division		Item	Automation	LOCAL				CENTRAL CONTROL STATION									BRIDGE					Alarm group	Remarks
									INDICAT.			LAMP		ALARM									
				Handling	Indicator	Indicat. Lamp	Alarm	Handling	Independent	Display	Recording	Independent	Display	Independent	Display	Recording	Handling	Indicator	Indicat. Lamp	Alarm	Recording		
MAIN ENGINE	Pressure	Fuel oil 2nd filter difference	○		○										H ①	①						C	1) U tube type
		Lub. oil 2nd filter difference			○										H ①	①						C	
		Turbocharger air filter difference			1) ①																		
		Air cooler in/out difference			1) ①																		
		HPS filter difference													H ①	①						C	
		HPS by-pass filter difference													H ①	①						C	

Division		Item	Automation	LOCAL				CENTRAL CONTROL STATION									BRIDGE					Alarm group	Remarks
									INDICAT.			LAMP		ALARM									
				Handling	Indicator	Indicat. Lamp	Alarm	Handling	Independent	Display	Recording	Independent	Display	Independent	Display	Recording	Handling	Indicator	Indicat. Lamp	Alarm	Recording		
MAIN ENGINE	Temperature	Fuel oil inlet	1) ○		①					△1	①				HL △2	②						C	1) By the pneumatic type temp. control valve
		Lub. oil inlet	1) ○		①					△1	①				H △1	①						C	
		Piston cooling oil each cylinder outlet			⑥					△6	⑥				H △6	⑥						B	
		Turbocharger lub. oil outlet			①					△1	①				H △1	①						C	
		Jacket cooling F.W. inlet			①					△1	①												
		Jacket cooling F.W. each cylinder outlet	1) ○							△6	⑥				H △6	⑥						C	
		Jacket cooling F.W. each cylinder outlet (S/D)													H △6	⑥						B	
		Thrust pad			①					△1	①				H △1	①						B	
		Air cooler air inlet			①																		
		Air cooler air outlet			①																		
		Scavenging air			①					△1	①												
		Air cooler sea water inlet			①																		
		Air cooler sea water outlet			①																		

Division		Item	Automation	LOCAL				CENTRAL CONTROL STATION									BRIDGE					Alarm group	Remarks
									INDICAT.			LAMP		ALARM									
				Handling	Indicator	Indicat. Lamp	Alarm	Handling	Independent	Display	Recording	Independent	Display	Independent	Display	Recording	Handling	Indicator	Indicat. Lamp	Alarm	Recording		
MAIN ENGINE	Temperature	Exhaust gas each cylinder outlet								⚠6	⑥				1) ⚠6	⑥						B	1) "High temp." and "High deviation"
		Exhaust gas each cylinder outlet deviation								⚠6					H ⚠6	⑥						C	
		Exhaust gas turbocharger inlet								⚠1	①				H ⚠1	①						C	
		Exhaust gas turbocharger outlet								⚠1	①				H ⚠1	①						C	
		Scavenging box fire								⚠6	⑥				H ⚠6	⑥						B	
		Fuel oil flow meter inlet			①																		
		Cylinder oil flow meter inlet			①																		
	Tank level	Lub. oil sump tank			①										L ①	①						C	
		Jacket cool. F.W. expansion tank			①										L ①	①						C	
		Cylinder oil alarm chamber													L ①	①						C	
		Fuel oil leakage tank													H ①	①						C	
		Mist catcher drain													H ①	①						C	
		Scav. box drain tank													H ①	①						C	
		Stuff. box drain tank													H ①	①						C	

Division		Item	Automation	LOCAL				CENTRAL CONTROL STATION									BRIDGE					Alarm group	Remarks
									INDICAT.			LAMP		ALARM									
				Handling	Indicator	Indicat. Lamp	Alarm	Handling	Independent	Display	Recording	Independent	Display	Independent	Display	Recording	Handling	Indicator	Indicat. Lamp	Alarm	Recording		
MAIN ENGINE	Etc.																						1) Abnormal
		Piston cooling oil non-flow													⑥	⑥						B	
		Crank case oil mist							⑦						H ①	①						B	
		Oil mist detector													1) ①	①						C	
		A-C oil change-over		○																			
		M/E hydraulic pump	○	○				○					②		1) ②	②						C	
		Fuel oil flow meter			①																		
		Cylinder oil flow meter			①																		
		Deaeration tank													1) ①	①						C	
		M/E PSU AC power failure													②	②						C	
		M/E PSU UPS controller abnormal													②	②						C	
		M/E PSU 24V DC battery mode													②	②						C	

Division		Item	Automation	LOCAL				CENTRAL CONTROL STATION									BRIDGE					Alarm group	Remarks
									INDICAT.			LAMP		ALARM									
				Handling	Indicator	Indicat. Lamp	Alarm	Handling	Independent	Display	Recording	Independent	Display	Independent	Display	Recording	Handling	Indicator	Indicat. Lamp	Alarm	Recording		
SHAFTING	Temperature	Intermediate shaft bearing			①					⚠	①				H ⚠	①						C	
		Stern tube bearing lub. oil outlet			①																		
		Stern tube bearing								⚠2	②				H ⚠2	②						B	
	Tank level																						
		Stern tube lub. oil sump tank			①										L ①	①						C	
		Stern tube seal pot			①										HL ②	②						C	
	Etc.	Stern tube lub. oil non-flow													①	①						C	
		Stern tube fwd seal lub. oil non-flow													①	①						C	

Division		Item	Automation	LOCAL				CENTRAL CONTROL STATION									BRIDGE					Alarm group	Remarks
									INDICAT.			LAMP		ALARM									
				Handling	Indicator	Indicat. Lamp	Alarm	Handling	Independent	Display	Recording	Independent	Display	Independent	Display	Recording	Handling	Indicator	Indicat. Lamp	Alarm	Recording		
ELECTRIC GENERATING PLANT	Diesel engine	Start	1) ○	○				○				2) ③			3) ③	③						D	1) Due to follows ・Over current ・High voltage ・Low voltage ・Low frequency ・D/G emerg. trip 2) Running lamp 3) Due to start failure 4) Auto.-Manual 5) Due to follows ・F.O. handle “Run” position 6) Due to follows ・Over speed ・L.O. press. drop ・F.W. high temp.
		Stop		○				○															
		Change-over		○				4) ○															
		Ready for start										5) ③											
		Emergency trip	6) ○												⑨	⑨						D	
		Fuel oil flow meter			①																		
		Diesel oil flow meter			①																		
		Fuel oil leakage tank													H ③	③						D	
		Speed relay abnormal													③	③						D	

Division		Item	Automation	LOCAL				CENTRAL CONTROL STATION									BRIDGE					Alarm group	Remarks
									INDICAT.			LAMP		ALARM									
				Handling	Indicator	Indicat. Lamp	Alarm	Handling	Independent	Display	Recording	Independent	Display	Independent	Display	Recording	Handling	Indicator	Indicat. Lamp	Alarm	Recording		
ELECTRIC GENERATING PLANT	D/G pressure	Lub. oil inlet			③					△3	③				L △3	③						D	1) By the wax type temp. control valve 2) By the pneumatic type temp. control valve
		High temp. cooling F.W. inlet			③					△3	③				L △3	③						D	
		Low temp. cooling F.W. inlet			③					△3	③				L △3	③						D	
		Turbocharger lub. oil inlet			③										L ③	③						D	
		Starting air inlet													L ③	③						D	
		Control air inlet													L ③	③						D	
		Fuel oil inlet			③																		
		Fuel oil 2nd filter difference	○												H ①	①						D	
		Lub. oil filter difference	○												H ③	③						D	
	D/G temperature	Lub. oil inlet	1) ○		③					△3	③				H △3	③						D	
		High temp. cooling F.W. outlet	1) ○		③					△3	③				H △3	③						D	
		Exhaust gas each cylinder outlet			⑱																		
		Exhaust gas turbocharger inlet			⑥					△6	⑥				H △6	⑥						D	
		Fuel oil inlet	2) ○		③					△3	③				HL △6	⑥						D	
		Low temp. cooling F.W. inlet	2) ○		①					△1	①				HL △2	②						D	
		Boost air inlet			③																		

Division		Item	Automation	LOCAL				CENTRAL CONTROL STATION									BRIDGE					Alarm group	Remarks
									INDICAT.			LAMP		ALARM									
				Handling	Indicator	Indicat. Lamp	Alarm	Handling	Independent	Display	Recording	Independent	Display	Independent	Display	Recording	Handling	Indicator	Indicat. Lamp	Alarm	Recording		
ELECTRIC GENERATING PLANT	Generator	Current							③						H ③	③						D	1) "Stand-by" & "Run"
		Voltage							③						HL ②	②						D	2) "MSB & FORE" & "ESB"
		Frequency							②						HL ②	②						D	
		Electric power							③														
		MSB control source failure													①	①						D	
		MSB circ. breaker trip source failure													①	①						D	
		MSB control system failure													①	①						D	
		ACB non-close													③	③						D	
		ACB abnormal													③	③						D	
		Preferential trip													①	①						D	
		AC440V insulation													①	①						E	
		AC100V insulation													2) ②	②						E	
		Emergency generator engine abnormal										1) ②			①	①						D	

Division		Item	Automation	LOCAL				CENTRAL CONTROL STATION									BRIDGE					Alarm group	Remarks
									INDICAT.			LAMP		ALARM									
				Handling	Indicator	Indicat. Lamp	Alarm	Handling	Independent	Display	Recording	Independent	Display	Independent	Display	Recording	Handling	Indicator	Indicat. Lamp	Alarm	Recording		
AUXILIARY BOILER	General	Running	○	○		①							①										1) Due to follows ・Miss fire & flame failure ・F.D. fan stop ・Drum level lowest ・F.O. temp. drop ・F.O. press. drop ・Source failure ・Exh. gas high temp. 2) Common alarm 3) Controlled by "ON-OFF" system 4) Auto. start & stop by detect. the drum water level 5) By the thermostat
		Emergency trip	1) ○	○											2) ①	①						D	
	Running	F.O. burning pump		○																			
		Forced draft fan	3) ○	○											①	①						D	
		Feed water pump	4) ○	○																			
	Pressure	Drum steam	3) ○		①				△1	△1	①				L △1	①						D	
		Burner F.O. inlet			①																		
	Temp.	F.O. heater outlet	5) ○		①										HL ②	②						D	

Division		Item	Automation	LOCAL				CENTRAL CONTROL STATION									BRIDGE					Alarm group	Remarks
									INDICAT.			LAMP		ALARM									
				Handling	Indicator	Indicat. Lamp	Alarm	Handling	Independent	Display	Recording	Independent	Display	Independent	Display	Recording	Handling	Indicator	Indicat. Lamp	Alarm	Recording		
AUXILIARY BOILER	Level	Drum	○		○		HL ②								HL ②	②						D	1) By the float valve
		Cascade tank	1) ○												L ①	①						D	2) By the pneumatic type press. control valve
	Etc.	Excess steam dumping	2) ○	○																			
		Soot blower		○																			
		Fuel oil flow meter			①																		

Division		Item	Automation	LOCAL				CENTRAL CONTROL STATION									BRIDGE					Alarm group	Remarks
									INDICAT.			LAMP		ALARM									
				Handling	Indicator	Indicat. Lamp	Alarm	Handling	Independent	Display	Recording	Independent	Display	Independent	Display	Recording	Handling	Indicator	Indicat. Lamp	Alarm	Recording		
FUEL OIL SYSTEM	Running	Fuel oil purifier	1) ○	○		②							②		2) ②	②						E	1) Auto. sludge discharge system
		Fuel oil shifter	5) ○	○		②									①	①						E	2) Due to follows ・Oil leakage
																							3) By the direct type temp. control valve
																							4) By the pneumatic type temp. control valve
	Temperature	Heavy fuel oil settling tank	3) ○		①										H ①	①						E	5) Auto. start & stop by detecting fuel oil trans. pump running
		Heavy fuel oil service tank			①										H ①	①						E	
		L/S fuel oil service tank			①										H ①	①						E	
		Purifier fuel oil inlet	4) ○		②										H ②	②						E	
		Shifter fuel oil heater outlet	4) ○		①										H ①	①						E	
		Waste oil tank			②										H ②	②						E	

Division		Item	Automation	LOCAL				CENTRAL CONTROL STATION									BRIDGE					Alarm group	Remarks
									INDICAT.			LAMP		ALARM									
				Handling	Indicator	Indicat. Lamp	Alarm	Handling	Independent	Display	Recording	Independent	Display	Independent	Display	Recording	Handling	Indicator	Indicat. Lamp	Alarm	Recording		
FUEL OIL SYSTEM	Tank level	Heavy fuel oil settling tank	1) ○		①										HL ②	②						E	1) By auto. start & stop of F.O. transfer pump 2) Over flow system 3) By auto. start & stop of D.O. transfer pump 4) Overflow
		Heavy fuel oil service tank	2) ○		①										L ①	①						E	
		L/S fuel oil service tank	2) ○		①										L ①	①						E	
		Diesel oil service tank	3) ○		②										HL ④	④						E	
		Waste oil tank			②										L ②	②						E	
		Fuel oil drain tank			①										H ①	①						E	
		Fuel oil overflow tank			①										H ①	①						E	
	Etc.																						
		Fuel oil overflow line													4) ①	①						E	

Division		Item	Automation	LOCAL				CENTRAL CONTROL STATION									BRIDGE					Alarm group	Remarks
									INDICAT.			LAMP		ALARM									
				Handling	Indicator	Indicat. Lamp	Alarm	Handling	Independent	Display	Recording	Independent	Display	Independent	Display	Recording	Handling	Indicator	Indicat. Lamp	Alarm	Recording		
LUB. OIL SYSTEM	Running	Lub. oil purifier	1) ○	○		①							①		2) ①	①						E	1) Auto. sludge discharge system
		D/G Lub. oil purifier	1) ○	○		①							①		2) ①	①						E	2) Due to follows ・Oil leakage
																							3) By the pneumatic type temp. control valve
	Temperature	Purifier lub. oil inlet	3) ○		①										H ①	①						E	
		D/G Purifier lub. oil inlet	3) ○		①										H ①	①						E	
	Level																						

Division		Item	Automation	LOCAL				CENTRAL CONTROL STATION									BRIDGE					Alarm group	Remarks
									INDICAT.			LAMP		ALARM									
				Handling	Indicator	Indicat. Lamp	Alarm	Handling	Independent	Display	Recording	Independent	Display	Independent	Display	Recording	Handling	Indicator	Indicat. Lamp	Alarm	Recording		
COMPRESSED AIR SYSTEM	Running	Main air compressor	1) ○	○				2) ○				②			3) ②	②						E	1) Auto. start & stop
		Emergency air compressor		○																			2) Auto.- Manual and start - stop
		Deck service air compressor		○											4) ①								3) Abnormal stop ・Compress. air outlet high temp.
	Pressure	Main air reservoir			②					⚠2	②				L ⚠2	②						E	4) Abnormal
		Control air			①										L ①	①						E	
		Emergency shut off valve operating air			①										L ①	①						E	
		Deck service air reservoir			①																		
	Temp.	Main air compressor cooling F.W. inlet			②																		
		Main air compressor cooling F.W. outlet			②																		
BILGE SYSTEM	Level	Bilge well													H ③	③				H ①		E	
		Bilge tank													H ①								
		Bilge sludge tank													H ①								
		Sludge tank													H ①								
		Clean drain tank													H ①								

Division		Item	Automation	LOCAL				CENTRAL CONTROL STATION									BRIDGE					Alarm group	Remarks
									INDICAT.			LAMP		ALARM									
				Handling	Indicator	Indicat. Lamp	Alarm	Handling	Independent	Display	Recording	Independent	Display	Independent	Display	Recording	Handling	Indicator	Indicat. Lamp	Alarm	Recording		
AUXILIARY MACHINE	General	Fresh water generator	1) ○	○		①									2) ①	①						E	1) Dump to evaporator by high salinity
		Bilge separator	8) ○	○		①									3) ②	②						E	2) Due to high salinity
		Sewage treatment unit													4) ①	①						E	3) Due to high oil content and separator abnormal
		Ballast water treatment system													4) ①	①						E	
		Waste oil incinerator		○		①	4) ①						①		4) ①	①						E	4) Due to abnormal
																							5) Due to follows ・Non-voltage ・Over load ・Hyd. oil tank low level ・Phase failure
		Hot water heater steam valve	7) ○																				
	Temp.	Hot water heater outlet	6) ○		①																		
		Sea water (Ref. mach. C.S.W. pump outlet)								△1	①												6) By the pneumatic type temp. control valve
																							7) Auto. shut by thermostat
																							8) Auto. 3-way valve
	Etc.	Steering gear		○								②	②		5) ⑧	⑧	○		②	○		E	
		Air conditioner ref. machine	○	○									①		4) ①	①						E	
		Provision ref. machine	○	○									②		4) ②	②						E	
		Local fire fighting system													4) ①	①						E	
		Local fire fighting system start	○												①	①						E	

Division		Item	Automation	LOCAL				CENTRAL CONTROL STATION									BRIDGE					Alarm group	Remarks
									INDICAT.			LAMP		ALARM									
				Handling	Indicator	Indicat. Lamp	Alarm	Handling	Independent	Display	Recording	Independent	Display	Independent	Display	Recording	Handling	Indicator	Indicat. Lamp	Alarm	Recording		
GENERAL		Lamp & buzzer test switch						○									○						1) Source failure
		Buzzer stop button						○									○						
		Flicker stop button						○															
		Function test button						○															
		Automatic exchange telephone		○				○									○						
		Common battery telephone						○									○						
		Patrol man call						○															
		Engineer's call						○															
		Clock							①									①					
		Rudder angle							①									③					
		Console electric source (AC & DC)						○				②	②		1) ②	②						E	

Division	Item	Automation	LOCAL				CENTRAL CONTROL STATION									BRIDGE					Alarm group	Remarks
								INDICAT.			LAMP		ALARM									
			Handling	Indicator	Indicat. Lamp	Alarm	Handling	Independent	Display	Recording	Independent	Display	Independent	Display	Recording	Handling	Indicator	Indicat. Lamp	Alarm	Recording		
PUMP AND FAN	Main lub. oil pump	1) ○	○				○				②	②		3) ②	②						C	1) Auto. change by detect. the non-voltage and pressure
	Fuel oil booster pump	2) ○	○				○				②	②		3) ②	②						C	2) Auto. change by detect. the non-voltage
	M/E fuel oil circulating pump	2) ○	○				○				②	②		3) ②	②						C	3) Abnormal stop
	Jacket cool. F.W. pump	2) ○	○				○				②	②		3) ②	②						C	4) Auto. start and stop detect. by D/G running
	Cooling S.W. pump	2) ○	○				○				②	②		3) ②	②						C	
	Stern tube lub. oil pump	6) ○	○				○				②	②		3) ②	②						C	5) Auto. start by restart of D/G via black-out
	D/G fuel oil circulating pump	2) ○	○				○				②	②		3) ②	②						D	6) Auto. change by detect. the non-voltage and non-flow
	D/G diesel oil booster pump	5) ○	○				○				①	①		3) ①	①						D	7) Auto. stop by starting fixed water- based local fire fighting system
	Main air comp. cooling F.W. pump	8) ○	○				○				②	②		5) ②	②						E	
	L.O. purifier supply pump		○																			8) Auto. start and stop by detect. main air comp. running
	D/G L.O. purifier supply pump		○																			
	D/G lub. oil priming pump	4) ○	○		③							③		3) ③	③						D	
	Engine room ventilating fan	7) ○					○				③	③		3) ③	③						C	

Division	Item	Automation	LOCAL				CENTRAL CONTROL STATION									BRIDGE					Alarm group	Remarks
								INDICAT.			LAMP		ALARM									
			Handling	Indicator	Indicat. Lamp	Alarm	Handling	Independent	Display	Recording	Independent	Display	Independent	Display	Recording	Handling	Indicator	Indicat. Lamp	Alarm	Recording		
PUMP AND FAN	Fuel oil transfer pump	1) ○	○				○				①											1) Auto. start and stop by detecting the H.F.O. settling tank level
	Diesel oil transfer pump	2) ○	○				8) ○				①											
	Lub. oil transfer pump		○				○				①											2) Auto. start and stop by detecting the D.O. service tank level
	Bilge pump	3) ○	○				○				①			7) ①	①						E	
	Sludge pump		○				○				①											3) Auto. stop by bilge separator abnormal
	Boiler feed water pump	4) ○	○		②							②		5) ②	②						D	4) Auto. change by detect. the non-voltage
	Fire & G.S. pump		○				○				①					○						5) Abnormal stop
	Bilge & ballast pump		○				○				①											6) Auto. start and stop by detecting the press. tank pressure
	Ballast pump		○				○				②											
	Ref. mach. C.S.W. pump		○				○				①	①		5) ①	①						E	7) Due to long running
																						8) "No.1"-"No.2"
	Fresh water pump	6) ○	○				○				①											
	Drinking water pump	6) ○	○				○				①											
	Hot water circulating pump		○																			
	MGO C.F.W. pump		○																			

SECTION 14 SPARE PARTS

14.1 GENERAL

Spare parts shall be provided according to the requirement of the Classification rule and Maker's standard.
Smaller spare parts shall be stowed in suitable boxes with contents, on suitable position where convenient to the crew in engine room, but larger one shall be mounted and the stored directly on the wall of the ship.
Spare parts shall include the following at least.
Quantities shall be for one (1) ship.
Additional spare required by the Owner, if any, shall be supplied at extra cost.

14.2 MAIN ENGINE

(1) Cylinder cover and their fittings

Cylinder cover complete with studs, nuts, disk spring for valves (excluding valves)	1 cyl.
Studs and nuts for cylinder cover tightening	1/2 cyl.
Fuel valve complete	1 engine+1cyl.
O－ring for fuel valve	1 cyl.
Exhaust valve complete	3 cyl.
Piston rings for exhaust valve (driving side)	1 cyl.
Starting air valve complete	2 cyl.
Bursting disk for starting air valve	1 cyl.
Indicator valve complete	1 cyl.

(2) Main bearing

Main bearing shell	1 journal
Studs and nuts for one main bearing	1 set

(3) Cylinder liner

Cylinder liner	1 cyl.
O－ring for cylinder liner	1 cyl.
Non－return valves for lubrication	1/2 cyl.

(4) Thrust bearing

Thrust bearing segments for ahead	1 set

(5) Piston

Piston complete with piston rings, cooling pipe and piston rod	1 cyl.
Piston rings	1 cyl.
Piston rod stuffing box complete with sealing rings and scraping rings	1 cyl.
Telescopic pipe for piston cooling oil	1 cyl.
O－ring for stuffing box	1 cyl.

(6) Connecting rod

Crank pin bearing shell	1 cyl.
Studs and nuts for crankpin bearing	1 cyl.
Crosshead bearing shell lower part	1 cyl.
Studs and nuts for crosshead bearing	1 cyl.

(7) Fuel pump

Fuel pump barrel assembly with plunger	1 cyl.
Suction valve complete	1 cyl.
High pressure pipe, each type	1 cyl.

(8) Camshaft chain

Camshaft chain	6 links
Bearing shells with guide ring for camshaft at chain wheel	1 each

(9) Cylinder lubricator

Maker’s standard spare	1 set

(10) Hydraulic cylinder unit (HCU)

Maker’s standard spare	1 set

(11) Hydraulic system – Hydraulic power supply (HPS)

Maker’s standard spare	1 set
(Accumulator diaphragm(s) of each size	2 sets)

(12) Engine control system (ECS)

Maker's standard spare	1 set

(13) Exhaust gas turbocharger

Maker's standard spare	1 set

(14) Auxiliary blower

Maker's standard spare parts	1 set

(15) Turning gear

Maker's standard spare parts	1 set

(16) Air cooler

Zinc plate	1 engine
Maker's standard spare (except the above)	1 set

(17) Miscellaneous

Special packing of each size for one engine not specified elsewhere	1cyl. or 1set

14.3 SHAFTING AND PROPELLER

Stern tube seal device	Maker's standard

14.4 STEAM GENERATING PLANT

(1) Aux. boiler

Safety valve spring	1
Case for water level gauge	1
Gauge glass and packing for water level gauge	2
Packing for drum manhole	1
Nozzle tip	1 set
Spare parts of fuel oil burning unit without above said	Maker's standard

Other necessary spare parts shall be in accordance with Maker's standard.

14.5 DIESEL GENERATOR ENGINE (for one ship)

Piston ring	1 cyl.
Oil ring	1 cyl.
Crank pin metal	1 cyl.
Piston pin	1 cyl.
Piston pin metal assembly	1 cyl.
Bolts for connecting rod	1 cyl.
Suction valve (complete)	1 cyl.
Exhaust valve (complete)	2 cyl.
High pressure pipe for fuel oil (complete)	1 cyl.
Fuel injection pump (complete)	1 cyl.
Fuel injection valve (complete)	3 cyl.
Main bearing metal for each kind	1 brg.
Bolt assembly for main bearing	1 brg
Relief valve and spring for lub. oil	1 set
Special packing for each kind	1/4 eng.
O ring of each kind	1/4 eng.
Main bearing for turbocharger	1 eng.
Packing for rotor shaft of turbocharger	1 eng.

Other necessary spare parts shall be in accordance with Maker's standard.

14.6 PUMP

(1) Centrifugal pump (for each size of pump)

For Cooling S.W. pump (2 sets) and Jacket cooling F.W. pump (2 sets)

Impeller shaft	1 set
Ball bearing (if fitted)	1 set
Casing ring	1 set
Gland packing	1 set
Coupling bolt and nut (if fitted)	1 set

For Fire & G.S. pump and Bilge & ballast pump

Ball bearing (if fitted)	1 set
Casing ring	1 set
Gland packing	1 set
Coupling bolt and nut (if fitted)	1 set

For Fresh water pump & Drinking water pump (2 sets), Ref. machine C.S.W. pump (1 set), Boiler feed water pump (2 sets), Ballast pump (2 sets), Hot water circ. pump (1 set), Main air comp. cooling F.W. pump (2 sets) and MGO Cooling Fresh Water pump (1 set)

Ball bearing (if fitted)	1 set
Casing ring	1 set
Gland packing or mechanical seal	1 set
Coupling bolt and nut (if fitted)	1 set

For main L.O. pump (2 sets)

Ball bearing (if fitted)	1 set
Casing ring	1 set
Oil seal	1 set
Coupling bolt and nut	1 set

(2) Gear pump (for each size of pump)

For F.O. trans. pump (1 set), D.O. & L.O. trans. pump (2 sets), F.O. boost. pump (2 sets), M/E F.O. circ. pump (2 sets), S/T L.O. pump (2 sets), D/G F.O. circ. pump (2 sets), L.O. Puri. supply pump (1 set) , D/G L.O. puri. supply pump (1 set) and D/G D.O. boost. pump (1 set)

Bearing metal	1 set
Gland packing or mechanical seal	1 set
Safety valve spring	1
Coupling bolt and nut or coupling bush	1 set

(3) Reciprocating pump

For Bilge pump (1 set)

Piston ring	2
Valve and valve seat	4 sets
Gland packing	1 set
Safety valve spring	1
V belt	2

(4) Monros pump

For Sludge pump (1 set)

Ball bearing	1
Safety valve spring	1
Gland packing	1 set
O ring	1
V belt	2

14.7 MAIN AIR COMPRESSOR

1st stage valve complete	1 set
2nd stage valve complete	1 set
Piston ring	1 set
Connecting rod bearing	1 set
Piston pin bush	1 set
Special packing	each 1
Other Maker's standard spare	1 set

14.8 HEAT EXCHANGER

(1) Cooler and condenser (shell & tube type)

Protecting anode	Total number
Packing	1 set

(2) Oil heater

Relief valve spring	each 1

14.9 OTHER MACHINERY

Spare parts for machinery except above shall be in accordance with Maker's standard.

SECTION 15　TOOLS AND OUTFITS

15.1 GENERAL

Tools and outfits shall be provided as necessary for proper maintenance and overhauling of equipment according to Maker's standard.

Smaller tools shall be stowed in suitable boxes with contents on suitable position where convenient to the crew in engine room, but larger ones shall be mounted and stored direcly on the wall of the ship.
Tools and outfits shall include the following at least.
Quantities shall be for one (1) ship.

15.2 MAIN ENGINE

Hydraulic tightening tools with pump	1 set
for cylinder cover stud	
for exhaust valve stud	
for stay bolt	
for main bearing stud	
for crosshead bearing stud	
for crankpin bearing stud	
Grinding machine for exhaust valve spindle and seat	1 set
Fuel valve injection testing device	1 set
Indicator	1 set
Deflection gauge	1 set
Gauge for measuring and adjusting for the engine	1 set
Maker's standard tool for the accessories such as turbocharger, air cooler, governor and aux. blower	1 set
Air driven pump for M/E air cooler cleaning	1 set
Other necessary tools for overhaul and reassembling of the engine	1 set

15.3 SHAFTING AND PROPELLER

Spanner for shaft coupling bolt	each 1

15.4 AUXILIARY BOILER

Tube stopper	12
Standard pressure gauge	1
Water tester	1 set

Other necessary special tools shall be in accordance with Maker's standard.

15.5 DIESEL GENERATOR ENGINE

Special tool for overhauling and reassembling	1 set
Lapping tool for suction and exhaust valves	1 set
Fuel valve testing device	1 set
Cylinder bore gauge	1 set
Deflection gauge	1 set
Indicator	1 set

Other necessary special tools shall be in accordance with Maker's standard.

15.6 HEAT EXCHANGER

For shell & tube type heat exchanger:

Tube expander	each kind 1
Tube cleaning tool	1 set
Brass plug	10

15.7 OTHER MACHINERY

Other necessary special tools for dismantling and assembling shall be in accordance with Maker's standard.

15.8 GENERAL TOOLS AND OUTFITS

Item	No. of set	Remarks
Thermometer (alcohol)	2	100℃
Thermometer (mercury)	1	500℃
Parallel bench vice	1	150 ㎜
Hand lantern	3	
Shackle	Each 2 (total 8)	1, 2, 3, 5 T
Eye bolt	Each 2 (total 8)	M10, M12, M16, M20
Hexagon head bolt & nut	Each 10 (total 40)	M10, M12, M16, M20
Plain washer	Each 10 (total 40)	M10, M12, M16, M20
Split pin	Each 10 (total 30)	2×12 ㎜, 3.2×18 ㎜, 4×25 ㎜
Tap & dies	Each 1 Tap	M6, M8, M10, M12, M16, M20, M24
	Each 1 Dies	M6, M8, M10, M12, M16, M20, M24
Steel tape measure	1	30 m
Scaffolding plate (wood)	2	4000 ㎜×300 ㎜×50 ㎜
Steel plate	Each 2 (total 4)	1.6 ㎜×914 ㎜×1829 ㎜
		3.2 ㎜×914 ㎜×1829 ㎜
Steel bar	Each 2 (total 8)	φ9 ㎜, φ13 ㎜, φ16 ㎜, φ19 ㎜
		Length : 2000 ㎜
Surface plate	1	500 ㎜×500 ㎜
Copper plate or brass plate	1	0.3 ㎜×365 ㎜×1200 ㎜
Listening rod	2	
Valve handle spanner	8	
White board and eraser	4	450 ㎜×600 ㎜
Hand hammer	Each 1 (total 2)	0.91 ㎏, 0.45 ㎏
Steel wire	1	φ1 ㎜ (1 ㎏)
Tool cabinet (in the workshop)	2	

The following machine tools are listed in the Subsection **1.2 MACHNERY PARTICULAR**.

Lathe	1	Center distance 600 ㎜
Drilling machine	1	φ21 ㎜
Grinding machine	1	φ255×25t
Electric welder	2	300Amp
Chain block	1 / 2 / 3	3 ton / 1 ton / 0.5ton
Gas cutting machine	1	Oxygen B.×2, Acetylene B.×1
		Flame arrestor for Acetylene B. × 1
		Flame arrestor for Oxygen B. × 1
		Hose : Each 25m×3