An Attachable Battery–Supercapacitor Hybrid for Large Pulsed Load

Nhat-An Nguyen
Department of Software Convergence,
Soongsil University,
Seoul 06978, South Korea

Hien Vu
Department of Electrical and Computer Engineering,
University of Wisconsin–Madison,
Madison, WI 53706 USA

Massoud Pedram
USC Viterbi School of Engineering,
University of Southern California,
Los Angeles, CA 90089 USA

Donghwa Shin
School of AI Convergence,
Soongsil University,
Seoul 06978, South Korea

Editor's notes:
A battery supercapacitor is a viable hybrid energy-storage system for higher power density, lower cost, and cycle efficiency. This article presents an attachable diode-based battery–supercapacitor hybrid system. The authors provide extensive experimental results on their proposed system.
—Mohammad Abdullah Al Faruque, University of California Irvine

Battery–supercapacitor hybrid power systems provide the opportunity to combine the higher energy density and the lower dollar cost of chemical batteries with the higher power density and cycle efficiency of supercapacitors while hiding their weaknesses. Using supercapacitors along with batteries in systems with frequent charge–discharge cycles extends the battery service life by responding to the high-load current demand. The supercapacitors (supercaps) in these systems store any surplus energy from the battery during low-load demand periods [1]. Supercapacitors have a higher power capacity with a much lower internal resistance compared to batteries; therefore, they can be used to temporarily boost the power capacity of the system.

Digital Object Identifier 10.1109/MDAT.2022.3177709
Date of publication: 25 May 2022; date of current version: 2 September 2022.

However, supercapacitors have a much higher self-discharge rate compared to batteries, which severely degrades the lifespan of the batteries under storage conditions when they are connected to the rest of the system [1]. Battery–supercapacitor hybrid structures can enhance the power capacity, but at the same time, they often suffer from a lower energy capacity owing to the self-discharge current of the supercapacitor, which dissipates the battery energy when these two components are permanently connected. Several attempts have been made to solve this problem by adopting an attachable hybrid structure [2]. The attachable structure allows the supercapacitors to be connected only when power boosting is required and removes the self-discharge problem.

Hybrid energy-storage system (HESS) devices have been developed in many forms and designs. Each design serves a specific system or optimizes the benefit of using power. HESS devices have been used to increase the power harvesting efficiency of renewable power systems such as wind turbines and

2168-2364/22©2022 IEEE Copublished by the IEEE CEDA, IEEE CASS, IEEE SSCS, and TTTC

Authorized licensed use limited to: University of Wisconsin. Downloaded on October 26,2023 at 20:14:14 UTC from IEEE Xplore. Restrictions apply.

photo-voltage cells. Smaller versions of HESS have been developed for electric vehicles [3]. Nevertheless, the design of small-size HESS devices for microelectronic systems or applications is negligible. This may be due to the low demand for very high power in such applications. In addition, the gravimetric size of batteries and the volumetric size of the supercapacitors have made such small-size HESS devices unattractive. However, with the rise in intermittent very high-power demand in microelectronic circuits and systems and the trend of developing smaller (and more flexible) supercapacitors [4] and batteries, there is both a need and new opportunity to develop a small and flexible HESS device.

In the first part of this article, we introduce the design of the attachable hybrid module. The module consists of a supercapacitor array with a proper series and parallel structure matching the expected load, a diode to prevent the unwanted charge current from the battery to the supercapacitor, and a controllable charger circuit for the initial charging of the supercapacitor array. In the second part, we introduce the design of the hybrid system in a form of a conformal wearable battery (CWB). The design also has a low (volumetric) size and weight and is also designed as a flexible (bendable) module, which increases the possibility of using it in future design and application, especially for a wearable device (like a belt). The experimental results show that the prototypes are able to provide a high amplitude of the current (up to 100 A) for a short time (up to 5 s), as required by the target load profile.

Background

Hybrid systems of batteries and supercapacitors have been developed and applied in many fields, such as increasing the use time of electrochemical batteries in electric vehicles [5], or energy-storage systems in a wind turbine system to increase energy efficiency [6]. By using an ultracapacitor, Kok et al. [7] demonstrated that they can protect the battery from the peak current and improve its drive capability, efficiency, and life.

To increase the effectiveness of the hybrid system, a study to isolate supercapacitors from batteries using a constant charger was done in [8]. The hybrid power supply was also used in portable embedded systems in [9], where the authors optimized the system efficiency by doing cooperative power management on both the supply and consumption sides. The parallel supercapacitors configuration faces challenges such as large balancing voltage circuits, large converters, a small range of high efficiency of boost converters, and large diminishing voltage during low discharging. To resolve these issues, a constant-current regulator-based battery–supercapacitor hybrid architecture was proposed in [1]. A conventional implementation was used to isolate the supercapacitor from the battery so that one can reduce the rate capacity effect even with a small supercapacitor.

Attachable battery–supercapacitor hybrid structure using boost converter and diode for extensive current pulse delivery

Proposed hybrid system

In the design of the attachable structure, the connection of the battery and supercapacitor is crucial for efficiency and safety because it should be able to handle a large amount of input and output power. A resistor-based connection method is typically used in commercial products. Some diode- or charger-based structures have also been proposed [10]. We can intuitively see that the resistor-based connection cannot fully utilize the potential of supercapacitor. Without boost converter and a proper circuit to drive the power from both the battery and the supercapacitor, the efficiency of HESS is limited and largely depend on the capacitance. The use of a boost converter allows us to expand the available energy stored in a supercapacitor array.

A comparison of four HESS structures is shown in Table 1: parallel connection, dual-diode ORing, current regulator, and our proposed structure. The first viewpoint to compare these structures is attachability. Parallel connection, dual-diode ORing, and the proposed design of HESS are attachable (alternatively, detachable) because of the way their components connect with each other. We can remove the supercapacitor and its supported circuits without causing any significant effects on the remaining system. In contrast, the current-regulator cannot be detached from any component in the target HESS device. The other figures of merit are the peak current capacity, supercapacitor operating range, and hybrid efficiency; these perspectives are critical when evaluating an HESS. In all three aspects, the parallel connection structure is the weakest. In this structure, the supercapacitor is simply used as a low-pass filter, which

Authorized licensed use limited to: University of Wisconsin. Downloaded on October 26,2023 at 20:14:14 UTC from IEEE Xplore. Restrictions apply.

Table 1. Comparison between hybrid energy-storage structures.

Features	Parallel connection [11]	Dual-diode ORing	Current Regulator [1]	Proposed HESS
Self discharge rate	○	○	Unavoidable	○
Attach ability	Attachable	Attachable	×	Attachable
Initial charge efficiency	Low	High	High	High
Peak current capacity	Low	High	Moderate	Excellent
Hybrid efficiency	Low	High	Moderate	Excellent
Supercap. operating range	Low	High	High	High
Energy after use	Bleeding	High	High	High
Circuit complexity	High	High	Moderate	High

helps the battery maintain voltage stability. Without any support from the auxiliary circuits, the effect of the supercapacitor is highly dependent on its own capacitance. Even though the capacitance of a supercapacitor can be very high which can be effective in meeting the high demand of parallel connection structures, this makes the design inflexible. Moreover, the supercapacitor cost tends to increase sharply with an increase in the capacitance value. In comparison, with the support of parasitic components or circuits, the remaining structures achieve higher peak current capacity, supercapacitor operating range, and hybrid efficiency, especially in the structure proposed in this article. The main challenge of this hybrid system is to provide a high current of up to 100 A for a duration of 5 s. For this purpose, we present a hybrid battery–supercapacitor system connected via a diode-or circuit to provide the desired peak current pulse. Figure 1a shows the battery–supercapacitor and diode-or circuits. Our proposed design has two modes of operation: normal load current condition and peak load current condition as discussed below.

Hybrid operations

Normal load current condition

The battery serves as the primary power source for the load when the output voltage of the battery is higher than the clamping voltage. Subject to the effective range of the battery output current, the supercapacitor array is charged up to a level that is slightly lower than the clamping voltage. The boost converter, which is connected to the output of the supercapacitor array, produces a voltage level matching the predetermined clamping voltage. The clamping voltage is set to a value to prevent overdischarging of the battery, which is based on the current–voltage relation of the battery considering its state of charge (SoC) and state of health (SoH).

Peak load current condition

When the voltage of the battery reaches the aforementioned clamping voltage level, the diode-or circuit switches to the output of the boost converter. At this point, the output voltage and hence the output current of the battery remain fixed. From this point, the supercapacitor array then provides any extra current required by the load through the boost converter. As the supercapacitor array is discharged, the output voltage of the supercapacitor decreases. However, if the supercapacitor output voltage remains within the allowed input voltage range of the boost converter, the converter will continue to provide voltage regulation at its output. Thus, the supercapacitor array supplies the required extra load current. When the duration of the peak load current period becomes too long, the boost converter loses regulation; hence, the diode-or circuit switches back to the output of the battery, which will subsequently fall below the target clamped voltage level. Alternatively, when the peak load current period ends before the boost converter loses the output voltage regulation (this scenario is preferable), the constant-current charger will have the opportunity to charge the supercapacitor array during on-peak load current period.

Implementation

Custom hardware implementation

At the beginning, we implement a demo prototype of the battery–supercapacitor hybrid system. The demo prototype includes a supercapacitor array, a Li-ion battery, a 50-A ideal diode-or circuit, a microcontroller unit (MCU) (MSP430FR4133), a digital potentiometer, a 1.5-A constant-current constant-voltage charger, a 24–3.3-V step-down converter, a 100-A output current boost converter, and other parasitic elements. The physical dimensions of this demo system box were 450 mm × 330 mm × 180 mm.

After installing the demo prototype and conducting successful simulations, we designed circuits that combine all the component boards and have the

Authorized licensed use limited to: University of Wisconsin. Downloaded on October 26,2023 at 20:14:14 UTC from IEEE Xplore. Restrictions apply.

proper size for our application. The requirement was to make the electric board fit a space of 60 mm × 110 mm with a thickness of 19 mm. To ensure size requirements, we designed two boards: 1) controller board and 2) boost converter board. The boards were designed with four layers. Two outer layers were mainly used for the power paths and some signal routes. One inner layer is used only for the signal route, and the remaining inner layer is used for the ground (GND) plane.

1. *Controller board*: Figure 1b shows the top view of the controller board. The blue box area contains two independent *LT C*4359 ideal diode circuits. They have the capability of carrying up to a 20-A current for each channel. Because a current with high density flows on this line, we had to allocate a large space for it and make the power paths between power components as large as possible to ensure that the circuit will be reliable enough to operate normally. At the bottom of the red box area (Figure 1b), we placed the *MSP*430FR4133 with 56 pins and its related components. These parts were laid around the MCU so that they could connect to each other via the shortest signal route. The last part which is shown inside an orange box in Figure 1b is the *LT*1510 charger circuit.
2. *Boost converter board*: The bottom board consists of two parallel LTC3737s (dual-phase synchronous boost converter circuits). Because this circuit operates under high current and high-power conditions, we had to design a power plane for all wires that connect power components. Since we wanted to keep the power and signal pins at the edge of the board, power paths had to be placed along the edge. This forced all components connected to the said power paths to be placed on the edges. And we kept a small area in the center to use for routing the signal wires related to the boost converter *LT*3737. This converter remained at the bottom of the board. By the efforts on the physical design, we have reduced the thickness significantly, as shown in Figure 1c.

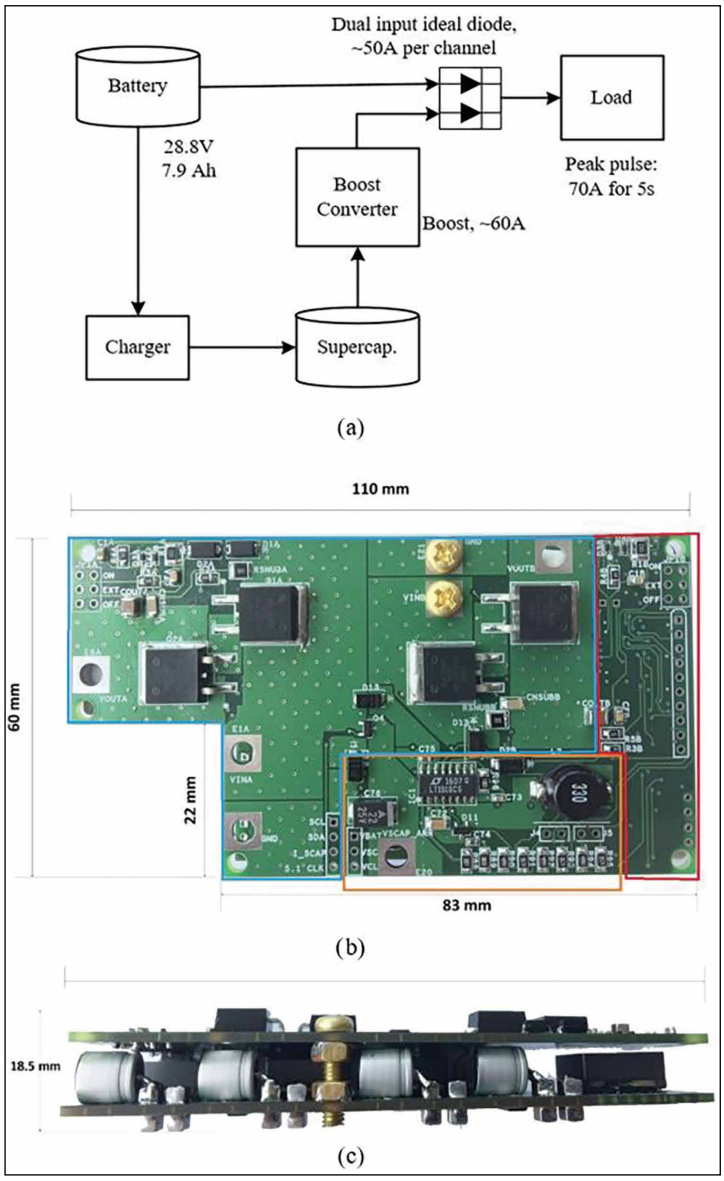

Figure 1. (a) Diagram of the proposed battery–supercapacitor system using a diode-OR circuit. (b) Top view of the controller board. (c) Thickness of the design.

Measurement

We applied a 100-A discharging current by setting the programmable load to the constant-current mode. Figure 2 shows the voltage of the battery, supercapacitor, and hybrid system in this high-current supply experiment. At the onset, the battery terminal voltage is approximately 28 V. Following the application of a pulse current with an amplitude of 100 A, the battery voltage decreases. However, the voltage drop is limited to approximately 23 V by the clamping operation of the diode-or-based hybrid setup. The terminal voltage of the supercapacitor array approximately reaches 7 V after 5.6 s of discharging current. On average, the load draws 2.2-kW power on the current pulse

Authorized licensed use limited to: University of Wisconsin. Downloaded on October 26,2023 at 20:14:14 UTC from IEEE Xplore. Restrictions apply.

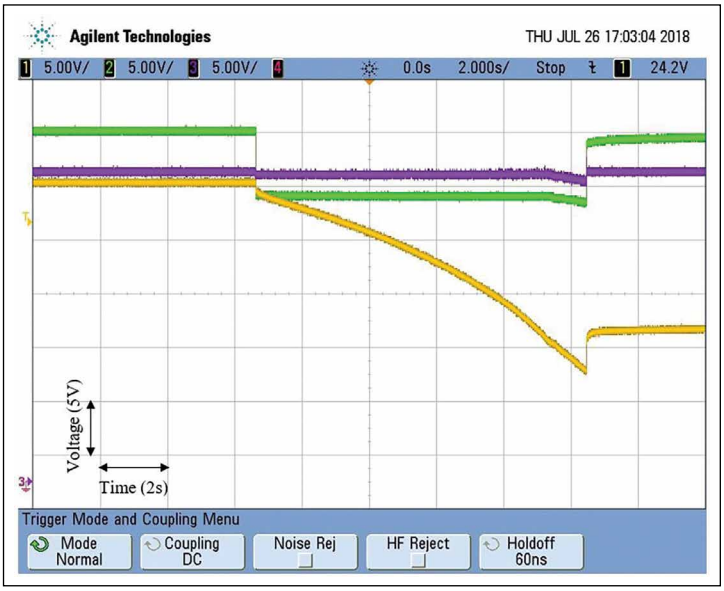

Figure 2. Voltage of the battery, supercapacitor, and the hybrid system in delivering an extensive 100-A current to the load.

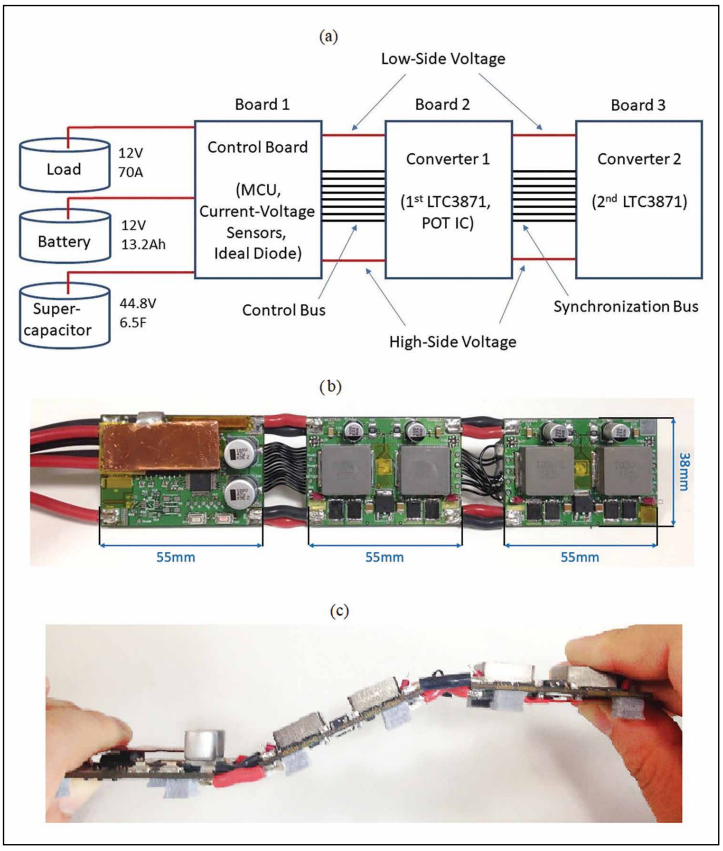

Figure 3. (a) Board configuration. (b) Prototype. (c) Flexibility test.

duration. The battery and supercapacitor array contribute 0.97 and 1.23 kW, respectively, in the power delivered to the load. The prototype delivers 100 A with a 7.9-Ah nominal capacity battery, which is up to 12.5 C discharging of the battery. Except for several specialized high discharging capacity batteries, the safe discharging range of Li-ion batteries is up to approximately 5 C. The proposed hybrid setup suppresses the battery current within a safe range while supplying a load current higher than 12 C.

Flexible design for hybrid power system

System configuration

Originally, we used an ideal diode to protect the battery pack from the effects of converter operation, and another MOSFET driver to turn on or off the output power of this system. The ideal diode is a combination of two MOSFETs and an IC controller. With a load of 30 A passing through the two MOSFETs, it causes a loss of 3.6 W owing to the MOSFETs' internal resistance. After evaluating the system operation, because of the high-precision voltage control of the converter, we decided to remove the ideal diode while ensuring the appropriate operation of the battery pack while reducing the loss and complexity of this system. We devised a three-circuit connected arrangement based on the HESS-CWB specifications, as shown in Figure 3a. Each block included the major components of each board.

Prototype and implementation

Physical properties of demo prototype

The design of these boards complied with special layout consideration from the LTC3871/LTC3871-1 datasheet from the manufacturer. Top and front views of the prototype are shown in Figure 3b. The dimensions of each board are 55 mm in length and 38 mm in width, with a maximum height of 18 mm at the capacitors of the control board. A ground layer separates high-switching-frequency areas such as MOSFETs and inductors sensitive current-sensing components. These boards are connected by ultraflexible power cables that allow them to be bent at different angles, ensuring the flexibility and reliability of this system.

Authorized licensed use limited to: University of Wisconsin. Downloaded on October 26,2023 at 20:14:14 UTC from IEEE Xplore. Restrictions apply.

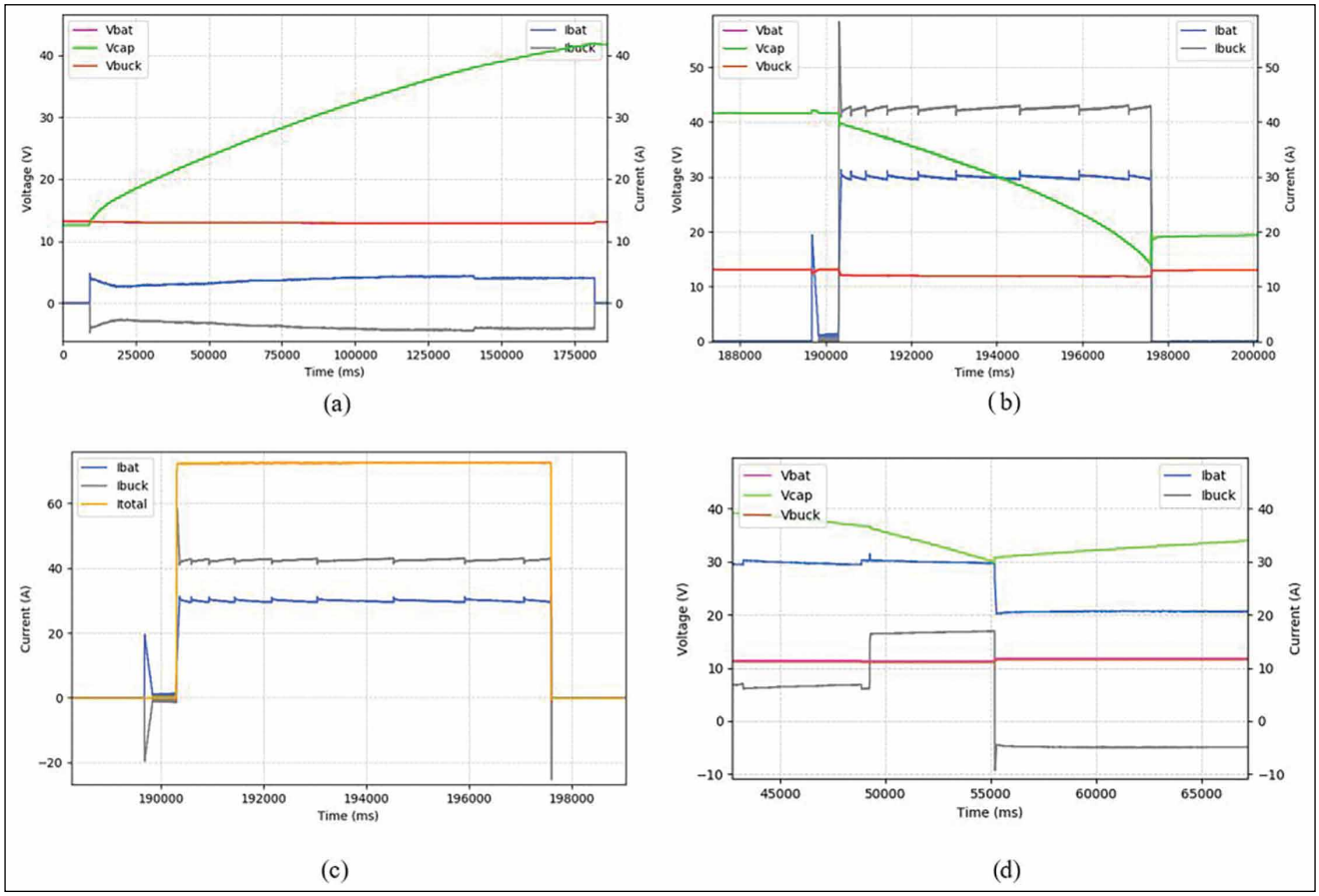

Figure 4. (a) Charging stage for 44.8 V 6.5 F supercapacitor pack. (b) Discharging results. (c) Discharging currents. (d) Charge for supercapacitor pack during small load.

Implementation

In this implementation, we used commercial supercapacitors (2.8 V 100 F) for each unit. As a result, our prototype archived 7.3 s of 12-V 70-A discharging, which is longer than the customer-specified, required working time of HESS-CWB system. The complete testbed for this prototype contains one 12-V 13.2-Ah battery, a 44.8-V 6.5 F supercapacitor pack, a demo prototype, and one debugger for realtime monitoring. The MCU on the control board carries out all measurements every millisecond with a precision of ±0.1 V and ±0.1 A.

System testing

Overview of system operation

In this testing process, because of the 2.5 times larger supercapacitor capacity, the system's temperature when connected to ADA Technologies, Inc. (ADA) devices will be much smaller, and the system will spend less time in operation. The results for one charging and discharging cycle are shown in Figure 4. During charging, because the converter works in a constant-input current boost mode, the generated heat in the converters comes from the last stage of charging because a smaller output current leads to lower efficiency. In the current-testing supercapacitor pack, the temperature reached 65 °C. With the ADA's pack, which is 2.5 times smaller than the capacity, the charging process is expected to be approximately 70 s, and the temperature could be approximately 30 °C after the first cycle.

Charging and discharging

During the charging phase in Figure 4a, the converter charges the supercapacitor pack with a constant current of 4 A (blue line), which results in 170 s until the pack reaches 42 V (green line). In the discharging process shown in Figure 4b, the controller

Authorized licensed use limited to: University of Wisconsin. Downloaded on October 26,2023 at 20:14:14 UTC from IEEE Xplore. Restrictions apply.

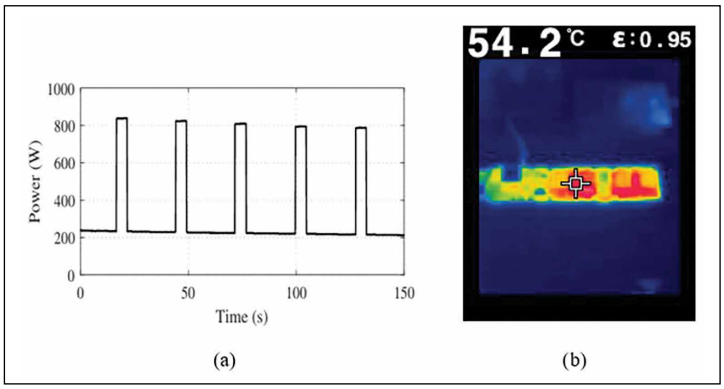

Figure 5. (a) Continuous power supply operation. (b) Temperature of the converter at the fifth cycle.

continuously measures and adjusts the buck output voltage to maintain the battery discharging current around 30 A. This regulation lasts for 7.3 s until the supercapacitor pack voltage is smaller than 14.5 V.

The battery, supercapacitor pack, and total discharging currents are illustrated separately in Figure 4c.

Immediately before beginning to discharge, the MCU changes the converter configuration to buck mode, adjusts the converter's output voltage, and stabilizes the currents. After reaching a steady state (at the 190th second in Figure 4c), the MCU opens the output port and starts the discharging process. If any faults are detected in this period, the converter will be shut down immediately, and the system will stop operation. The MCU also has an internal watchdog timer to automatically reboot and keep it safe if any errors appear during the operation.

Discharging at different loads

After programming and testing, the prototype can charge at a constant current, discharge from 10 to 70 A, while the maximum battery current remains smaller than 30 A in all cases and charge for the supercapacitor pack when the total load current for discharging is smaller than 30 A. Three load values of 36, 46, and 15 A are illustrated in Figure 4d corresponding to three levels of I_{buck} (gray line—the output current from the converter). The output current is the sum of I_{bat} (battery discharge current) and I_{buck}. In 36 and 46 A discharging, 30 A of the load is covered by the battery, and the remaining 5 and 15 A were obtained from the converter. In this figure, from the 55th second, the load is set at 15 A when I_{bat} = 20 A and I_{buck} = –5 A. Here, I_{buck} decreased to a negative value, indicating that the supercapacitor pack was being charged. This charging process is stopped once the supercapacitor pack voltage (green line) reaches 42 V or by the MCU operation.

Thermal test

We have tested the thermal aspect of the prototype. It is important in terms of applicability as well as not only durability since it is expected to be assembled in a wearable system. We have applied continuous charging–discharging cycles with the maximum discharge pulses as shown in Figure 5a at room temperature (22 °C). The temperature rises rapidly where it is discharged with the maximum load. We observed that the temperature of the converter, battery, and supercapacitor converged after the fifth cycle of discharge.

The temperature of each supercapacitor cell increases by 7.4 °C at the fifth discharge. The battery cell temperature increases somewhat smaller by 3.1 °C. The converter temperature reaches 54.2 °C after the fifth cycle as shown in Figure 5b. All the temperature values stay within the safe ranges of the components with maximum load conditions. It is also reasonable for the wearable application considering the fact that the temperature of internal components in a cell phone is around 50 °C during the operation.

The hybrid system is designed to deliver an extreme pulse current with large amplitude to the load for a short time. The first design of HESS in this study was developed to fit the model BB-2590/U (high capacity 298-Wh rechargeable Li-ion battery with SMBus). The implemented prototype delivers 100 A with a 7.9-Ah nominal capacity battery, which is up to 12.5 °C discharging of the battery while suppressing the actual discharging current of the battery within the safe range. A flexible circuit design was proposed for the wearable batteries. It is not only reduced in size and weight compared to the first prototype, but is also designed to become a flexible device. The flexible design is compatible with commercial flexible battery packs, such as CW150 (FlexPack: Flexible, Safe Warfighter Conformable Wearable Battery). As in our experiment, the output of our HESS can reach a maximum of 70 A at 12 V, which is approximately 700-W power. To the best of our knowledge, it is the first attempt to put the solid batteries and supercapacitors in a

Authorized licensed use limited to: University of Wisconsin. Downloaded on October 26,2023 at 20:14:14 UTC from IEEE Xplore. Restrictions apply.

wearable shape with hybrid power circuitry. The hybrid power path design can be used in many other applications with advantages in terms of size and flexibility. ■

Acknowledgments

This work was supported by the National Research Foundation of Korea (NRF) through the Korea Government (MSIT) under Grant NRF-2020R1A4A4079859.

References

[1] D. Shin et al., "Constant-current regulator-based battery-supercapacitor hybrid architecture for high-rate pulsed load applications," *J. Power Source*, vol. 205, pp. 516–524, May 2012.

[2] Amin et al., "Energy management of fuel cell/battery/supercapacitor hybrid power sources using model predictive control," *IEEE Trans. Ind. Informat.*, vol. 10, no. 4, pp. 1992–2002, Nov. 2014.

[3] T. Bocklisch, "Hybrid energy storage systems for renewable energy applications," *Energy Proc.*, vol. 73, pp. 103–111, Jan. 2015.

[4] W. K. Chee et al., "Flexible graphene-based supercapacitors: A review," *J. Phys. Chem. C*, vol. 120, no. 8, pp. 4153–4172, 2016.

[5] L. Kouchachvili, W. Yaïci, and E. Entchev, "Hybrid battery/supercapacitor energy storage system for the electric vehicles," *J. Power Sources*, vol. 374, pp. 237–248, Jan. 2018.

[6] W. Li and G. Joós, "A power electronic interface for a battery supercapacitor hybrid energy storage system for wind applications," in *Proc. IEEE Power Electron. Spec. Conf. (PESC)*, Jun. 2008, pp. 1762–1768.

[7] D. Kok, A. Morris, and M. Knowles, "Novel EV drive train topology—A review of the current topologies and proposal for a model for improved drivability," in *Proc. 15th Eur. Conf. Power Electron. Appl. (EPE)*, Sep. 2013, pp. 1–10.

[8] D. Shin et al., "Battery-supercapacitor hybrid system for high-rate pulsed load applications," in *Proc. Design, Autom. Test Eur.*, Mar. 2011, pp. 1–4.

[9] X. Lin et al., "Power supply and consumption co-optimization of portable embedded systems with hybrid power supply," in *Proc. IEEE 32nd Int. Conf. Comput. Design (ICCD)*, Oct. 2014, pp. 477–482.

[10] M. Ortuzar, J. Moreno, and J. Dixon, "Ultracapacitor-based auxiliary energy system for an electric vehicle: Implementation and evaluation," *IEEE Trans. Ind. Electron.*, vol. 54, no. 4, pp. 2147–2156, Aug. 2007.

[11] I. J. Cohen et al., "Evaluation of an actively contolled battery-capacitor hybrid energy storage module (HESM) for use in driving pulsed power applications," in *Proc. IEEE Pulsed Power Conf. (PPC)*, May 2015, pp. 1–5.

Nhat-An Nguyen is pursuing a PhD with the Department of Software Convergence, Soongsil University, Seoul, South Korea. His research interests include low-power embedded system application, hybrid power system design, and hardware security application. Nguyen has an MS in computer engineering from Yeungnam University, Gyeongsan, South Korea.

Hien Vu is pursuing a PhD in computer engineering with the University of Wisconsin–Madison, Madison, WI, USA. His research interests include hybrid-power system design, battery management, and cyber–physical systems. Vu has an MS in computer science from Soongsil University, Seoul, South Korea.

Massoud Pedram is the Charles Lee Powell Professor of Electrical Engineering and Computer Science with the USC Viterbi School of Engineering, University of Southern California, Los Angeles, CA, USA. His research interests include computer-aided design of VLSI circuits and systems, low power electronics, energy-efficient processing, electrical energy-storage systems, machine learning accelerator design, quantum computing, and superconductive electronics. Pedram has a PhD in electrical engineering and computer sciences from the University of California at Berkeley, Berkeley, CA, USA. He is a Fellow of IEEE.

Donghwa Shin is an associate professor with the School of AI Convergence, Soongsil University, Seoul, South Korea. His research interests include system-level low-power techniques for embedded systems and hybrid power system design. Shin has PhD degrees in computer science and electrical engineering from Seoul National University, Seoul. He is a Senior Member of IEEE.

■ Direct questions and comments about this article to Donghwa Shin, School of AI Convergence, Soongsil University, Seoul 06978, South Korea; donghwashin@ssu.ac.kr.

Authorized licensed use limited to: University of Wisconsin. Downloaded on October 26,2023 at 20:14:14 UTC from IEEE Xplore. Restrictions apply.