MASTER OF COMPUTER APPLICATIONS (MCA_NEW)

MCA_NEW 1st Semester Assignments

(January, 2026 & July, 2026 sessions)

MCS-211, MCS-212, MCS-213, MCS-214, MCS-215

MCSL-216, MCSL-217

SCHOOL OF COMPUTER AND INFORMATION SCIENCES
INDIRA GANDHI NATIONAL OPEN UNIVERSITY
MAIDAN GARHI, NEW DELHI – 110 068

CONTENTS

Course Code	Assignment No.	Submission-Schedule		Page No.
		For January-June Session	For July-December Session	
MCS-211	**MCA_NEW(I)/211/Assignment/2026**	**30th April, 2026**	**31st October, 2026**	**3**
MCS-212	**MCA_NEW(I)/212/Assignment/2026**	**30th April, 2026**	**31st October, 2026**	**6**
MCS-213	**MCA_NEW(I)/213/Assignment/2026**	**30th April, 2026**	**31st October, 2026**	**8**
MCS-214	**MCA_NEW(I)/214/Assignment/2026**	**30th April, 2026**	**31st October, 2026**	**9**
MCS-215	**MCA_NEW(I)/215/Assignment/2026**	**30th April, 2026**	**31st October, 2026**	**12**
MCSL-216	**MCA_NEW(I)/L-216/Assignment/2026**	**30th April, 2026**	**31st October, 2026**	**14**
MCSL-217	**MCA_NEW(I)/L-217/Assignment/2026**	**30th April, 2026**	**31st October, 2026**	**16**

Important Notes

1. Submit your assignments to the Coordinator of your Study Centre on or before the due date. Also, be in touch with concerned IGNOU RC for any updates regarding assignments schedule etc.
2. Assignment submission before due dates is compulsory to become eligible for appearing in corresponding Term End Examinations. For further details, please refer to Programme Guide of MCA_NEW.
3. To become eligible for appearing the Term End Practical Examination for the lab courses, it is essential to fulfill the minimum attendance requirements as well as submission of assignments (on or before the due date). For further details, please refer to the Programme Guide of MCA_NEW.
4. The viva voce is compulsory for the assignments. For any course, if a student submitted the assignment and not attended the viva-voce, then the assignment is treated as not successfully completed and would be marked as ZERO.

Course Code	**:**	**MCS-212**
Course Title	**:**	**Discrete Mathematics**
Assignment Number	**:**	**MCA_NEW(I)/212/Assign/2026**
Maximum Marks	**:**	**100**
Weightage	**:**	**30%**
Last Dates for Submission	**:**	**30th April 2026 (for January Session)** **31st October 2026 (for July Session)**

This assignment has twenty questions of 80 Marks; all questions carry equal marks i.e. 4 marks. Answer all questions. Rest 20 marks are for viva voce. You may use illustrations and diagrams to enhance the explanations. Please go through the guidelines regarding assignments given in the Programme Guide for the format of presentation.

Q1: Use Mathematical Induction to prove that : $1^2 + 2^2 + \ldots\ldots + n^2 = n(n+1)(2n+1)/6$

Q2: How many different permutations are possible of the letters, taken all at a time, of the word: ASSESSES?

Q3: A die is rolled once. What are the probabilities of the following events:

a. Gettinganoddnumber
b. Gettingatleastavalue2
c. Gettingatmostavalue2
d. Gettingatleast7

Q4: Draw a hypercube graph Q_3(also called the cubical hypercube). Check whether the hypercube Q3 is Hamiltonian

Q5: What is isomorphism? Find, if the following graphs G_1 and G_2 are isomorphicornot. Explain how you arrived at your answer.

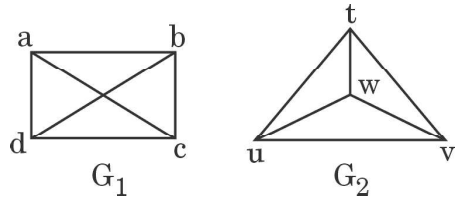

Q6: What is a finite automata ? Why is it needed? How is a finite automata represented?. Also explain the term regular expression with the help of an example.

Q7: Differentiate between

a. Deterministic and Non-deterministic finite automata
b. Deterministic and Non-deterministic Turing Machine
c. Moore and Mealy Machine

Q8: Describe the divide-and-conquer approach to solve recurrences ? Explain how this approach can be used toapplybinarysearchinasortedlist.

Q9: What is proposition ? Explain with the help of an example. Explain Disjunction and Conjunction with the help of truth table for each.

Q10: Prove the following theoremby direct proof method: ‘‘The squareofanevenintegerisaneven integer.’’

Q11: Given the Boolean expression$(a' \vee (b \wedge c')) \vee (b \vee d')$,draw the corresponding circuit, where a, b, c and d

are the inputs to the circuitry.

Q12: Define the terms Domain, Co-domain and Range in the context of a function. Also find the domain, co-domain and range for a function A to B , where A={1,2,3,4}and B={1,4,9,16,25}.

Q13: A committee consisting of 2 male and 2 female workers is to be constituted from 8 male and 9 female workers. In how many distinct ways can this be done?

Q14: In a tennis tournament, each entrant plays a match in the first round. Next, all winners from the first round play a second-round match. Winners continue to move on to the next round, until finally only one player is left as the tournament winner. Assuming that tournaments always involve $n = 2^k$ players, for some k, find the recurrence relation for the number rounds in a tournaments of n players.

Q15: Show, using the pigeonhole principle, that in any group of 30 people, 5 people can always be found who were born on the same day of the week.

Q16: Define the following in the context of graph, with the help of an example:

a. Complete graph
b. Degree of a vertex
c. Cycle
d. Path
e. Circuit

Q17: What is a bipartite graph ? Explain with the help of an example. Give one or two applications of bipartite graphs.

Q18: How Hamiltonian graphs differ from the Eulerian graphs? Give Dirac's and Ore's criterion for the Hamiltonian graphs.

Q19: Differentiate between Eulerian graph and Eulerian circuit.Find the Eulerian circuit in the graph given below(if it exists).

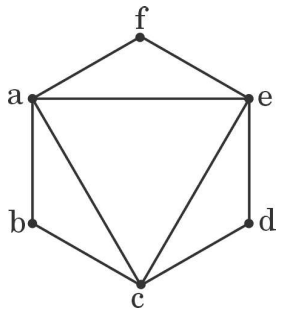

Q20: Write Short notes on following.

a. Travelling Salesman Problem
b. Vertex Coloring
c. Edge Coloring
d. Planar graphs
e. Pascal's Formula

ignouhub.com

Course Code : MCS-212
Course Title : Discrete Mathematics
Assignment Number : MCA_NEW(L)/212/Assign/2026
Maximum Marks : 100
Weightage : 30%
Last Date of Submission : 30th April, 2026 (for January session)
31st October, 2026 (for July session)

ignouhub.com

This assignment has twenty questions of 80 Marks; all questions carry equal marks i.e. 4 marks. Answer all questions. Rest 20 marks are for viva voce. You may use illustrations and diagrams to enhance the explanations. Please go through the guidelines regarding assignments given in the Programme Guide for the format of presentation.

Q1: Use Mathematical Induction to prove that : $1^2 + 2^2 + \ldots\ldots\ldots + n^2 = n(n+1)(2n+1)/6$

Solution: Step 1: Base Case (n = 1)

LHS = $1^2 = 1$

RHS =

$$\frac{1(1+1)(2\times 1+1)}{6} = \frac{1\times 2\times 3}{6} = \frac{6}{6} = 1$$

Since LHS = RHS, the statement is true for **n = 1**.

Step 2: Induction Hypothesis

Assume the formula is true for $n = k$, i.e.,

$$1^2 + 2^2 + \cdots + k^2 = \frac{k(k+1)(2k+1)}{6}$$

PINAKA PUBLICATION Estd. 2019 92882-92884
IGNOU All Courses Solved Assignment PDFs/ Handwritten Scanned PDFs , Solved PYQs, Guess Papers, Help & Guide Books Available.
WhatsApp: 92882 92884

ignouhub.com

Step 3: Inductive Step (For n = k + 1)

We must prove:

$$1^2 + 2^2 + \cdots + k^2 + (k+1)^2 = \frac{(k+1)(k+2)(2k+3)}{6}$$

Using the induction hypothesis:

$$= \frac{k(k+1)(2k+1)}{6} + (k+1)^2$$

Take $(k+1)$ common:

$$= (k+1)\left[\frac{k(2k+1)}{6} + (k+1)\right]$$

Take LCM:

$$= (k+1)\left[\frac{k(2k+1) + 6(k+1)}{6}\right]$$

$$= (k+1)\left[\frac{2k^2 + k + 6k + 6}{6}\right]$$

$$= (k+1)\left[\frac{2k^2 + 7k + 6}{6}\right]$$

Factorize:

$$2k^2 + 7k + 6 = (2k+3)(k+2)$$

So,

$$= \frac{(k+1)(k+2)(2k+3)}{6}$$

This is the required RHS for $n = k + 1$.

Conclusion

Since the statement is true for $n = 1$ and true for $k + 1$ whenever it is true for k, by **Mathematical Induction**,

PINAKA PUBLICATION Estd. 2019 92882-92884
IGNOU All Courses Solved Assignment PDFs/ Handwritten Scanned PDFs , Solved PYQs, Guess Papers, Help & Guide Books Available.
WhatsApp: 92882 92884

ignouhub.com

$$1^2 + 2^2 + \cdots + n^2 = \frac{n(n+1)(2n+1)}{6}$$

Hence proved. ✔

Q2: How many different permutations are possible of the letters, taken all at a time, of the word: ASSESSES?

Solution: First, count the total number of letters in the word:

Word: **ASSESSES**
Total letters = 8

Now count repeated letters:

- A = 1
- S = 5
- E = 2

Since some letters are repeated, the number of distinct permutations is given by:

$$\text{Number of permutations} = \frac{n!}{p_1!\ p_2!\ p_3!}$$

where

$$n = 8$$

$p_1 = 5$ (S's),
$p_2 = 2$ (E's),
$p_3 = 1$ (A)

$$= \frac{8!}{5!\ 2!\ 1!}$$

$$= \frac{40320}{(120)(2)(1)}$$

$$= \frac{40320}{240}$$

$$= 168$$

IGNOU All Courses Solved Assignment PDFs/ Handwritten Scanned PDFs , Solved PYQs, Guess Papers, Help & Guide Books Available.
WhatsApp: 92882 92884

ignouhub.com

Final Answer:

$$\boxed{168}$$

Therefore, **168 different permutations** are possible. ✔

Q3: A die is rolled once. What are the probabilities of the following events:

a. Getting an odd number

b. Getting at least a value 2

c. Getting at most a value 2

d. Getting at least 7

Solution: A fair die has 6 equally likely outcomes:

$$S = \{1,2,3,4,5,6\}$$

$$\text{Total outcomes} = 6$$

(a) Getting an odd number

Odd numbers on a die:

$$\{1,3,5\}$$

Number of favorable outcomes = 3

$$P(\text{odd}) = \frac{3}{6} = \frac{1}{2}$$

(b) Getting at least a value 2

"At least 2" means ≥ 2

Favorable outcomes:

$$\{2,3,4,5,6\}$$

Number of favorable outcomes = 5

$$P(\geq 2) = \frac{5}{6}$$

IGNOU All Courses Solved Assignment PDFs/ Handwritten Scanned PDFs , Solved PYQs, Guess Papers, Help & Guide Books Available.
WhatsApp: 92882 92884

ignouhub.com

(c) Getting at most a value 2

"At most 2" means ≤ 2

Favorable outcomes:

$$\{1,2\}$$

Number of favorable outcomes = 2

$$P(\leq 2) = \frac{2}{6} = \frac{1}{3}$$

(d) Getting at least 7

A die has maximum value 6.
There is **no outcome** $\geqslant 7$.

Favorable outcomes = 0

$$P(\geq 7) = \frac{0}{6} = 0$$

Final Answers:

a) $\frac{1}{2}$
b) $\frac{5}{6}$
c) $\frac{1}{3}$
d) 0 ✓

Q4: Draw a hypercube graph Q3 (also called the cubical hypercube). Check whether the hypercube Q3 is Hamiltonian.

Solution: 1. Hypercube Graph Q_3

IGNOU All Courses Solved Assignment PDFs/ Handwritten Scanned PDFs , Solved PYQs, Guess Papers, Help & Guide Books Available.
WhatsApp: 92882 92884

ignouhub.com

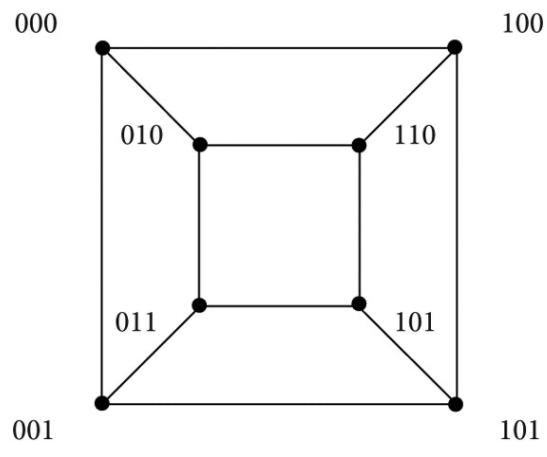

A **hypercube graph** Q_n has:

- 2^n vertices
- Each vertex represented by an n-bit binary string
- Two vertices are adjacent if their binary labels differ in exactly one bit

For Q_3:

- Number of vertices = $2^3 = 8$
- Vertices:

$$\{000,001,010,011,100,101,110,111\}$$

The graph Q_3 forms a **cube**.

2. Hamiltonian Property

A graph is **Hamiltonian** if it contains a **Hamiltonian cycle**, i.e.,
a cycle that visits every vertex exactly once and returns to the starting vertex.

In Q_3, one Hamiltonian cycle is:

$$000 \to 001 \to 011 \to 010 \to 110 \to 111 \to 101 \to 100 \to 000$$

- All 8 vertices are visited exactly once
- Start and end vertex is same
- Hence it forms a Hamiltonian cycle

IGNOU All Courses Solved Assignment PDFs/ Handwritten Scanned PDFs , Solved PYQs, Guess Papers, Help & Guide Books Available.
WhatsApp: 92882 92884

ignouhub.com

3. Conclusion

Since Q_3 contains a Hamiltonian cycle,

$$\boxed{Q_3 \text{ is Hamiltonian}}$$

✔ Hence proved.

Q5: What is isomorphism? Find, if the following graphs G1 and G2 are isomorphic or not. Explain how you arrived at your answer.

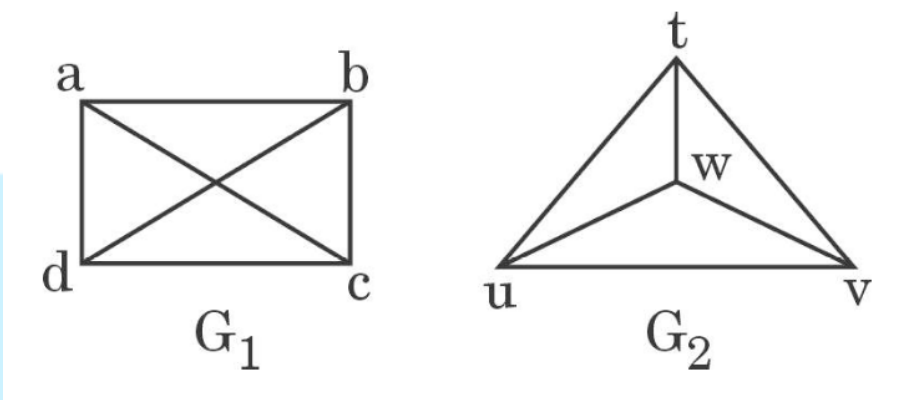

Solution: 1. Definition of Isomorphism

Two graphs G_1 and G_2 are said to be **isomorphic** if there exists a one-to-one and onto mapping between their vertex sets that preserves adjacency.

That is, if vertices u and v are adjacent in G_1, then their corresponding vertices in G_2 are also adjacent.

2. Analysis of the Given Graphs

From the figure:

Graph G_1:

- Vertices: a, b, c, d
- Edges: All outer edges of a rectangle + two diagonals

IGNOU All Courses Solved Assignment PDFs/ Handwritten Scanned PDFs , Solved PYQs, Guess Papers, Help & Guide Books Available.
WhatsApp: 92882 92884

ignouhub.com

- Total vertices = 4
- Total edges = 6

Each vertex is connected to the other three vertices.
So, degree of each vertex = 3.

Hence, G_1 is a **complete graph** K_4.

Graph G_2:

- Vertices: t, u, v, w
- Edges:
  t connected to u, v, w
  u connected to v and w
  v connected to w

Total vertices = 4
Total edges = 6

Each vertex has degree 3.

Thus, G_2 is also a **complete graph** K_4.

3. Conclusion

Both graphs:

- Have 4 vertices
- Have 6 edges
- Each vertex has degree 3
- Structure matches that of K_4

Therefore, there exists a one-to-one adjacency-preserving mapping between vertices.

$$\boxed{G_1 \cong G_2}$$

Hence, **the graphs G_1 and G_2 are isomorphic.** ✓

IGNOU All Courses Solved Assignment PDFs/ Handwritten Scanned PDFs , Solved PYQs, Guess Papers, Help & Guide Books Available.
WhatsApp: 92882 92884

ignouhub.com

Q6: What is a finite automata ? Why is it needed? How is a finite automata represented?. Also explain the term regular expression with the help of an example.

Solution: 1. Finite Automata (FA)

A **Finite Automata (FA)** is a mathematical model of computation used to recognize patterns and languages.
It consists of a finite number of states and transitions between those states based on input symbols.

It is mainly used to accept or reject strings of a formal language.

2. Need of Finite Automata

Finite Automata is needed:

- To design **lexical analyzers** in compiler design
- To describe and recognize **regular languages**
- In **pattern matching** and text processing
- In designing **digital circuits and control systems**

Thus, FA provides a simple computational model for language recognition.

3. Representation of Finite Automata

A Finite Automaton is represented by a 5-tuple:

$$M = (Q, \Sigma, \delta, q_0, F)$$

Where:

- Q = Finite set of states
- Σ = Input alphabet
- δ = Transition function
- q_0 = Initial state
- F = Set of final (accepting) states

It can also be represented by:

- **State transition diagram**
- **Transition table**

PINAKA PUBLICATION Estd. 2019 92882-92884
IGNOU All Courses Solved Assignment PDFs/ Handwritten Scanned PDFs , Solved PYQs, Guess Papers, Help & Guide Books Available.
WhatsApp: 92882 92884

ignouhub.com

4. Regular Expression

A **Regular Expression (RE)** is an algebraic notation used to represent regular languages.

It uses operators like:

- Union (+ or |)
- Concatenation
- Kleene star (*)

Example:

Regular expression:

$$(0+1)^*$$

This represents all possible binary strings including ε (empty string), such as:

$$\epsilon, 0, 1, 01, 10, 110, 1010 \ldots$$

Conclusion

Finite Automata is a simple computational model used to recognize regular languages, and Regular Expressions provide a compact way to represent those languages.

Q7: Differentiate between

a. Deterministic and Non-deterministic finite automata

Solution:

Basis	DFA	NFA
Transition	For each state and input symbol, exactly one transition	For a state and input symbol, zero, one or multiple transitions possible

IGNOU All Courses Solved Assignment PDFs/ Handwritten Scanned PDFs , Solved PYQs, Guess Papers, Help & Guide Books Available.
WhatsApp: 92882 92884

ignouhub.com

Basis	DFA	NFA
ε-moves	Not allowed	Allowed (in ε-NFA)
Transition function	$\delta: Q \times \Sigma \to Q$	$\delta: Q \times \Sigma \to 2^Q$
Computation	Single computation path	Multiple possible paths
Power	DFA and NFA have equal computational power	Equivalent to DFA

b. Deterministic and Non-deterministic Turing Machine

Solution:

Basis	Deterministic TM (DTM)	Non-Deterministic TM (NTM)
Transition	Exactly one move for each state and tape symbol	Multiple possible moves allowed
Computation	Single computation path	Multiple computation branches
Acceptance	Accepts if single path reaches final state	Accepts if any branch reaches final state
Power	Equivalent in language recognition power	Equivalent to DTM (theoretically)

c. Moore and Mealy Machine

Solution:

Basis	Moore Machine	Mealy Machine
Output depends on	Only current state	Current state and input
Output placement	On states	On transitions

PINAKA PUBLICATION Estd. 2019 92882-92884
IGNOU All Courses Solved Assignment PDFs/ Handwritten Scanned PDFs , Solved PYQs, Guess Papers, Help & Guide Books Available.
WhatsApp: 92882 92884

ignouhub.com

Basis	Moore Machine	Mealy Machine
Response speed	Slower (changes with state change)	Faster (changes immediately with input)
Number of states	Generally more	Generally fewer

Q8: Describe the divide-and-conquer approach to solve recurrences ? Explain how this approach can be used to apply binary search in a sorted list.

Solution: 1. Divide-and-Conquer Approach

Divide-and-Conquer is an algorithm design technique that solves a problem by:

1. **Divide** - Break the problem into smaller sub-problems of the same type.
2. **Conquer** - Solve the sub-problems recursively.
3. **Combine** - Combine the solutions of sub-problems to get the final solution.

The running time of such algorithms is generally expressed using a **recurrence relation** of the form:

$$T(n) = aT\left(\frac{n}{b}\right) + f(n)$$

where:

- a = number of sub-problems
- n/b = size of each sub-problem
- $f(n)$ = time to divide and combine

2. Application to Binary Search

Binary Search works on a **sorted list** using divide-and-conquer.

Steps:

1. Compare the target element with the **middle element**.

IGNOU All Courses Solved Assignment PDFs/ Handwritten Scanned PDFs , Solved PYQs, Guess Papers, Help & Guide Books Available.
WhatsApp: 92882 92884

ignouhub.com

2. If equal → element found.
3. If smaller → search in left half.
4. If larger → search in right half.

At each step, the problem size is reduced to **n/2**.

3. Recurrence for Binary Search

Since only one sub-problem is generated of size $n/2$:

$$T(n) = T(n/2) + O(1)$$

Solving the recurrence:

$$T(n) = O(\log n)$$

Thus, binary search has logarithmic time complexity.

Conclusion

Divide-and-Conquer reduces large problems into smaller sub-problems recursively.
Binary Search is a classic example where the search space is halved at every step, resulting in efficient $O(\log n)$ time complexity.

Q9: What is proposition ? Explain with the help of an example. Explain Disjunction and Conjunction with the help of truth table for each.

Solution:

1. Proposition

A **proposition** is a declarative statement that is either **true (T)** or **false (F)**, but not both.

It must have a definite truth value.

Examples:

- "2 + 3 = 5" → True

PINAKA PUBLICATION Estd. 2019 92882-92884
IGNOU All Courses Solved Assignment PDFs/ Handwritten Scanned PDFs , Solved PYQs, Guess Papers, Help & Guide Books Available.
WhatsApp: 92882 92884

ignouhub.com

- "7 is an even number" → False

Statements like "Close the door" or "How are you?" are **not propositions** because they do not have truth values.

2. Conjunction (AND)

The conjunction of two propositions p and q is written as:

$$p \wedge q$$

It is true only when **both p and q are true**.

Truth Table for Conjunction

p	**q**	$\boldsymbol{p \wedge q}$
T	T	T
T	F	F
F	T	F
F	F	F

Example:
Let
p: "It is raining"
q: "It is cold"

$p \wedge q$ means "It is raining AND it is cold".

3. Disjunction (OR)

The disjunction of two propositions p and q is written as:

$$p \vee q$$

It is true if **at least one** of p or q is true.

IGNOU All Courses Solved Assignment PDFs/ Handwritten Scanned PDFs , Solved PYQs, Guess Papers, Help & Guide Books Available.
WhatsApp: 92882 92884

ignouhub.com

Truth Table for Disjunction

p	q	$p \vee q$
T	T	T
T	F	T
F	T	T
F	F	F

Conclusion

A proposition is a statement with a definite truth value.
Conjunction (AND) is true only when both statements are true, while Disjunction (OR) is true when at least one statement is true.

Q10: Prove the following theorem by direct proof method: "The square of an even integer is an even integer."

Solution:

Proof (Direct Method)

Let n be an even integer.

By definition of even integer:

$$n = 2k$$

for some integer k.

Squaring both sides:

$$n^2 = (2k)^2$$

$$n^2 = 4k^2$$

$$n^2 = 2(2k^2)$$

Let $m = 2k^2$, which is an integer (since integers are closed under multiplication).

PINAKA PUBLICATION Estd. 2019 92882-92884
IGNOU All Courses Solved Assignment PDFs/ Handwritten Scanned PDFs , Solved PYQs, Guess Papers, Help & Guide Books Available.
WhatsApp: 92882 92884

ignouhub.com

So,

$$n^2 = 2m$$

Conclusion

Since n^2 is of the form $2m$ (where m is an integer), by definition, n^2 is even.

$$\boxed{\text{Hence, the square of an even integer is even.}}$$

✔ Proved by direct method.

Q11: Given the Boolean expression (a'v(b∧c))v(bvd'), draw the corresponding circuit, where a, b, c and d are the inputs to the circuitry.

Solution:

1. Step-wise Construction of Circuit

Given expression:

$$(a' \vee (b \wedge c)) \vee (b \vee d')$$

Step 1: NOT Operations

- Generate a' using a **NOT gate**
- Generate d' using a **NOT gate**

Step 2: AND Operation

- $b \wedge c \rightarrow$ Use **AND gate**

Step 3: OR Operations

- OR1: $a' \vee (b \wedge c)$
- OR2: $b \vee d'$
- Final OR: Output of OR1 and OR2

2. Required Gates

- 2 NOT gates (for a' and d')
- 1 AND gate (for $b \wedge c$)
- 3 OR gates

IGNOU All Courses Solved Assignment PDFs/ Handwritten Scanned PDFs , Solved PYQs, Guess Papers, Help & Guide Books Available.
WhatsApp: 92882 92884

ignouhub.com

3. Logic Circuit Diagram

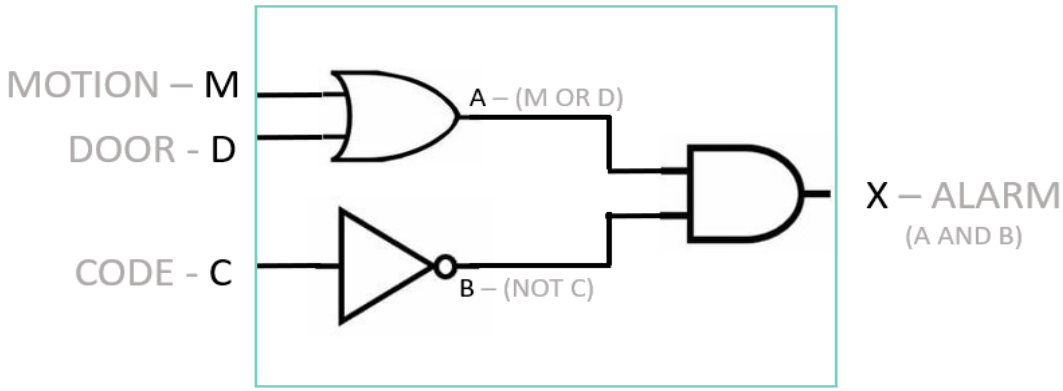

4. Final Output Expression

The final output Y is:

$$Y = (a' \vee (b \wedge c)) \vee (b \vee d')$$

Conclusion

The circuit consists of NOT gates for complements, an AND gate for $b \wedge c$, and OR gates to combine intermediate outputs, producing the required Boolean function.

Q12: Define the terms Domain, Co-domain and Range in the context of a function. Also find the domain, co-domain and range for a function A to B , where A={1,2,3,4} and B={1,4,9,16,25}.

Solution:

1. Definitions

Let $f: A \to B$ be a function.

IGNOU All Courses Solved Assignment PDFs/ Handwritten Scanned PDFs , Solved PYQs, Guess Papers, Help & Guide Books Available.
WhatsApp: 92882 92884

ignouhub.com

- **Domain:**
  The set of all input values of the function.
  It is the set A.

- **Co-domain:**
  The set of possible output values.
  It is the set B.

- **Range:**
  The set of actual output values obtained by applying the function to elements of the domain.
  Range ⊆ Co-domain.

2. Given Sets

$$A = \{1,2,3,4\}$$

$$B = \{1,4,9,16,25\}$$

Assume the function is:

$$f(x) = x^2$$

3. Finding Domain, Co-domain and Range

- **Domain** = $A = \{1,2,3,4\}$
- **Co-domain** = $B = \{1,4,9,16,25\}$

Now compute range:

$$f(1) = 1, \quad f(2) = 4, \quad f(3) = 9, \quad f(4) = 16$$

So,

$$\text{Range} = \{1,4,9,16\}$$

(Note: 25 is in co-domain but not in range.)

IGNOU All Courses Solved Assignment PDFs/ Handwritten Scanned PDFs , Solved PYQs, Guess Papers, Help & Guide Books Available.
WhatsApp: 92882 92884

ignouhub.com

Conclusion

- Domain = {1,2,3,4}
- Co-domain = {1,4,9,16,25}
- Range = {1,4,9,16}

Q13: A committee consisting of 2 male and 2 female workers is to be constituted from 8 male and 9 female workers. In how many distinct ways can this be done?

Solution: Step 1: Selection of Male Workers

Number of ways to select 2 males out of 8:

$$^{8}C_2 = \frac{8!}{2!\,6!} = \frac{8 \times 7}{2} = 28$$

Step 2: Selection of Female Workers

Number of ways to select 2 females out of 9:

$$^{9}C_2 = \frac{9!}{2!\,7!} = \frac{9 \times 8}{2} = 36$$

Step 3: Total Number of Committees

Since selections are independent:

$$\text{Total ways} = {}^{8}C_2 \times {}^{9}C_2$$

$$= 28 \times 36$$

$$= 1008$$

Final Answer:

$$\boxed{1008}$$

IGNOU All Courses Solved Assignment PDFs/ Handwritten Scanned PDFs , Solved PYQs, Guess Papers, Help & Guide Books Available.
WhatsApp: 92882 92884

ignouhub.com

Therefore, the committee can be formed in **1008 distinct ways**.

Q14: In a tennis tournament, each entrant plays a match in the first round. Next, all winners from the first round play a second-round match. Winners continue to move on to the next round, until finally only one player is left as the tournament winner. Assuming that tournaments always involve n = 2^k players, for some k, find the recurrence relation for the number rounds in a tournaments of n players.

Solution: Given:

$$n = 2^k$$

Step 1: Observing the Pattern

- After 1st round → players reduce from n to $n/2$
- After 2nd round → players reduce to $n/4$
- After 3rd round → players reduce to $n/8$

Thus, in each round, the number of players becomes:

$$\frac{n}{2}$$

Step 2: Recurrence Relation

Let $R(n)$ be the number of rounds for n players.

Since after one round, the number of players becomes $n/2$:

$$R(n) = R(n/2) + 1$$

with base condition:

$$R(1) = 0$$

(When only one player remains, no more rounds are needed.)

IGNOU All Courses Solved Assignment PDFs/ Handwritten Scanned PDFs , Solved PYQs, Guess Papers, Help & Guide Books Available.
WhatsApp: 92882 92884

ignouhub.com

Step 3: Solving the Recurrence

Repeated substitution:

$$R(n) = R(n/2) + 1$$
$$= R(n/4) + 2$$
$$= R(n/8) + 3$$

After k steps:

$$R(n) = R(1) + k$$

Since $n = 2^k$,

$$R(n) = k = \log_2 n$$

Final Answer

The recurrence relation is:

$$\boxed{R(n) = R(n/2) + 1, \quad R(1) = 0}$$

and the number of rounds required is:

$$\boxed{R(n) = \log_2 n}$$

Q15: Show, using the pigeonhole principle, that in any group of 30 people, 5 people can always be found who were born on the same day of the week.

Solution: Step 1: Pigeonhole Principle

The **Pigeonhole Principle** states that:

> If N objects are placed into k boxes, then at least one box contains at least
>
> $$\left\lceil \frac{N}{k} \right\rceil$$
>
> objects.

IGNOU All Courses Solved Assignment PDFs/ Handwritten Scanned PDFs , Solved PYQs, Guess Papers, Help & Guide Books Available.
WhatsApp: 92882 92884

ignouhub.com

Step 2: Identify Objects and Boxes

- Objects = 30 people
- Boxes = 7 days of the week
  (Sunday, Monday, Tuesday, Wednesday, Thursday, Friday, Saturday)

Thus,

$$N = 30, \quad k = 7$$

Step 3: Apply the Formula

$$\left\lceil \frac{30}{7} \right\rceil = \lceil 4.2857 \rceil = 5$$

Step 4: Conclusion

This means at least one day of the week must have **at least 5 people** born on that day.

Hence, in any group of 30 people, at least 5 were born on the same day of the week.

✔ Proven using the Pigeonhole Principle.

Q16: Define the following in the context of graph, with the help of an example:

a. Complete graph

Solution: A **complete graph** is a simple graph in which every pair of distinct vertices is connected by an edge.

It is denoted by K_n, where n is the number of vertices.

Example:
In K_4, there are 4 vertices and each vertex is connected to the other three.
Total edges in $K_n = \frac{n(n-1)}{2}$.

IGNOU All Courses Solved Assignment PDFs/ Handwritten Scanned PDFs , Solved PYQs, Guess Papers, Help & Guide Books Available.
WhatsApp: 92882 92884

ignouhub.com

b. Degree of a vertex

Solution: The **degree** of a vertex is the number of edges incident to that vertex.

It is denoted by $deg(v)$.

Example:
If a vertex v is connected to three other vertices, then:

$$deg(v) = 3$$

In a complete graph K_4, each vertex has degree 3.

c. Cycle

Solution: A **cycle** is a closed path in which the first and last vertices are the same, and no other vertices are repeated.

Example:
In a graph with vertices A, B, C:

$$A \to B \to C \to A$$

This forms a cycle of length 3.

d. Path

Solution: A **path** is a sequence of distinct vertices where each consecutive pair is connected by an edge.

Example:

$$A \to B \to C \to D$$

No vertex is repeated.

e. Circuit

Solution: A **circuit** is a closed path where the starting and ending vertices are the same.
Vertices may repeat, but edges are not repeated.

Example:

PINAKA PUBLICATION Estd. 2019 92882-92884
IGNOU All Courses Solved Assignment PDFs/ Handwritten Scanned PDFs , Solved PYQs, Guess Papers, Help & Guide Books Available.
WhatsApp: 92882 92884

ignouhub.com

$$A \to B \to C \to A$$

Q17: What is a bipartite graph ? Explain with the help of an example. Give one or two applications of bipartite graphs.

Solution: 1. Definition

A **bipartite graph** is a graph whose vertex set can be divided into two disjoint sets V_1 and V_2 such that:

- Every edge connects a vertex from V_1 to a vertex in V_2.
- No edge exists between vertices of the same set.

If every vertex of V_1 is connected to every vertex of V_2, it is called a **complete bipartite graph**, denoted by $K_{m,n}$.

2. Example

Let:

$$V_1 = \{u_1, u_2\}, \quad V_2 = \{v_1, v_2, v_3\}$$

Edges:

$$u_1 \text{ connected to } v_1, v_2$$

$$u_2 \text{ connected to } v_2, v_3$$

There are no edges within V_1 or within V_2.
Hence, the graph is bipartite.

A simple real-life example is:

- Set V_1: Students
- Set V_2: Projects
- Edge: A student assigned to a project

3. Applications of Bipartite Graphs

5. **Matching Problems** - Used in job assignment, student-project allocation, marriage matching problems.

IGNOU All Courses Solved Assignment PDFs/ Handwritten Scanned PDFs , Solved PYQs, Guess Papers, Help & Guide Books Available.
WhatsApp: 92882 92884

ignouhub.com

6. **Network Flow Problems** - Used in maximum matching and scheduling problems.

Conclusion

A bipartite graph divides vertices into two disjoint sets with edges only between the sets. It is widely used in matching and assignment problems.

Q18: How Hamiltonian graphs differ from the Eulerian graphs? Give Dirac's and Ore's criterion for the Hamiltonian graphs.

Solution:

1. Difference between Hamiltonian and Eulerian Graphs

Basis	Hamiltonian Graph	Eulerian Graph
Definition	Contains a **Hamiltonian cycle** (visits every vertex exactly once)	Contains an **Eulerian circuit** (traverses every edge exactly once)
Concerned with	Vertices	Edges
Repetition	Vertices not repeated (except start/end)	Edges not repeated
Condition	No simple necessary and sufficient condition	All vertices have even degree

Thus, Hamiltonian graphs deal with visiting **all vertices**, while Eulerian graphs deal with traversing **all edges**.

2. Dirac's Criterion (1952)

Let G be a simple graph with $n \geq 3$ vertices.

If every vertex has degree:

$$deg(v) \geq \frac{n}{2}$$

IGNOU All Courses Solved Assignment PDFs/ Handwritten Scanned PDFs , Solved PYQs, Guess Papers, Help & Guide Books Available.
WhatsApp: 92882 92884

ignouhub.com

then G is Hamiltonian.

3. Ore's Criterion (1960)

Let G be a simple graph with $n \geq 3$ vertices.

If for every pair of non-adjacent vertices u and v:

$$deg(u) + deg(v) \geq n$$

then G is Hamiltonian.

Conclusion

Hamiltonian graphs focus on vertex traversal, while Eulerian graphs focus on edge traversal. Dirac's and Ore's theorems provide sufficient conditions for a graph to be Hamiltonian.

Q19: Differentiate between Eulerian graph and Eulerian circuit. Find the Eulerian circuit in the graph given below (if it exists).

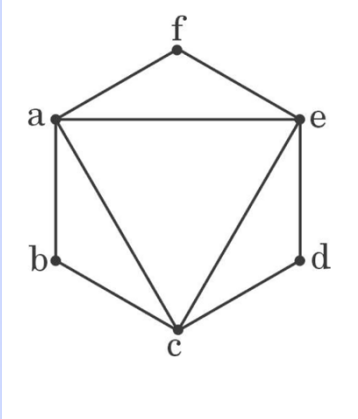

Solution:

1. Difference between Eulerian Graph and Eulerian Circuit

IGNOU All Courses Solved Assignment PDFs/ Handwritten Scanned PDFs , Solved PYQs, Guess Papers, Help & Guide Books Available.
WhatsApp: 92882 92884

ignouhub.com

Basis	Eulerian Graph	Eulerian Circuit
Meaning	A graph that contains an Eulerian circuit	A closed trail that uses every edge exactly once
Condition	All vertices have even degree	Must start and end at same vertex
Focus	Property of graph	Actual traversal/path

2. Check Whether Eulerian Circuit Exists

From the given graph, vertices are:

$$a, b, c, d, e, f$$

Edges observed:

- Outer edges: $a - b, b - c, c - d, d - e, e - f, f - a$
- Inner edges: $a - e, a - c, e - c$

Degrees of vertices:

- $deg(a) = 4$
- $deg(b) = 2$
- $deg(c) = 4$
- $deg(d) = 2$
- $deg(e) = 4$
- $deg(f) = 2$

All vertices have **even degree**.

Since the graph is connected and all vertices have even degree, the graph is **Eulerian**.

3. Eulerian Circuit

One possible Eulerian circuit is:

$$a \to b \to c \to d \to e \to f \to a \to e \to c \to a$$

This:

IGNOU All Courses Solved Assignment PDFs/ Handwritten Scanned PDFs , Solved PYQs, Guess Papers, Help & Guide Books Available.
WhatsApp: 92882 92884

ignouhub.com

- Uses every edge exactly once
- Starts and ends at vertex a

Q20: Write Short notes on following.

a. Travelling Salesman Problem

Solution: The **Travelling Salesman Problem (TSP)** is an optimization problem in which a salesman must visit each city exactly once and return to the starting city with minimum total travel cost.

- It is a **Hamiltonian cycle problem** with minimum weight.
- It belongs to the class of **NP-Hard problems**.
- Applications: route planning, logistics, circuit board design.

b. Vertex Coloring

Solution: **Vertex coloring** is the assignment of colors to vertices of a graph such that no two adjacent vertices have the same color.

- The minimum number of colors required is called the **chromatic number** $\chi(G)$.
- Applications: timetable scheduling, map coloring, register allocation.

c. Edge Coloring

Solution: **Edge coloring** is the assignment of colors to edges of a graph such that no two adjacent edges share the same color.

- The minimum number of colors required is called the **chromatic index**.
- Applications: scheduling problems, frequency assignment.

d. Planar graphs

Solution: A **planar graph** is a graph that can be drawn on a plane without any edges crossing each other.

For a connected planar graph:

$$V - E + F = 2$$

(Euler's Formula)

PINAKA PUBLICATION Estd. 2019 92882-92884
IGNOU All Courses Solved Assignment PDFs/ Handwritten Scanned PDFs , Solved PYQs, Guess Papers, Help & Guide Books Available.
WhatsApp: 92882 92884

ignouhub.com

where
V = vertices,
E = edges,
F = faces.

Example: K_4 is planar, but K_5 is non-planar.

e. Pascal's Formula

Solution: Pascal's Formula gives a recursive relation for binomial coefficients:

$$\binom{n}{r} = \binom{n-1}{r-1} + \binom{n-1}{r}$$

It is used in:

- Construction of Pascal's Triangle
- Combinatorics and binomial expansion

IGNOU All Courses Solved Assignment PDFs/ Handwritten Scanned PDFs , Solved PYQs, Guess Papers, Help & Guide Books Available.
WhatsApp: 92882 92884