Temperature-Controlled LED with Op-Amp

	Authors
1.	Himanshi Srivastava (24JE0799)
2.	Hima Sai Sankar Vidya Sagar (24JE0798)

Introduction

The "**Temperature-Controlled LED with Op-Amp**" project is an automated sensing system designed to monitor thermal changes in the environment and provide a real-time visual indicator. By integrating an NTC thermistor with an operational amplifier, the circuit can detect when a specific temperature threshold is reached and trigger an LED to signal the change.

Precision Sensing: It utilizes a Negative Temperature Coefficient (NTC) thermistor, where resistance decreases as temperature increases, allowing for sensitive thermal detection.

Threshold Customization: The inclusion of a 10kΩ potentiometer enables you to manually set the exact temperature at which the LED turns on, making the system adaptable to different environments.

Problem Statement

The problem statement for this project centers on the critical need for cost-effective and autonomous thermal monitoring to prevent equipment damage in sensitive environments. Manual temperature tracking is often inefficient and prone to human oversight, leading to potential risks where electronic components or laboratory samples could exceed safe thermal limits without warning. While digital solutions using microcontrollers exist, they can be unnecessarily complex and expensive for simple monitoring tasks. This project addresses these issues by utilizing an LM358 op-amp as a comparator to detect resistance changes in an NTC thermistor, providing a real-time visual alert via an LED as soon as a user-defined temperature threshold is breached.

Components Required

Component	Quantity
IC LM358	1
10kΩ NTC	1
4.7kohm Resistor	1
LED (Green)	1
10k Potentiometer	1
1 kΩ Resistor	1
Power Supply (5V)	1
PCB Board / Breadboard	1
Miscellaneous (wires, base)	As required

Circuit Diagram

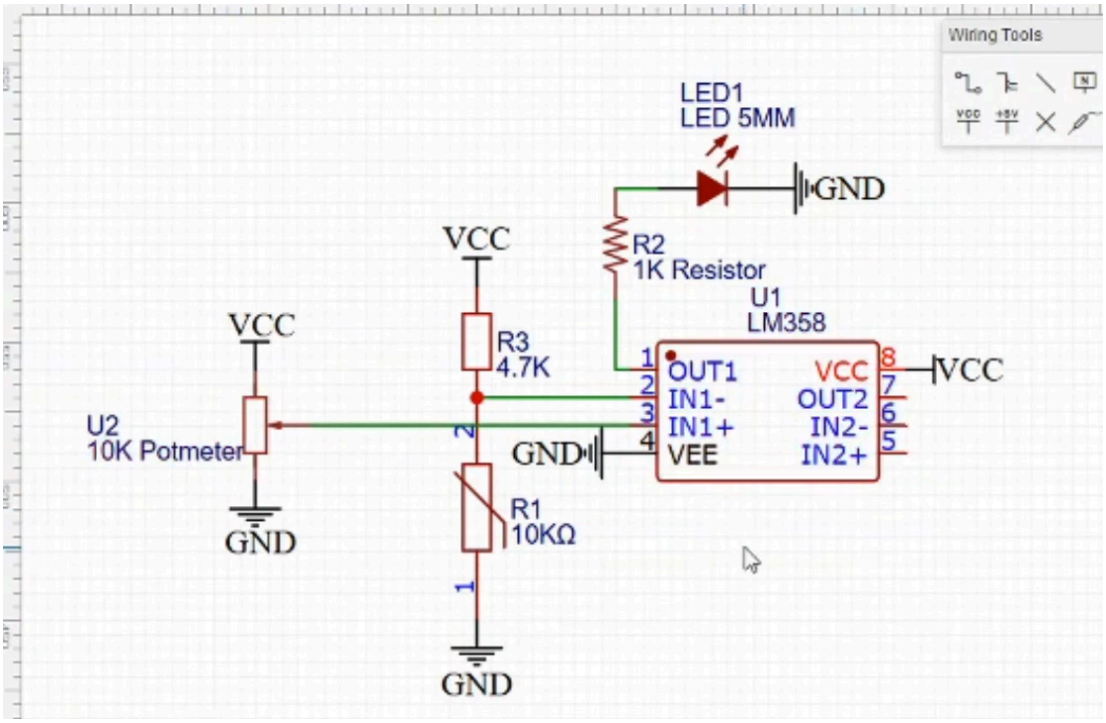

Working Principle

This system uses an LM358 Op-Amp as a voltage comparator.

The NTC thermistor changes its resistance based on the ambient temperature. When the temperature rises, the resistance of the NTC decreases, altering the voltage at the Op-Amp's inverting input.

Once this voltage crosses the threshold set by the potentiometer, the Op-Amp switches its output state, turning the LED **ON**. The potentiometer allows the user to calibrate the specific temperature "trip point."

Applications

This circuit serves as a fundamental building block for various automated systems, including:

- **Overheat Alarms:** Providing a visual warning when industrial machinery or computer components exceed safe temperatures.
- **Automatic Cooling Systems:** Can be modified to trigger a DC fan instead of an LED to cool down equipment.
- **Climate Control:** Used in smart greenhouses or terrariums to monitor environment stability.
- **Fire Detection:** A simplified version can act as a rudimentary heat-based fire indicator.

Conclusion

The **Temperature-Controlled LED system** demonstrates an efficient and low-cost approach to environmental monitoring using analog electronics. By leveraging the **LM358 Op-Amp** as a comparator and a **10kΩ NTC thermistor** as the primary sensing element, the project successfully automates the detection of thermal changes.