QUICK START GUIDE

Product: MASC Multi Axis Stepper Controller

Product Description

Stepper Motor Controller

TABLE OF CONTENTS

Table of Contents

1 IMPORTANT SAFETY INFORMATION! 4

POSITION CONTROL SYSTEMS ARE INHERENTLY HAZARDOUS. EVEN A SMALL MOTOR, IF COUPLED TO A LEADSCREW, GEARBOX, OR ANY OTHER FORM OF MECHANISM THAT PROVIDES A MECHANICAL ADVANTAGE, CAN GENERATE CONSIDERABLE FORCE AND COULD CAUSE SERIOUS INJURY. INCORRECT OPERATION CAN ALSO LEAD TO DAMAGE TO THE MOTOR OR ASSOCIATED MACHINERY. IT IS ESSENTIAL THAT THE PURPOSE OF THE VARIOUS FAULT DETECTION FEATURES BUILT INTO THE MASC'S ST5-Q CONTROLLER BE FULLY UNDERSTOOD AND USED CORRECTLY. 4

AS SUCH, INSTALLATION MUST BE CARRIED OUT ONLY BY COMPETENT PERSONS WHO ARE FAMILIAR WITH ELECTRONIC CONTROL SYSTEMS 4

2 OVERVIEW 4

2.1 LAYOUT - FRONT 4

2.2 LAYOUT – REAR 5

3 GETTING STARTED 5

3.1 UNPACKING 5

3.2 CONNECTIONS TO MASC 6
3.2.1 Power Connection 7
3.2.2 D Type Connectors 7
3.2.3 M12 Connectors 8
3.2.4 Single Axis Systems 8
3.2.5 Multi Axis Systems 9

3.3 CONNECTIONS TO DEVICES 9
3.3.1 M12 Connectors 9
3.3.2 UTO Connectors 10
3.3.3 LEMO Connectors 11
3.3.4 Encoder Connections 11

3.4 CONNECTION TO PC 12

3.5 CONNECTION TO JOG BOX 13

3.6 CHECKS 13

4 OPERATION 14

4.1 JOG BOX 14
4.1.1 Jog Mode 15
4.1.2 SEQUENCE MODE 16
4.1.3 Limits and Datum Mode 18
4.1.4 Status Mode 19

4.2 JOG EMULATOR 19

4.3 Q PROGRAMMER 19

1 IMPORTANT SAFETY INFORMATION!

This document is intended as a user guide to operation as determined by the design.

Position control systems are inherently hazardous. Even a small motor, if coupled to a leadscrew, gearbox, or any other form of mechanism that provides a mechanical advantage, can generate considerable force and could cause serious injury. Incorrect operation can also lead to damage to the motor or associated machinery. It is essential that the purpose of the various fault detection features built into the MASC's ST5-Q controller be fully understood and used correctly.

As such, Installation must be carried out only by competent persons who are familiar with electronic control systems

2 OVERVIEW

The MASC is a single axis stepper motor controller in a compact rack mountable enclosure. It is a versatile, high-performance microstepping packaged unit suitable for light industrial and scientific uses where precision and system-level integration are required. Monitoring and control can be achieved over a RS-485 serial connection that can be easily configured in multi-drop for the coordinated use of several drivers over the same connection. RS232 is also an option for single axis applications.

The MASC controller consists of a ST5-Q programmable microstepping drive and an integrated 24V DC universal input power supply built into a 21HP 3U subrack unit for mounting into industry standard 19" racks. This allows for up to four MASC units to be fitted in one standard 84HP wide rack.The MASC is supplied for plug and play operation with UHV Design stepper motorised products. The MASC will be factory preset when purchased with a stepper motorised device.

2.1 LAYOUT - FRONT

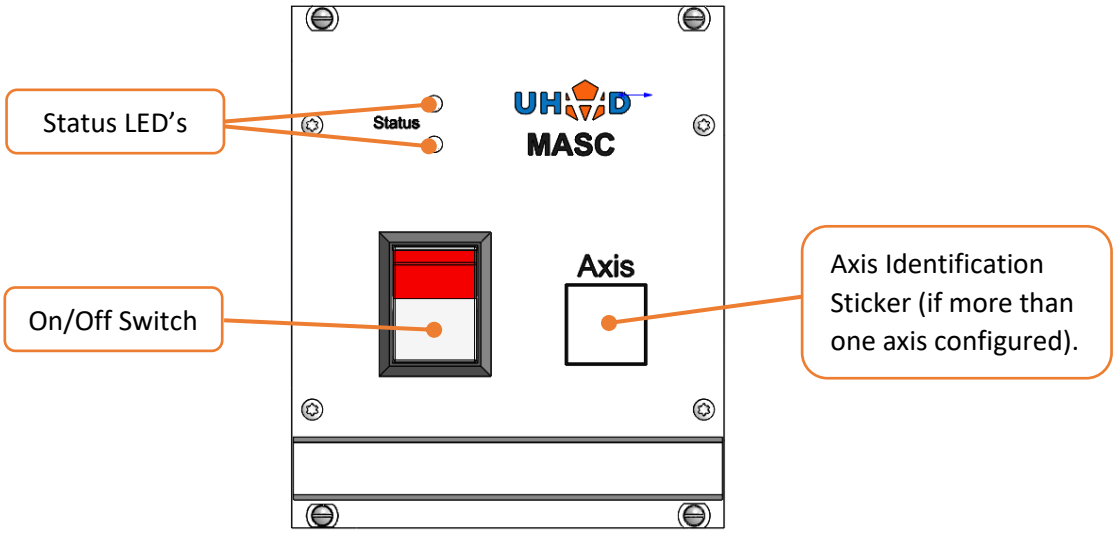

2.2 LAYOUT – REAR

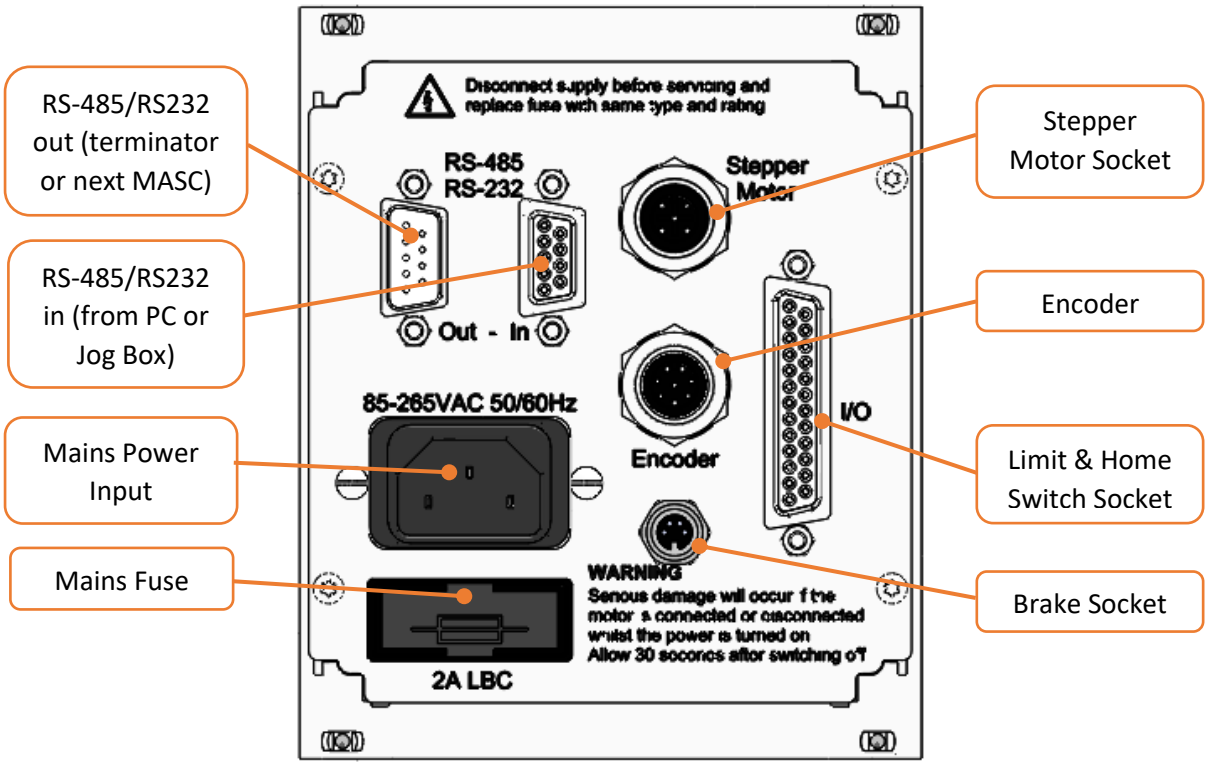

3 GETTING STARTED

3.1 UNPACKING

Included in each package:

MASC (stepper motor controller) x 1

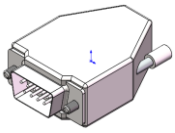

MASC-TP (RS485/232 terminator plug) x 1

MASC-JC-03 (PC/Jog Box connection lean) x 1

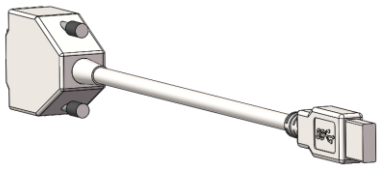

MASC-USB (USB to serial RS-485 converter) x 1

UK Mains power Lead x 1

US Mains power lead x 1

EU Mains power lead x 1

Additional cables and jog box for connection to UHV Design stepper motorised products are provided with the control packages and should be configured when purchasing the device. Cables may be packaged within the MASC packaging.

3.2 CONNECTIONS TO MASC

A dedicated series of cables that allow connection between the MASC and any UHV Design stepper motorised devices are available and should be configured when purchaing the MASC and device together.

Note: It is important not to switch on the MASC until all connections are securely made. Unplugging cables, in particular the motor cables, whilst the MASC is switched on can cause damage to the MASC or motor.

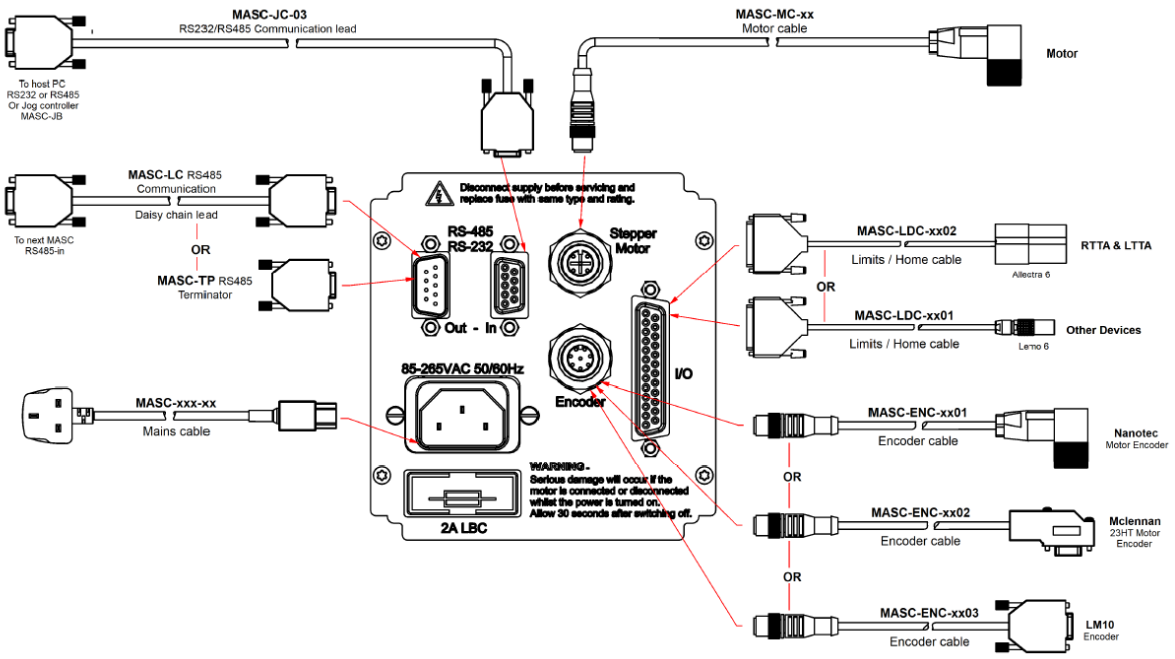

Note: all connectors going into the back of the MASC are straight. Connectors going to motors and switches are generally right angled.

3.2.1 Power Connection

1. Choose appropriate power lead for region e.g. UK, US
2. Push plug into IEC socket on rear of MASC.

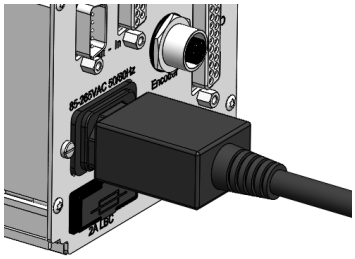

3.2.2 D Type Connectors

1. Push connector into socket
2. Rotate locking screws clockwise until finger tight

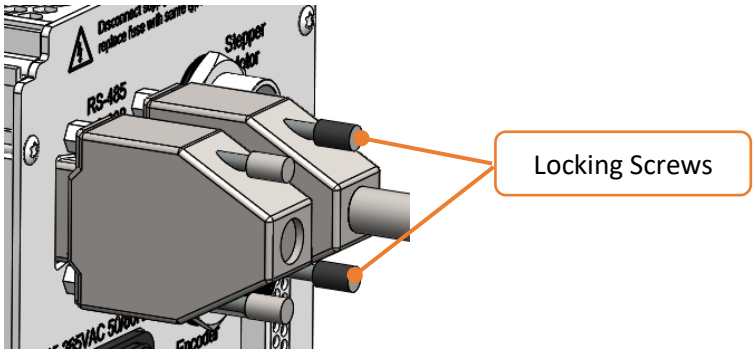

Note: it is easier to plug in the 25 way D connector for switches (if used) <u>after</u> plugging in the motor and encoder connectors.

3.2.3 M12 Connectors

1. Push connector into socket. Note: socket will not engage unless key features are aligned correctly.

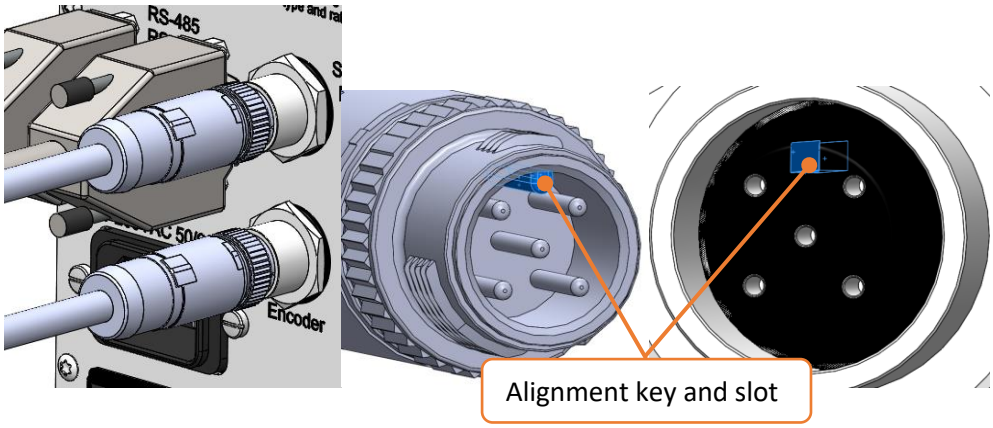

2. Turn knurled nut clockwise until finger tight to fully engage connector pins.

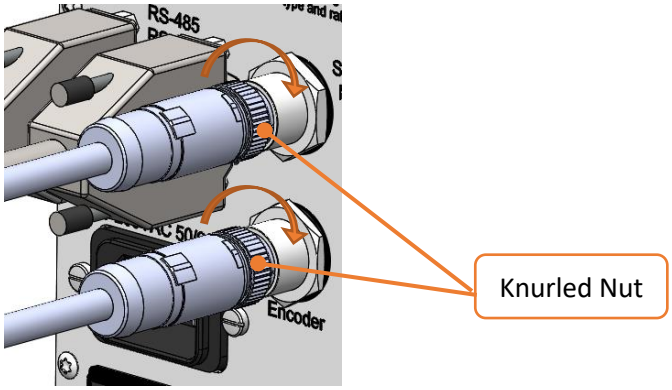

3.2.4 Single Axis Systems

When only one MASC is used:

1. Connect to a PC/laptop using MASC-JC-03 into the RS-485 In port
2. Plug the RS-485 termination plug, MASC-TP, into the RS-485 out port. ***Failure to use the MASC-TP can cause communication error.***

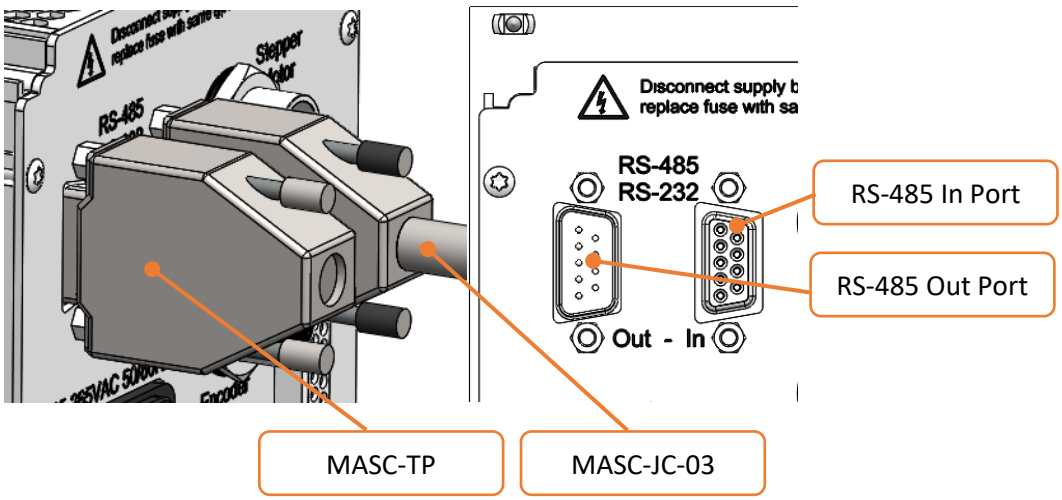

3.2.5 Multi Axis Systems

When more than one MASC is configured to work as a multi axis system (all controlled by one PC or MASC-JB) then the MASC's are daisy chained together. Use the MASC-LC to link MASC's together.

1. Plug First MASC (Axis 1) into PC/laptop as described in section 3.4
2. Plug the MASC-LC into the out port of the first axis MASC's RS-485 out port and into the next MASC's RS-485 In port.

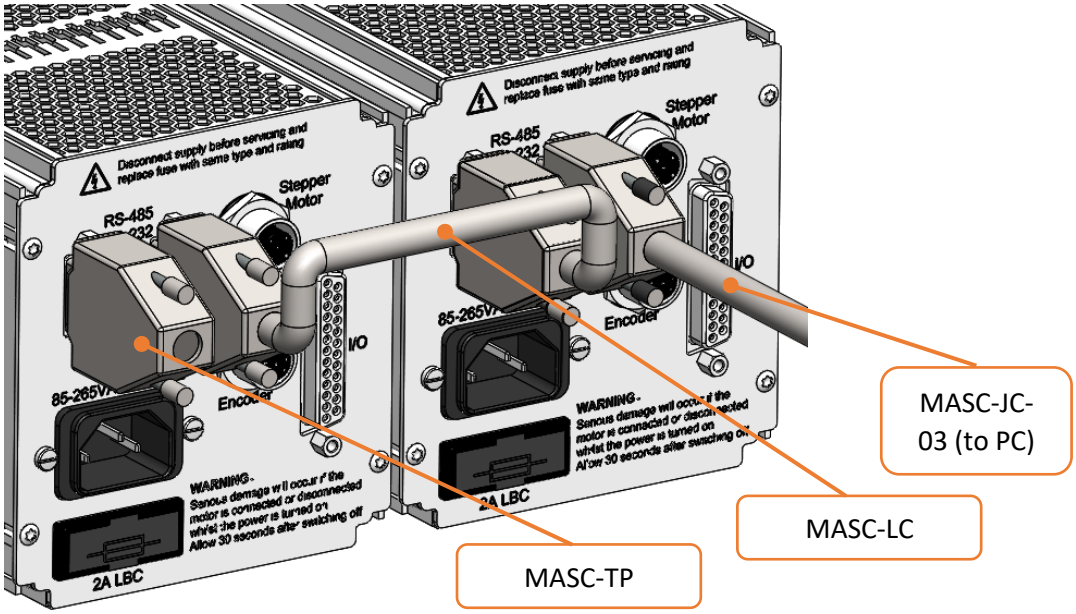

3. Repeat step 2 for as many MASC's that have been configured
4. Plug the MASC-TP. Into the last MASC's RS-485 out port. ***Failure to use the MASC-TP can cause communication error.***

3.3 CONNECTIONS TO DEVICES

3.3.1 M12 Connectors

Connecting stepper motors and encoders with M12 motor connections. The procedure is the same for male and female connectors.

1. Push connector into socket. Note: socket will not engage unless key features are aligned correctly.

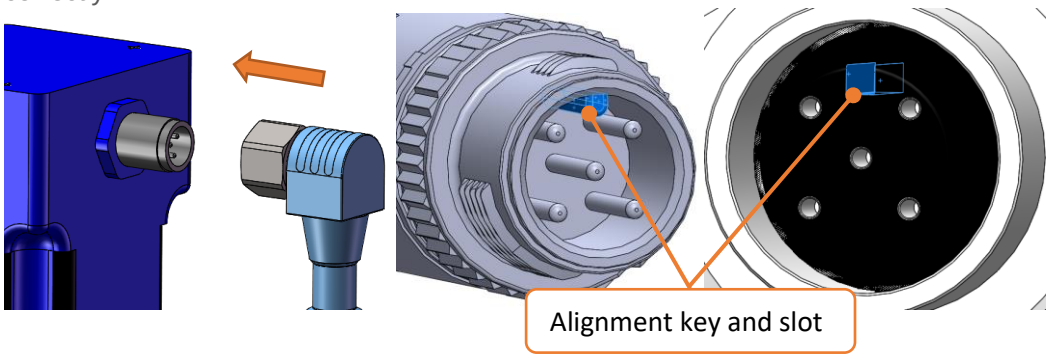

2. Turn knurled nut clockwise until finger tight to fully engage connector pins.

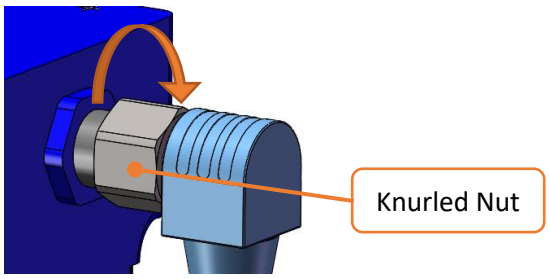

3.3.2 UTO Connectors

Older stepper motorised products use UTO style connectors on the motors. There is an adaptor cable supplied with every motor cable to convert from the standard M12 connector to a UTO (part number WD-C-006). To attach M12 cables together, see section 3.2.3

1. Push connector into socket. Note: socket will not engage unless key features are aligned correctly on both the plug and locking ring

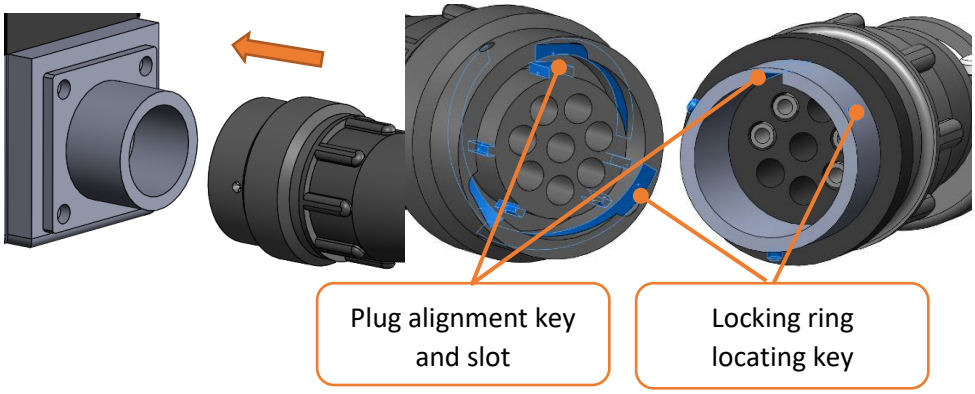

2. Twist the knurled locking ring clockwise until it clicks. (approximately 30°)

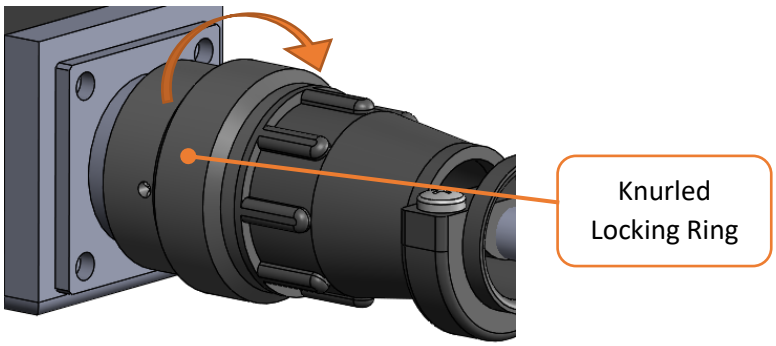

3.3.3 LEMO Connectors

All limit switch connectors are made with a 6 pin right angled LEMO connector.

1. Push the connector into the socket until it clicks into place. Ensure the alignment key is aligned with the alignment slots

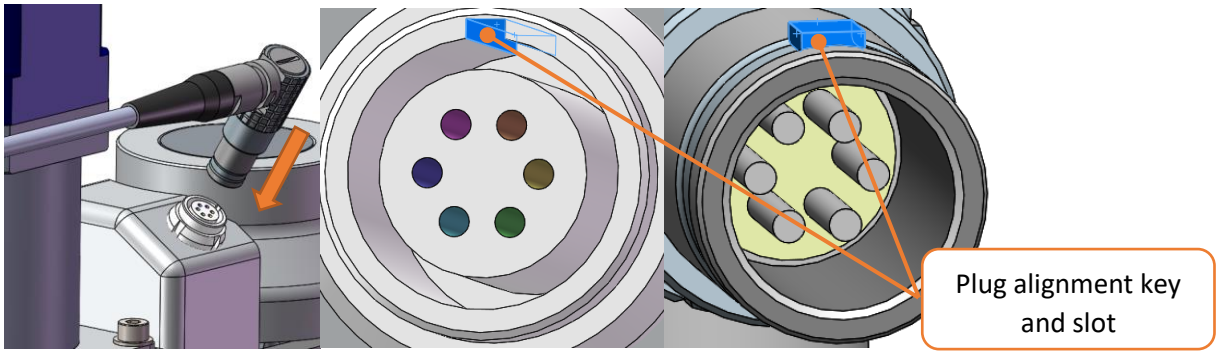

3.3.4 Encoder Connections

Motors with M12 connectors and integral encoder (specified with order) have a built in 500 line incremental rotary encoder. The connector is sited next to the motor connector. To connect the cable, see section 3.3.1. Encoders have 8 pin connectors.

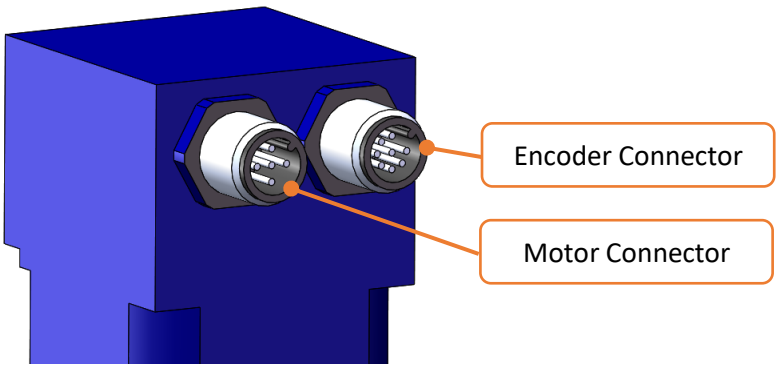

Motors with UTO connectors and integral encoder (specified with order) have a built in 500 line incremental rotary encoder wired to a 9 way D socket.

1. Push the plug into the connector socket
2. Screw in the locking screws using a suitable, flat bladed screwdriver. Turn screws clockwise until finger tight

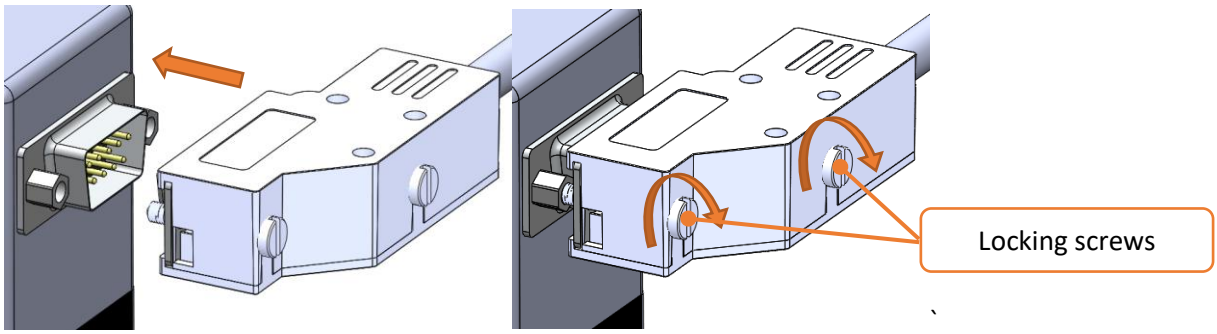

Devices with LM10 Incremental linear encoders including; LSM's, Y-shifts, XY stages and TTX stages have a 9 pin D connector on a flying lead.

1. Using coupling nuts provided with cable, screw nut onto locking screw until finger tight

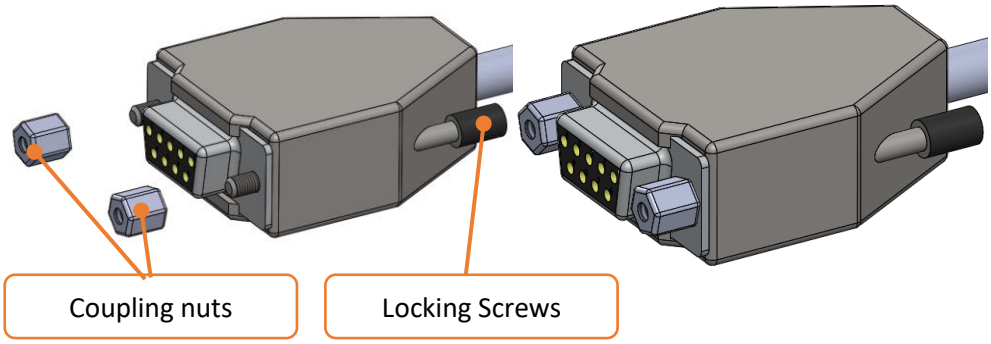

2. Push connectors together.
3. Screw in the locking screws from the encoder cable connector until finger tight.

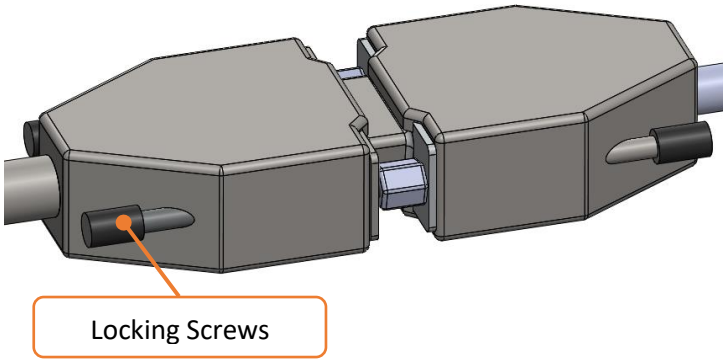

3.4 CONNECTION TO PC

If no remote jog box has been purchased, then the device will need to be connected to a PC or laptop in order to perform basic functions.

1. Plug all cables into the MASC and device as described above.
2. If the PC/laptop has a dedicated serial port that supports RS-485 or RS-232, then the MASC-JC-03 can be plugged directly into the port. 9 way connectors are connected as described in section 3.2.2
3. If no serial port is available then an RS-485 to USB cable is supplied with each system (MASC-USB). Connect the 9 way D connectors of the MASC-JC-03 and MASC-USB together as described in section 3.3.4
4. Plug USB connector into appropriate port.

3.5 CONNECTION TO JOG BOX

If the remote jog has been purchased, then it will need to be plugged into the MASC, using the MASC-JC-03 cable.

1. Ensure the MASC-JB is turned off.
2. Plug the MASC-JC-03 into the MASC-JB
3. Screw in the locking screws until finger tight

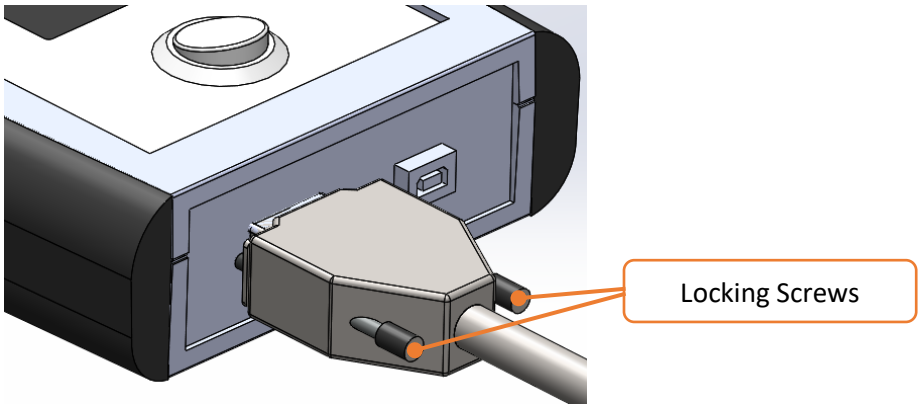

3.6 CHECKS

1. Check that all connections have their relevant locking mechanisms in place to prevent cables from accidentally coming loose.

Note: Unplugging cables, in particular the motor cables, whislt the MASC is switched on can cause damage to the MASC or device.

4 OPERATION

Once all connections and checks have been made, the unit can be switched on using the on/off switch on the front of the MASC. The built in red light of the switch should illuminate and the upper status LED should be either solid green or flashing green. If not, then a fault may be present. Please refer to the troubleshooting section of this guide or contact your supplier.

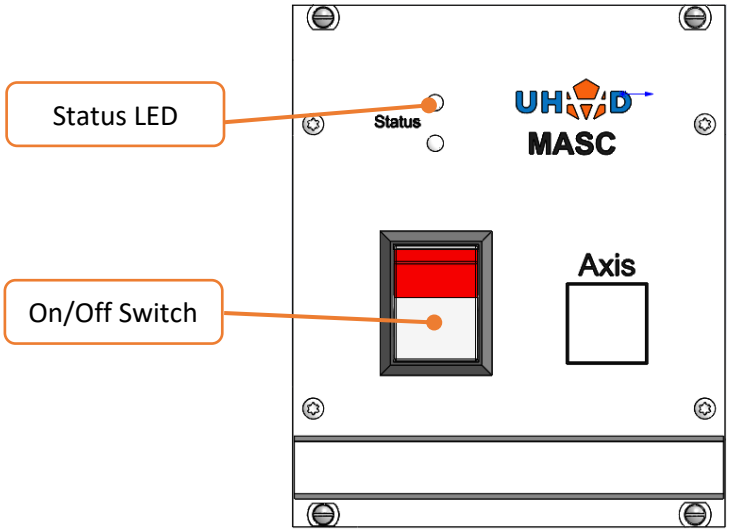

The MASC should now be ready for use.

4.1 JOG BOX

Switch on the MASC-JB. Using the on/off switch. The touchscreen display will illuminate

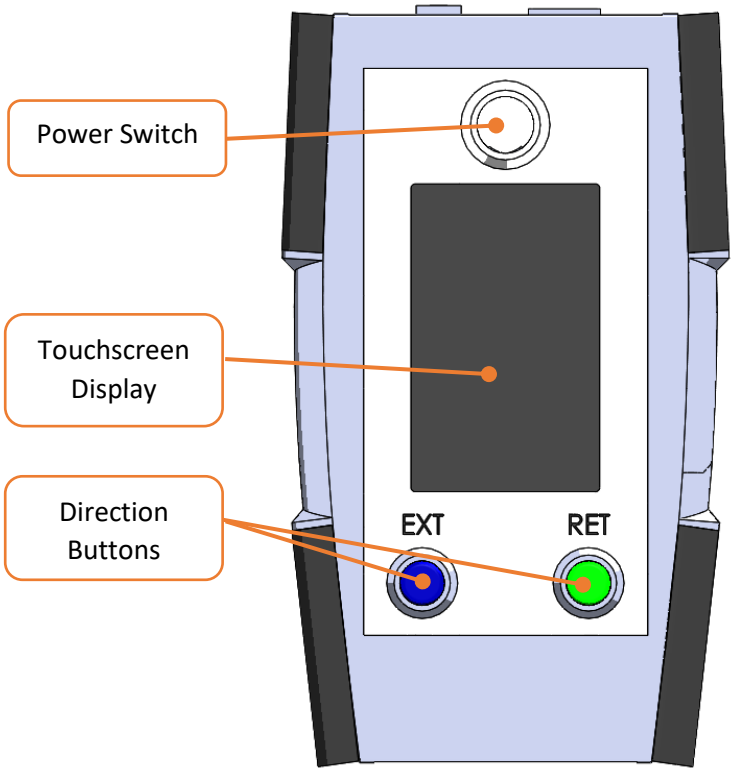

The following should be displayed on the touchscreen display. The MASC-JB has been factory pre-set to operate each MASC and therefore its relevant device. No setup should be required. If in doubt, contact UHV Design or refer to the MASC-JB specific manual.

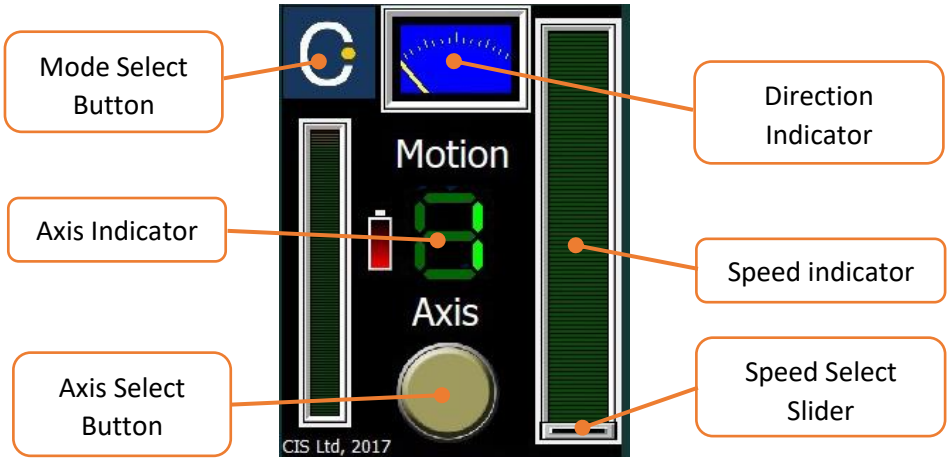

From this screen, the current axis number is displayed on the axis indicator.

4.1.1 Jog Mode

1. To move the device, press either the green or blue direction buttons. The device should then move in either direction until it hits an end of travel limit switch The direction indicator needle will move depending on which direction button is pressed. ***Note: rotary drives that have no limit switches will continuously rotate until the button is released.***
2. To alter the speed, slide the speed select slider up or down until the desired speed is achieved. The MASC-JB has factory pre-set maximum and minimum values, specific to the device being used. If these need to be altered, please refer to the MASC-JB manual or contact UHV Design. ***Note: the speed change will not take effect whilst the direction buttons are being held down. The direction button must be released and then pressed to confirm the speed change.***
3. To select a different axis (if more than one axis is connected) press the axis select button until the relevant number is displayed.

4.1.2 SEQUENCE MODE

The jog box can save up to four positions, on four of the configured axes. These positions can be saved from the position mode screen and then returned to when needed.

Note: these positions are absolute from the set zero position, if you change the zero position, or switch off the controller then the saved positions will change accordingly. It is strongly recommended to zero each axis first and then save the positions. See section *Error! Reference s ource not found.* ***for details.***

4.1.2.1 Saving a Position

1. Using the jog mode, move the device to the desired position. **Note: the speed on the slider will be saved as the speed at which the device moves when saving the position**
2. Press the Select Axis button to navigate to the Position Mode Screen
3. Press and hold the desired axis button until the screen changes.

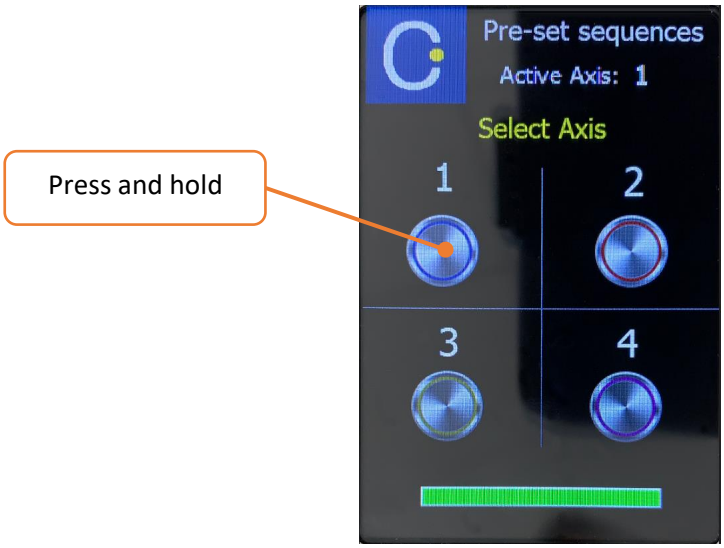

4. Select the sequence number that you wish to save using the select button. The press the set button to save that position.

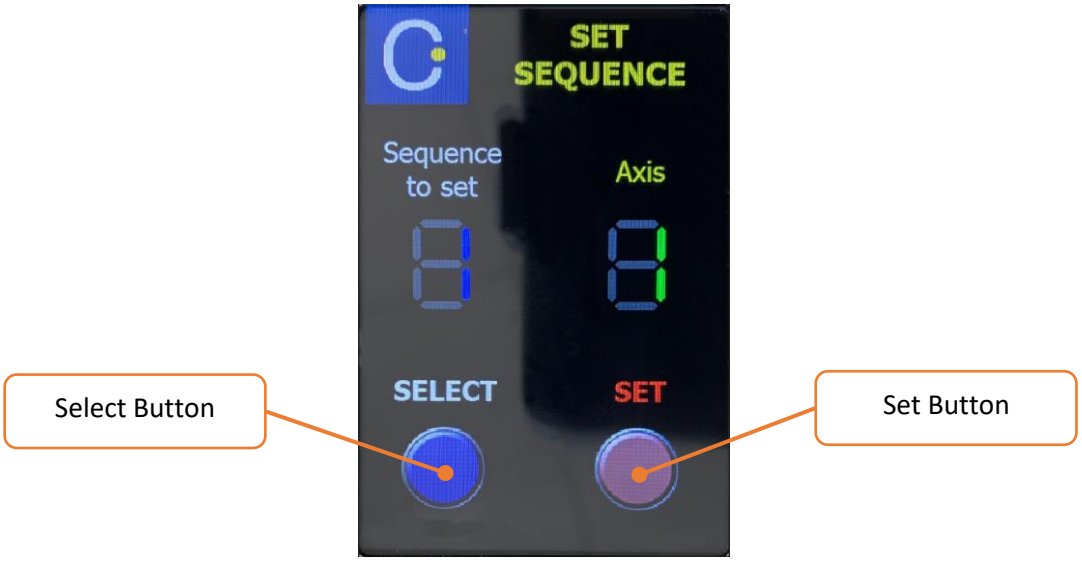

5. Repeat as required.

4.1.2.2 Activating a Saved Position

1. Navigate to the position mode screen.
2. Press the desired Select Axis button once.

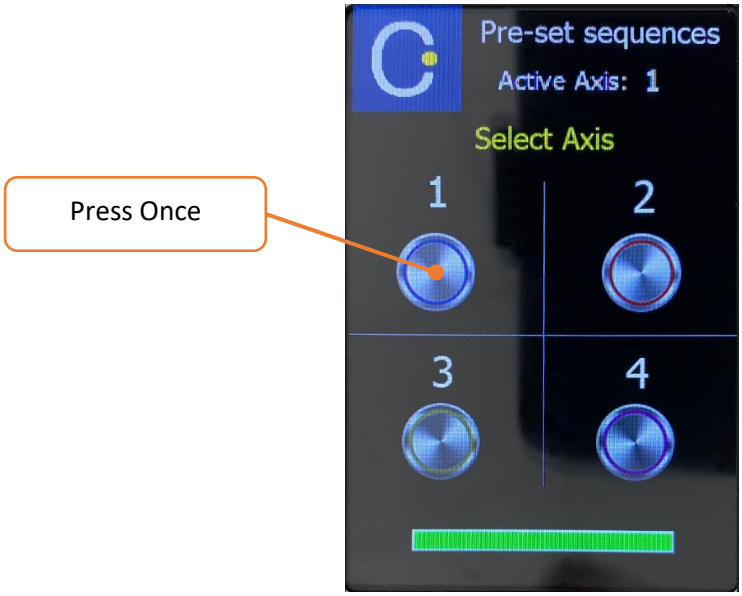

3. Select the sequence number that you wish to activate by pressing the Select button until the desired sequence is shown.
4. Press the Activate Button

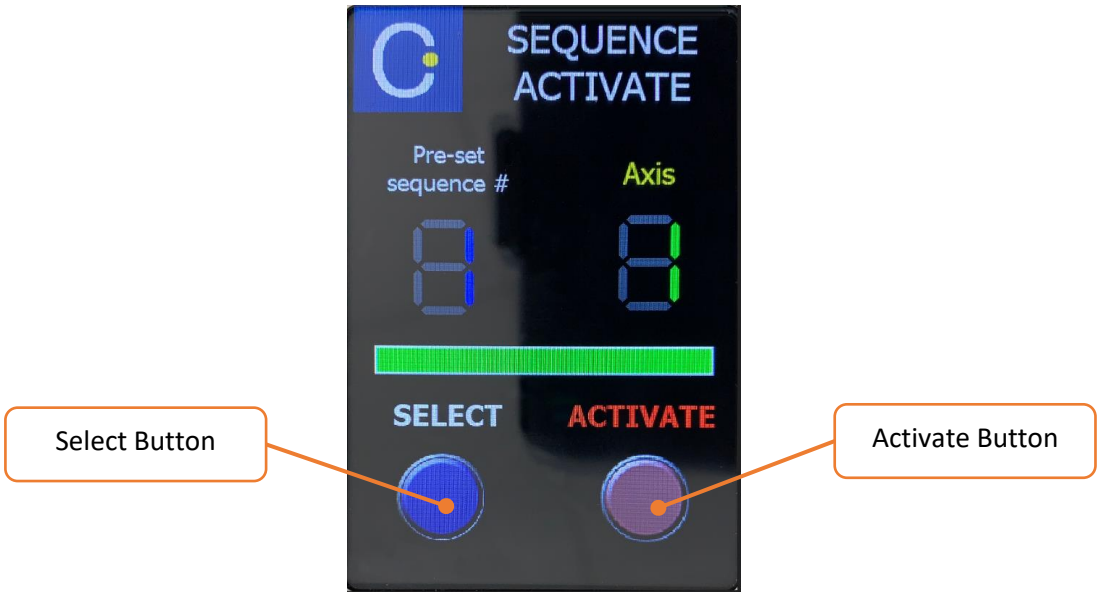

4.1.3 Limits and Datum Mode

1. The MASC-JB has built in home and limit seek functions pre-programmed into it. To access these functions, press the mode select button once.

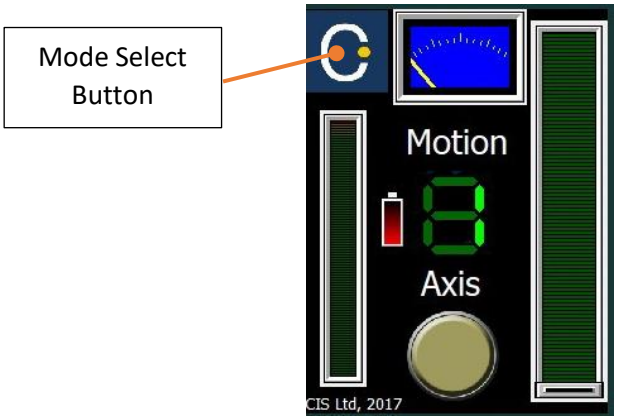

2. The following screen will appear. Press the function you wish to perform by pressing on the desired label. ***Note: the red dot indicates which function is selected.***

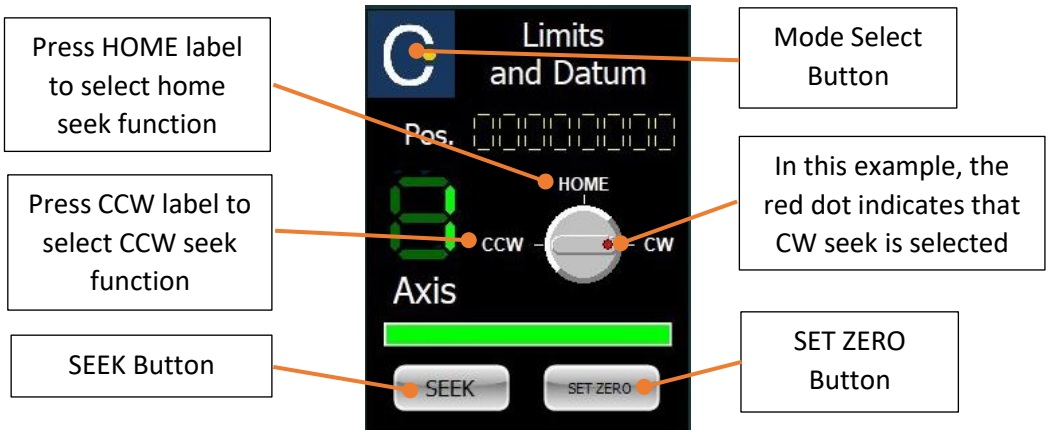

3. Press the SEEK button to perform the operation. The speed at which these functions is performed is defined by the speed selection slider in the jog mode screen. If you wish to stop the move before it is complete, press the mode select button.
4. If desired, once the move is complete, the position can be set to 0 by pressing the SET ZERO button. Alternatively the Pos. display shows the current position and updates every few seconds. These numbers may be written down for later use in automated programs.

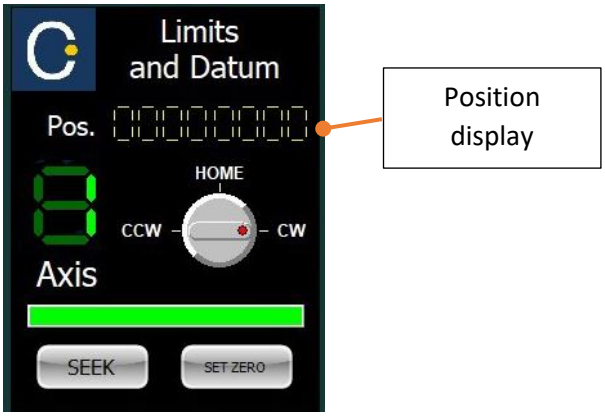

4.1.4 Status Mode

Occasionally there may be error which men that the direction buttons or SEEK functions do not work. Pressing the Mode Select Button will display the status screen where a range of values are displayed. If the alarm status is red, a fault may have been detected. Pressing the mode select button will clear the error and display the jog mode screen unless there is an external fault with the MASC itself. In this case refer to the MASC specific manual or contact UHV Design.

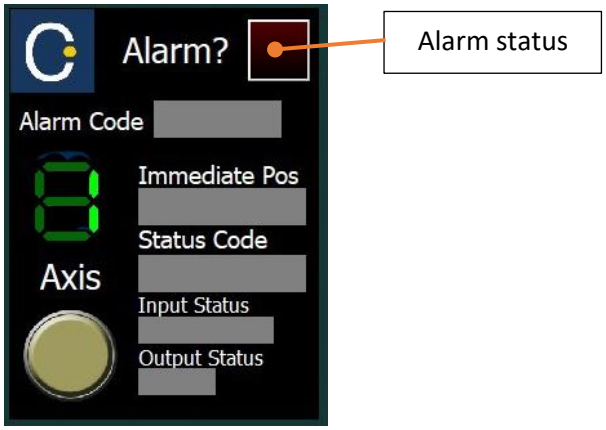

4.2 JOG EMULATOR

If the MASC is being run from a PC/laptop then the Jog Emulator Application can be used to perform all functions as described in section, with the exception of saving positions. 4.1

The Jog Emulator software can be downloaded from the UHV Design website: https://uhvdesign.com/product-help/motion-controllers

4.3 Q PROGRAMMER

If more advanced functionality is required, writing automated programs for example, then a PC or laptop will be required to communicate with the MASC. Plug the MASC into a PC as described in section 3.4. ***Note: The MASC-JB cannot be used at the same time as connection to a PC.***

The software is free to download from www.applied-motion.com/products/software

The Applied Motion Products Q Programmer software gives the ability to write complex sequences and programs that can be stored and called up at specific times. For further information please see the Applied Motion Products manuals, available from www.applied-motion.com/support.

UHV DESIGN LTD
ACORN HOUSE
THE BROYLE
RINGMER
EAST SUSSEX
UNITED KINGDOM
BN8 5NN
TEL: +44 (0)1323 811188
www.uhvdesign.com