REVISIONS

Revision	Description	Date approved	Approver
001	Added revision table, modified shaft hole diameter and added fillets and chamfer	05/30/2020	Bordin

Permissible deviations for linear measures (EN)
Desvios permissíveis para dimensões lineares (PT)

Nominal size range in mm (EN) Intervalo nominal em mm (PT)	Tolerance Class (EN) Classe de Tolerância (PT)
0,5 up to (até) 3	±0,05
> 3 up to (até) 6	±0,05
> 6 up to (até) 30	±0,10
> 30 up to (até) 120	±0,15
> 120 up to (até) 400	±0,20
> 400 up to (até) 1000	±0,30

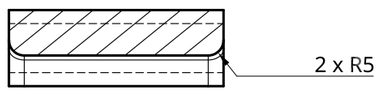

A - A

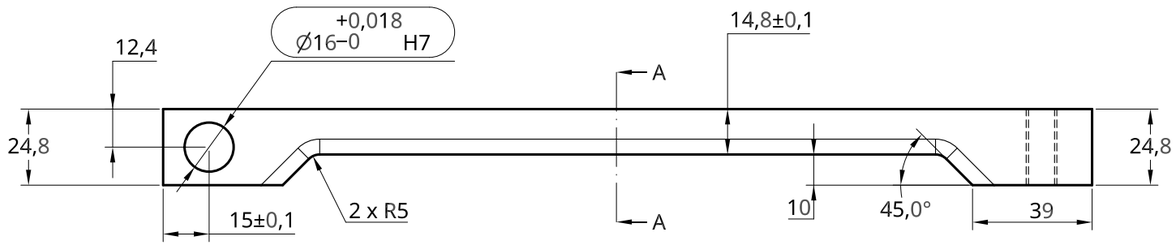

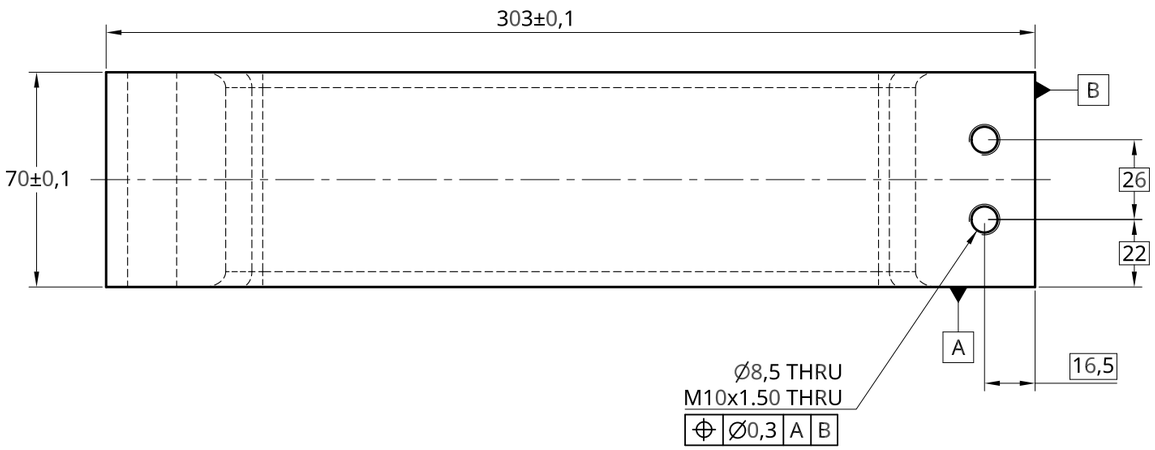

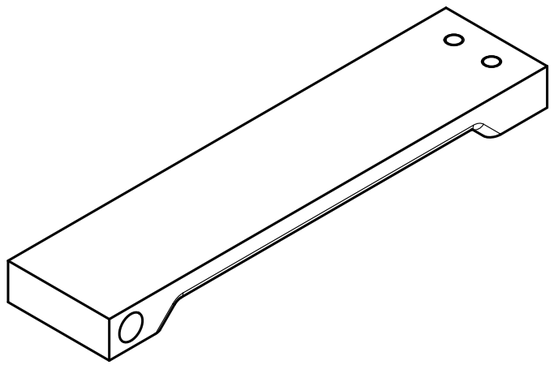

1:3

[EN] Notes:
1) Dimensions without tolerances must respect the values indicated in the table permissible deviation;

[PT] Notas:
1) Dimensões sem campo de tolerâncias devem respeitar valores indicados na tabela de desvios permissíveis

UNLESS OTHERWISE SPECIFIED, DIMENSIONS ARE IN MILLIMETERS ANGULAR = ± ° SURFACE FINISH	STATUS	NAME		DATE
	DRAWN	THRVC		2020-05-12
	UPDATED	AMARALC		2020-05-29
DO NOT SCALE DRAWING	REFERENCES [1] Protofy, https://www.oxygen.protofy.xyz/ [2] OxyGEN Brasil, Voluntários Anônimos			
BREAK ALL SHARP EDGES AND REMOVE BURRS				
FIRST ANGLE PROJECTION	MATERIAL		FINISH	
	NYLON			

PROJECT / GROUP / TEAM: OxyGEN IP / Brasil / hipeerLab

TITLE: SWINGARM BOARD (EN)
BRAÇO OSCILANTE (PT)

SIZE	DWG NO.	PART NO.	REV.
A3	DRW-000253	PRT-000189	001

SCALE	WEIGHT	SHEET
1:2	0,428 kg	1 of 1