# REVISIONS

| Revision | Description | Date approved | Approver |
|---|---|---|---|
| 001 | Added revision table, part number updated templates and change dimension reference | 05/30/2020 | Bordin |

Permissible deviations for linear measures (EN)
Desvios permissíveis para dimensões lineares (PT)

| Nominal size range in mm (EN)<br>Intervalo nominal em mm (PT) | Tolerance Class (EN)<br>Classe de Tolerância (PT) |
|---|---|
| 0,5 up to (até) 3 | ±0,05 |
| > 3 up to (até) 6 | ±0,05 |
| > 6 up to (até) 30 | ±0,10 |
| > 30 up to (até) 120 | ±0,15 |
| > 120 up to (até) 400 | ±0,20 |
| > 400 up to (até) 1000 | ±0,30 |

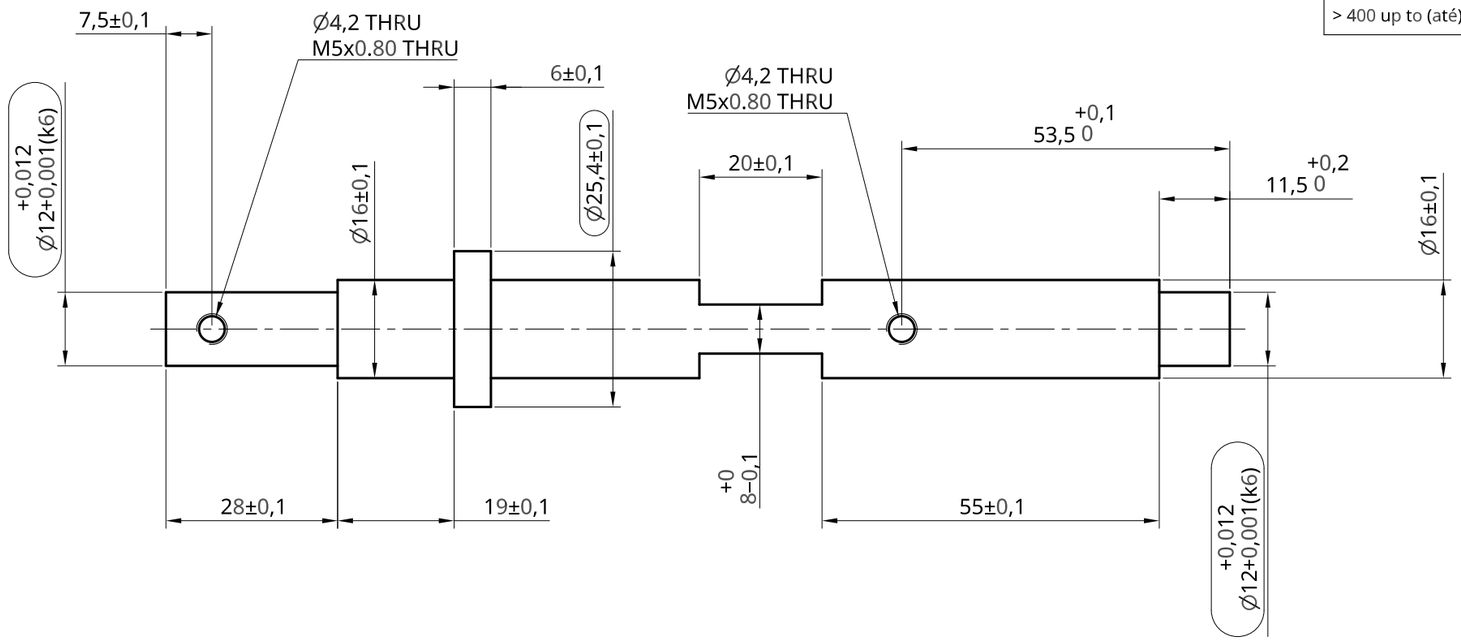


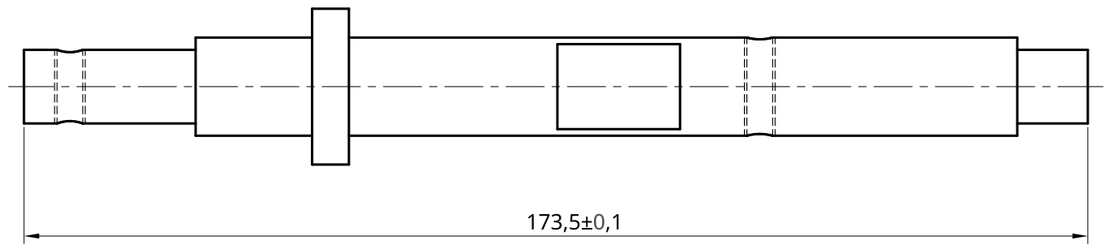


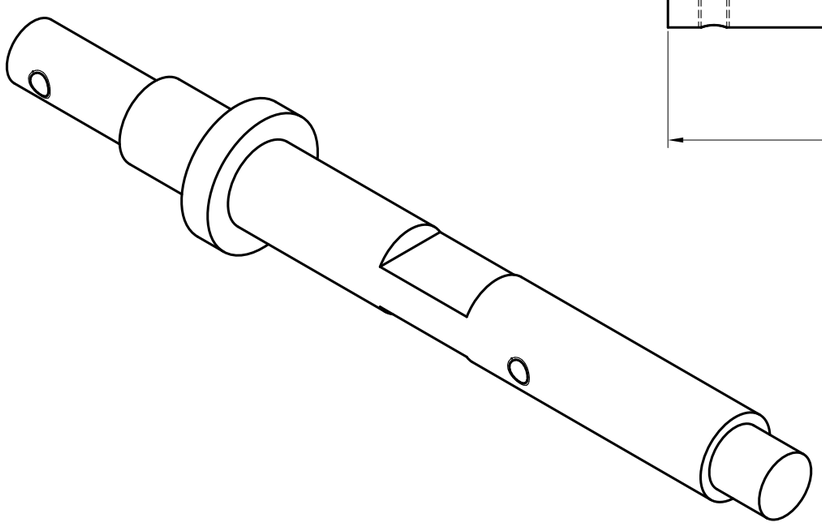

[EN] Notes
1) Dimensions without tolerances must respect the values indicated in the table of permissible deviations;

[PT] Notas
1) Dimensões sem campo de tolerâncias devem respeitar valores indicados na tabela de desvios permissíveis.

| | | | | |
|---|---|---|---|---|
| UNLESS OTHERWISE SPECIFIED, DIMENSIONS ARE IN MILLIMETERS<br>ANGULAR = ± °<br>SURFACE FINISH √ | STATUS | NAME | | DATE |
| | DRAWN | AMARALC | | 2020-05-08 |
| | UPDATED | AMARALC | | 2020-05-29 |
| DO NOT SCALE DRAWING | REFERENCES<br>[1] Protofy, https://www.oxygen.protofy.xyz/<br>[2] OxyGEN Brasil, Voluntários Anônimos | | | |
| BREAK ALL SHARP EDGES AND REMOVE BURRS | | | | |
| FIRST ANGLE PROJECTION | MATERIAL<br>STAINLESS STEEL | | FINISH | |

PROJECT / GROUP / TEAM
OxyGEN IP / Brasil / hipeerLab

TITLE
MOTOR AXIS (EN)
EIXO MOTOR CAME (PT)

| SIZE | DWG NO. | PART NO. | REV. |
|---|---|---|---|
| A3 | DRW-000315 | PRT-000194 | 001 |

| SCALE | WEIGHT | SHEET |
|---|---|---|
| 1:1 | 0,242 kg | 1 of 1 |