REVISIONS			
Revision	Description	Date approved	Approver
003		05/20/2020	AmaralC
004	Show two previous revisionts in revision table	05/20/2020	AmaralC

Desvios permissíveis para dimensões lineares	
Intervalo nominal	Classe de Tolerância
0,5 até 3	±0,05
> 3 até 6	±0,05
> 6 até 30	±0,10
> 30 até 120	±0,15
> 120 até 400	±0,20
> 400 até 1000	±0,30

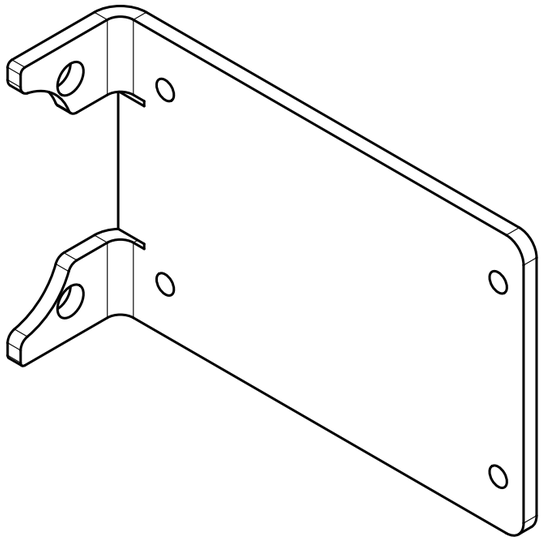

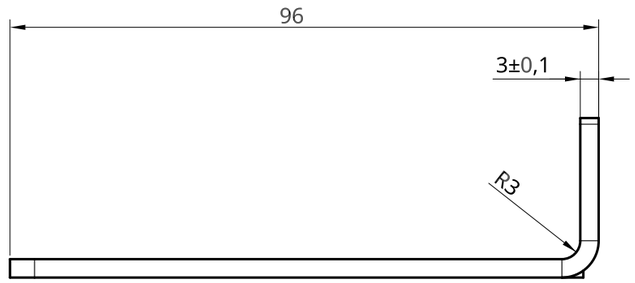

Chapa planificada:

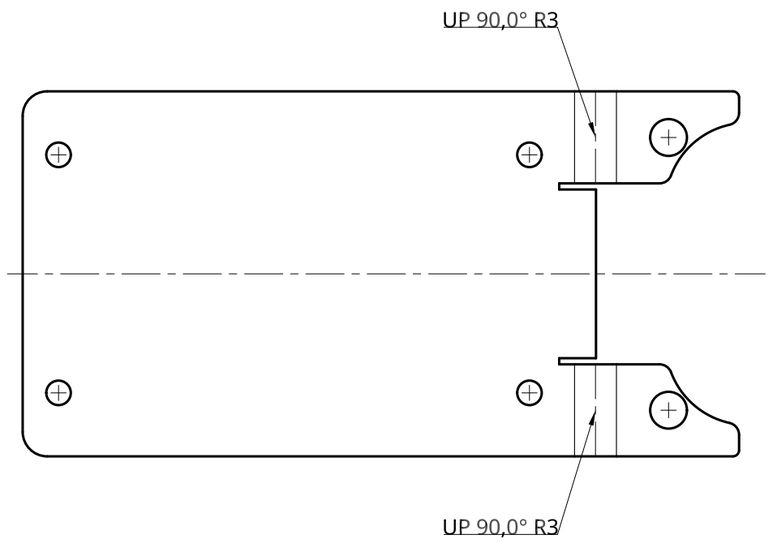

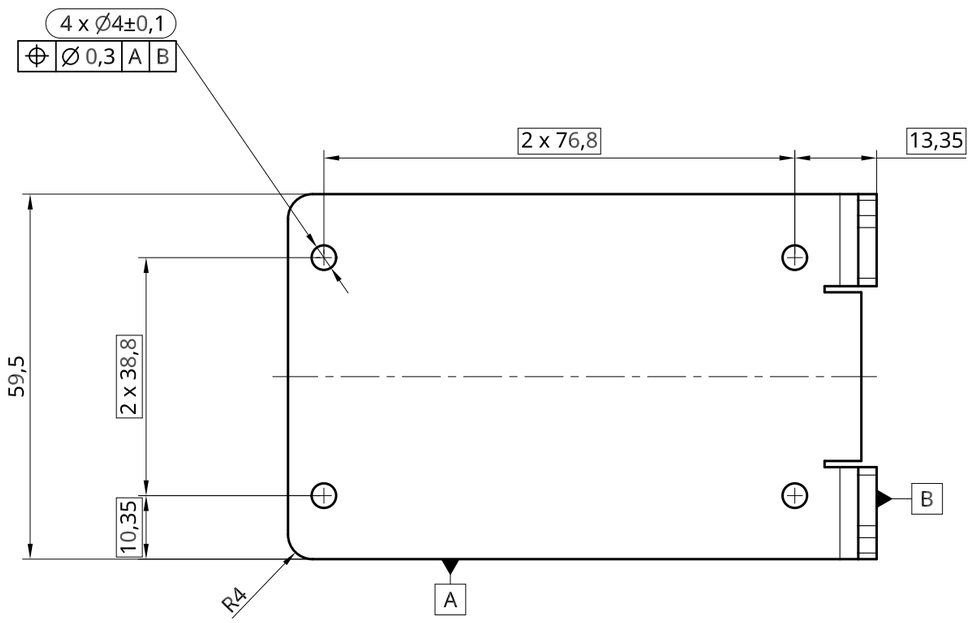

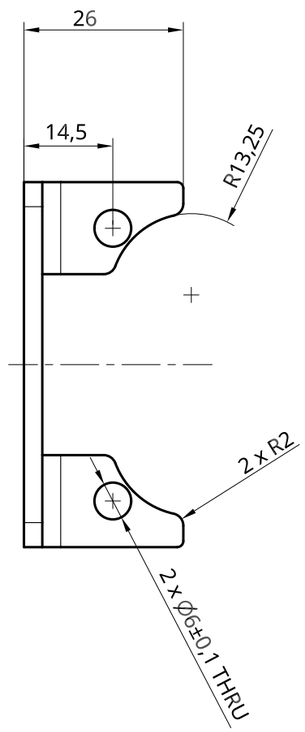

Notas:
1) Espessura da chapa: 3 ± 0,1mm

		NAME	SIGNATURE	DATE
UNLESS OTHERWISE SPECIFIED, DIMENSIONS ARE IN MILLIMETERS	DRAWN	VOLUNT ANONIMOS		2020-04-25
ANGULAR = ± °	TRANSLATED	AMARALC		2020-05-15
SURFACE FINISH √	CHECKED	Theodor van Caspel		2020-05-16
DO NOT SCALE DRAWING	APPROVED	AMARALC		2020-05-18
BREAK ALL SHARP EDGES AND REMOVE BURRS				
FIRST ANGLE PROJECTION	MATERIAL: STAINLESS STEEL		FINISH	

PROJECT / GROUP / TEAM: OxyGEN IP / Brasil / hipeerLab

TITLE: DIMMER SUPPORT (EN)
DIMMER SUPPORT (PT)

SIZE: A3 | DWG NO.: DRW-000085 | REV.: 004

SCALE: 1:1 | WEIGHT: 0,138 kg | SHEET: 1 of 1