VISVESVARAYA TECHNOLOGICAL UNIVERSITY
JNANA SANGAMA, BELAGAVI -590018

PROJECT (21ECP76) REPORT

on

"DESIGN OF OWC USING FIBER BRAGG GRATING"

Submitted in partial fulfillment of the requirements for the award of the degree

BACHELOR OF ENGINEERING
IN
ELECTRONICS AND COMMUNICATION ENGINEERING

Submitted by

ARPITA S BHAT	**1MV21EC018**
HANSIKA G A	**1MV21EC036**
MONISHA D R	**1MV21EC049**
RAGHAVENDRA HIREMATH	**1MV22EC408**

Under the Guidance of :
Dr. Vijayashri V. Belgaonkar
Assistant Professor
Dept. of ECE, Sir MVIT Bengaluru-562157

SIR M. VISVESVARAYA INSTITUTE OF TECHNOLOGY
DEPARTMENT OF ELECTRONICS AND COMMUNICATION ENGINEERING
Bengaluru-562157

2024-25

SRI KRISHNADEVARAYA EDUCATIONAL TRUST
SIR M VISVESVARAYA INSTITUTE OF TECHNOLOGY
(Affiliated to VTU-Belagavi, Recognized by AICTE and Accredited by NBA & NAAC)
Krishnadevarayanagar, Off Kempegowda International Airport Road, Hunasamaranahalli, Bengaluru – 562 157

DEPARTMENT OF ELECTRONICS AND COMMUNICATION ENGINEERING

CERTIFICATE

Certified that the Project (21ECP76) work entitled **" Design of OWC Using Fiber Bragg Grating**" carried out by **Ms. Arpita S Bhat(1MV21EC018), Ms. Hansika G A (1MV21EC036), Ms. Monisha D R (1MV21EC049), Mr. Raghavendra Hiremath(1MV22EC408)** the bonafide students of Sir M. Visvesvaraya Institute of Technology in partial fulfillment for the award of Bachelor of Engineering in Electronics and Communication Engineering of the Visvesvaraya Technological University, Belgaum during the year 2024-25. It is certified that all corrections/suggestions indicated for Internal Assessment have been incorporated in the Report deposited in the departmental library. The project report has been approved as it satisfies the academic requirements for Major-Project work prescribed for the said Degree.

Dr. Vijayashri V. Belgaonkar	**Dr. Sasmita Mohapatra**	**Prof. Rakesh S.G**
Assistant Professor	Professor and Head	Principal
Dept. of ECE, Sir MVIT	Dept. of ECE, Sir MVIT	Sir MVIT, Bengaluru

External Examination:

Name of the examiners Signature with date

1)

2)

ACKNOWLEDGEMENT

The satisfaction and euphoria that accompany completing any task would be incomplete without the mention of the people who made it possible, whose constant guidance and encouragement ground our efforts with success.

We consider it a privilege to express our gratitude and respect to all those who guided us in completing the major-project.

It's a great privilege to place on record our deep sense of gratitude to the Management and **Prof. Rakesh S.G,** Principal, Sir M. Visvesvaraya Institute of Technology who patronized throughout our career & for the facilities provided to carry out this work successfully.

It's a great privilege to place on record our deep sense of gratitude to **Dr. Sasmita Mohapatra,** Professor and Head, Dept. of Electronics and Communication Engineering, Sir M. Visvesvaraya Institute of Technology who patronized throughout our career & for the facilities provided to carry out this work successfully.

We are grateful to our guide **Dr. Vijayashri V. Belgaonkar,** Assistant Professor, Department of ECE, Sir M. Visvesvaraya Institute of Technology. We thank the teaching and non-teaching staff members who have helped us directly or indirectly during the project.

Finally, we thank our family and friends for their cooperation and motivation to complete this project successfully.

ARPITA S BHAT(1MV21EC018)

HANSIKA G A (1MV21EC036)

MONISHA D R(1MV21EC049)

RAGHAVENDRA HIREMATH(1MV22EC408)

DECLARATION

We, students of the 7th semester hereby declare that the project report on "**DESIGN OF OWC USING FIBER BRAGG GRATING**" has been presented under the guidance of Dr.Vijayashri V. Belgaonkar, Assistant Professor, Department of Electronics and Communication Engineering, Sir M. Visvesvaraya Institute of Technology, Bengaluru as partial fulfillment of the requirement for the award of Bachelor of Engineering in Electronics & Communication Engineering by Visvesvaraya Technological University, Belagavi during the academic year 2024-2025. This topic has not been submitted previously for any degree or diploma of any institution.

Place: Bengaluru
Date: 5-02-2025

ARPITA S BHAT(1MV21EC018)

HANSIKA G A(1MV21EC036)

MONISHA D R(1MV21EC049)

RAGHAVENDRA HIREMATH(1MV22EC408)

ABSTRACT

The Project focuses on the design and implementation of an Optical Waveguide Coupler (OWC) utilizing Fiber Bragg Grating (FBG) technology. The Optical Waveguide Coupler plays a critical role in optical communication systems, allowing for efficient power coupling between optical fibers. Fiber Bragg Grating, a key component of modern photonic devices, provides precise wavelength filtering, reflection, and transmission properties, making it an ideal candidate for coupling applications. This project aims to design an OWC that leverages FBG for enhanced performance, such as reduced insertion loss and improved coupling efficiency. By integrating FBG into the coupler design, the project explores the optimization of the coupling process, considering factors such as grating periodicity, fiber alignment, and the operational wavelength range. The design is validated through simulation and experimental testing, with an emphasis on practical deployment in communication systems and sensors. The results are expected to provide significant insights into the potential of FBG-based couplers in enhancing the capabilities of modern optical networks.

TABLE OF CONTENTS

1. INTRODUCTION.....1-2

2. PROBLEM STATEMENT.....3

3. LITERATURE SURVEY.....4-7

4. OBJECTIVES 8

5. METHODOLOGY.....9-15

6. SOFTWARE DETAILS.....16-20

7. RESULTS AND DISCUSSIONS..... 21-28

8. ADVANTAGES AND LIMITATIONS..... 29-30

9. APPLICATIONS..... 31

10. CONCLUSION AND FUTURE SCOPE.....32

REFERENCES..... 34

CHAPTER-1

INTRODUCTION

The communication industry is experiencing a paradigm shift as the demand for higher data rates, faster transmission speeds, and more reliable networks grows at an exponential rate. As modern applications—ranging from Internet of Things (IoT) devices to high-definition video streaming and cloud computing—continue to drive the need for enhanced data transmission, traditional wireless communication technologies, especially those based on radio frequency (RF), are beginning to face limitations. RF communication systems, while widely used, are constrained by issues such as limited bandwidth, susceptibility to interference, and regulatory challenges related to the use of frequency spectrums. Consequently, researchers and engineers are turning to more advanced, efficient, and high-capacity alternatives to overcome these barriers.

One promising solution that has emerged in recent years is Optical Wireless Communication (OWC), which uses light waves—typically in the visible, infrared, or ultraviolet spectrum—for transmitting data wirelessly. OWC systems take advantage of the vast bandwidth available in the optical spectrum, offering significant improvements over traditional RF systems in terms of data rates, security, and resistance to interference. In particular, OWC has gained significant attention in scenarios where high-speed communication is required in short-range applications or where RF signals are unsuitable. This includes use cases in indoor environments, smart homes, autonomous vehicles, and secure communication links, as well as in satellite and space communications. Furthermore, OWC systems are also less susceptible to electromagnetic interference (EMI), which is a persistent issue in many wireless communication applications.

Despite its advantages, OWC systems face unique challenges that must be addressed in order to ensure reliable, efficient, and high-quality data transmission. These challenges include signal attenuation due to atmospheric conditions, misalignment of optical transmitters and receivers, and interference from environmental factors such as dust, moisture, or temperature variations. Moreover, the precise alignment of optical components and the overall system integrity are critical to the successful deployment of OWC systems, particularly in complex, dynamic environments. Thus, the need for effective monitoring and optimization solutions becomes essential to ensure that the system performs at its best over time, minimizing the risk of communication failure or degradation in signal quality.

This is where Fiber Bragg Grating (FBG) technology comes into play. FBGs are a type of optical sensor that has gained widespread use in a variety of applications due to their exceptional sensitivity to physical parameters like strain, temperature, and vibration. An FBG is a segment of optical fiber that has been periodically altered to create a series of microstructures (gratings) inside the fiber, which reflect light of specific wavelengths based on the grating period. These sensors are highly sensitive to external changes, such as deformation or thermal fluctuations, and can detect even minute variations in strain or temperature with remarkable precision. This makes them ideal for monitoring the physical conditions of optical communication systems in real time.

The integration of FBG sensors into Optical Wireless Communication systems offers a significant advantage in ensuring the performance, reliability, and resilience of the communication link. By embedding FBGs in key components of the system—such as the optical transmitters, receivers, and fiber-optic cables—it becomes possible to continuously monitor factors like temperature fluctuations, mechanical strain, vibration, and alignment. These parameters are crucial to maintaining the stability and quality of the optical signal being transmitted. FBGs can, for instance, detect misalignment of optical components or the onset of mechanical strain that might indicate a potential failure, allowing for early intervention and maintenance. Furthermore, the use of FBG sensors can provide valuable insights into the overall structural health of the OWC system, helping to optimize its operation and reduce downtime caused by unexpected failures or misalignments.

Additionally, FBGs offer several unique benefits for OWC systems that make them particularly well-suited for these applications. Unlike traditional electronic sensors, FBGs are immune to electromagnetic interference, which is a major advantage in environments where external sources of electromagnetic radiation can cause signal distortion or corruption. The optical nature of FBGs also allows them to be integrated seamlessly into the fiber-optic communication infrastructure without introducing additional electrical complexity. Moreover, FBGs are lightweight, compact, and corrosion-resistant, making them an ideal fit for deployment in challenging environments, such as those found in outdoor or marine-based OWC systems.

Thus, integrating Fiber Bragg Grating technology into Optical Wireless Communication systems significantly enhances performance and reliability. FBG sensors enable real-time monitoring, fault detection, and system optimization. This approach offers secure, high-speed communication with minimal interference. Ultimately, FBG-based OWC systems represent a promising solution for advanced wireless communication networks.

CHAPTER-2

PROBLEM STATEMENT

Design of Optical Wireless Communication (OWC) using Fiber Brag Grating (FBG)

1. Challenges in OWC Systems: As traditional radio frequency-based wireless communication systems face limitations in bandwidth, interference, and security, Optical Wireless Communication (OWC) systems offer a promising alternative with higher data rates and immunity to electromagnetic interference. However, OWC systems are susceptible to challenges such as misalignment, signal attenuation, and environmental factors, which can affect their performance and reliability.

2. Solution with FBG Integration: To address these issues, Fiber Bragg Grating (FBG) technology can be integrated into OWC systems to provide real-time monitoring of parameters like strain, temperature, and alignment. The challenge lies in effectively incorporating FBG sensors into the OWC infrastructure to optimize performance, detect faults early, and ensure continuous, high-quality communication in dynamic and harsh environments.

CHAPTER-3

LITERATURE SURVEY

1. "Investigation of OWC System Incorporating Different Filters", Meet Kumari, Neha Sharma, Rahul Chauhan, 4th International Conference on Innovative Practices in Technology and Management (ICIPTM 2024)

The Optical Wireless Communication (OWC) system has emerged as a promising solution for high-speed and long-range data transmission, and it is rapidly gaining attention due to its potential applications in the evolving 5G wireless network infrastructure. OWC, which utilizes light waves—such as infrared or visible light—offers several advantages over traditional radio frequency (RF) communication, including the potential for higher bandwidth, reduced interference, and enhanced security. The study presented in this work focuses on the design, simulation, and performance evaluation of a 4×10 Gbps OWC system, which is configured to achieve an aggregate data rate of 40 Gbps by using four separate channels, each capable of transmitting data at 10 Gbps. This configuration represents a significant advancement in OWC technology, as it aims to address the high-throughput demands of next-generation wireless networks.

The system integrates three different types of filters—**Rectangular**, **Butterworth**, and **Bessel**—to optimize the signal quality and manage the spectral characteristics of the transmitted data. Filters play a crucial role in communication systems by shaping the signals, reducing noise, and mitigating signal distortions, which is especially important in high-speed data transmissions. The **Rectangular filter**, known for its sharp frequency cutoff and constant passband, was chosen as one of the options in the study due to its simplicity and efficiency in handling high-speed signals. The **Butterworth filter**, on the other hand, is well-regarded for its smooth frequency response and minimal distortion in the passband, making it a good candidate for reducing signal noise. Finally, the **Bessel filter** is included for its ability to maintain phase linearity, which helps to preserve the integrity of the signal waveform and reduce time-domain distortion—an important feature in maintaining signal clarity, especially in high-speed systems.

2. "Design of OWC System Using RZ/NRZ Data Formats", Kireet Joshi, Amit Kumar, Neha Sharma, 2024 Asia Pacific Conference on Innovation in Technology (APCIT) Jul 26-27, 2024

The demand for high-bandwidth, long-haul communication systems is expected to rise significantly in the near future, as advancements in technology and the increasing reliance on data-driven applications push the need for faster and more reliable communication networks. Optical wireless communication (OWC) is emerging as a promising solution for meeting these demands, particularly due to its ability to deliver high-speed data transmission over long distances. One of the key challenges in designing such systems is determining the optimal data formats that can efficiently handle high throughput while ensuring reliable communication over extended distances. In response to this challenge, a high-speed 40Gbps OWC architecture has been proposed, which explores the use of two different data formats: Non-Return to Zero (NRZ) and Return to Zero (RZ). These formats define the way in which digital data is encoded for transmission, and each format has distinct characteristics that can affect the performance of the communication system.

The NRZ format is one where each bit of data is represented by a constant signal level, either high or low, throughout the entire bit period. This encoding scheme is often preferred in high-speed communication systems, as it reduces the number of transitions in the signal and, therefore, can achieve higher data rates with less energy consumption. On the other hand, the RZ format requires the signal to return to zero within each bit period, which can be beneficial in reducing inter-symbol interference and aiding in timing synchronization. However, the RZ format is typically less efficient at higher data rates because of its more frequent signal transitions, which require more bandwidth and are more prone to signal degradation over long distances.

Moreover, the study reveals that the transmission range of the system can be extended even further when the data rate is lowered. At a reduced traffic rate of 5Gbps, both the NRZ and RZ formats are capable of supporting reliable communication over a much longer distance, reaching up to 135 kilometers .By offering superior performance at high speeds and extended range at lower data rates, this OWC architecture has the potential to significantly enhance the efficiency and reliability of next-generation communication networks, especially in long-haul, high-bandwidth applications. This study paves the way for the development of more advanced optical wireless communication systems capable of meeting the growing demands for faster, more reliable, and cost-effective data transmission.

3. "Modified Duobinary RZ modulation OWC for Bengaluru Weather Conditions", Arpita S. Bhat, Hansika G A, Monisha D R, Vijayashri V. Belgaonkar, Supriya V. G., Shweta Madiwalar, 8th International Conference on Computational System and Information Technology for Sustainable Solutions (CSITSS) 2024

In the realm of optical wireless communication (OWC), adverse weather conditions, such as heavy rainfall, can significantly degrade signal quality and transmission reliability, especially in urban regions like Bengaluru. These weather conditions, characterized by frequent rain and humidity, lead to increased attenuation of the optical signal, which can result in a drop in performance for OWC systems. Traditional modulation techniques used in OWC, such as On-Off Keying (OOK), face challenges under such conditions because they may not effectively combat the signal degradation caused by factors like scattering, absorption, and turbulence in the atmosphere. This paper introduces a solution in the form of a Modified Duobinary Return-to-Zero (RZ) modulation scheme, which is specifically designed to mitigate the detrimental effects of such weather conditions on signal transmission in Bengaluru.

The Duobinary RZ modulation technique, by nature, offers improved spectral efficiency and robustness against noise compared to conventional schemes, making it an ideal candidate for combating the signal degradation seen in OWC systems in regions prone to harsh atmospheric conditions. In traditional Duobinary modulation, each bit is represented by three distinct signal levels, reducing the bandwidth requirements without significantly affecting the data rate. When modified with the RZ format, where the signal has a return-to-zero pulse structure, the scheme further enhances the system's noise resilience by reducing the likelihood of intersymbol interference (ISI) that often occurs in high-noise environments. This is particularly important for OWC systems in Bengaluru, where signal quality can fluctuate due to varying weather patterns.

The study involves simulations that will model the effects of weather-induced attenuation, and performance metrics such as the Quality factor (Q factor) and Bit Error Rate (BER) will be used to evaluate the system's effectiveness. The Q factor, which is a measure of signal quality, and the BER, which quantifies the number of errors in transmission, will help in understanding how well the proposed modulation scheme performs under various weather conditions.

4. "Analysis and Optimization of Optical Communication Systems According to Transmission Channels", Ibrahim OZTURK, N. Ozlem UNVERDI, 32nd Signal Processing and Communications Applications Conference (SIU) 2024

The study differentiates between two types of systems—**wired optical systems** (which use **fiber optic cables**) and **wireless optical systems** (which use **Free-Space Optical (FSO)** or **Optical Wireless Communication (OWC)** channels). Both systems are designed using **Wavelength Division Multiplexing (WDM)**, a technique that allows multiple signals to be transmitted simultaneously over the same optical fiber by using different wavelengths (or channels). This increases the overall capacity of the communication system, allowing for efficient data transmission.

In the study, the performance of these systems is evaluated based on the impact of various key components and parameters. These include the **pulse generator** (which shapes the optical pulses), the **modulator** (which encodes the data onto the optical signal), the **optical amplifier** (which boosts the signal strength), the **photodetector** (which converts the optical signal back into electrical form), and the **filter** (which helps remove unwanted noise or frequencies). Additionally, the **operating wavelength**, which refers to the specific frequency of light used for transmission, is also assessed, as different wavelengths can affect system performance. The **communication line length** is another important factor, as the longer the distance the signal must travel, the more signal degradation or loss occurs. Finally, the number of channels used in the system is considered, as more channels can increase the data throughput but may also introduce more complexity and potential for interference.

The performance of the systems is primarily evaluated through the **Bit Error Rate (BER)**, which indicates the rate at which errors occur in the transmission process. The **eye diagram** is another key metric used in the analysis, as it visually represents the signal integrity and helps assess the system's reliability. The **maximum quality factor (Q-factor)** is also used as a performance measure, providing a quantitative assessment of the system's ability to distinguish between different signal states and thus ensuring the clarity of the transmitted data.

CHAPTER-4

OBJECTIVES

- **Real-time Performance Monitoring:** The primary goal is to integrate Fiber Bragg Grating (FBG) sensors into the OWC system to enable continuous, real-time monitoring of critical parameters such as strain, temperature, and vibration. FBG sensors provide highly accurate data on these parameters, allowing the system to dynamically assess its operational health. By constantly tracking these conditions, the system can identify performance deviations early on, ensuring that any issues affecting communication are detected before they become critical. This objective ensures that the OWC system maintains a high level of performance even in dynamic and challenging environments.
- **Fault Detection and Prevention**: Another key objective is to leverage FBG technology for early detection of faults or potential failures in the OWC system, such as misalignment of optical components, mechanical strain, or other environmental changes that may impact signal quality. By embedding FBG sensors at key locations throughout the system, real-time data can be analyzed to detect subtle changes that could lead to failure, allowing for preventive maintenance. This proactive approach to fault detection and system monitoring minimizes downtime, reduces the risk of communication loss, and enhances the overall reliability of the OWC system.
- **System Optimization**: The design aims to utilize FBG sensors to optimize the alignment and operational efficiency of optical components in the OWC system. Environmental factors, such as temperature fluctuations or mechanical strain, can affect the alignment and efficiency of the optical communication link. FBG sensors can provide data on these factors, enabling adjustments to optimize signal transmission and minimize losses. By continuously monitoring these conditions, the system can be adjusted for optimal performance, ensuring a stable and high-quality communication link. This objective contributes to maximizing the system's overall efficiency and lifespan, reducing the need for frequent maintenance or adjustments.

CHAPTER-5

METHODOLOGY

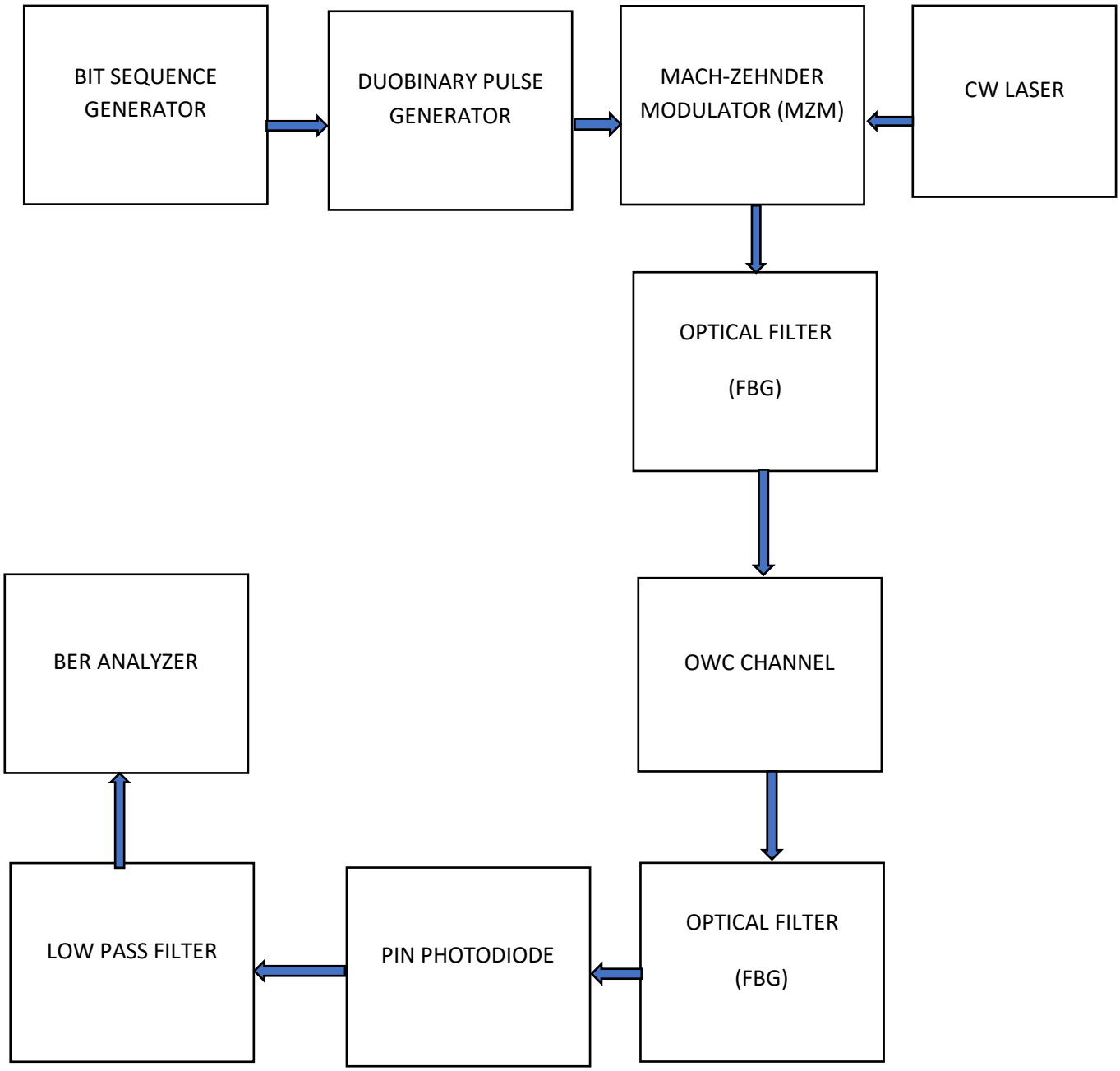

Fig 5.1: Block diagram of design of OWC using fiber bragg grating

BLOCK DIAGRAM

The block diagram depicts a setup for optical communication, likely used to test and analyze the performance of a system using Duobinary modulation.

Transmitter Side:

- Bit Sequence Generator: Generates a random sequence of bits (0s and 1s) representing the data to be transmitted.
- Duobinary Pulse Generator: Converts the bit sequence into Duobinary pulses, a modulation format used in optical communication for its bandwidth efficiency and reduced inter-symbol interference.
- Mach-Zehnder Modulator (MZM): Modulates the intensity of the light from the CW laser according to the Duobinary pulses.
- CW Laser: Provides a continuous wave (CW) light source for the system.
- Optical Filter (FBG): Filters the light to remove unwanted wavelengths and noise, ensuring a clean signal for transmission.
- OWC Channel: Represents the optical fiber or other medium used to transmit the modulated light signal.

Receiver Side:

- Optical Filter (FBG): Filters the received light signal to remove unwanted wavelengths and noise.
- PIN Photodiode: Converts the received optical signal into an electrical signal.
- Low Pass Filter: Removes high-frequency noise from the electrical signal.
- BER Analyzer: Analyzes the received bit sequence to calculate the Bit Error Rate (BER), a key performance metric for communication systems.

Key points about the system:

- Duobinary Modulation:This modulation technique helps in achieving higher spectral efficiency compared to some other modulation schemes.
- Optical Filtering: FBGs (Fiber Bragg Gratings) are used to filter the optical signals, ensuring that only the desired wavelengths are transmitted and received.
- BER Analysis: BER analyzer is crucial for assessing the performance of the communication system, indicating the reliability of the data transmission.

Here are some relevant equations,

Duobinary Encoding:

- Encoded Signal:
  - $y[n]=x[n]+x[n-1]$ (1)
  - Where x[n] is the original binary data, and y[n] is the encoded duobinary signal

Mach-Zehnder Modulator(MZM):

- Output Optical Field:
  - $E_{out} = E_{in}.\cos(\frac{\pi V}{V_\pi})$ (2)
  - Where E_{in} is the input optical field,V is the applied voltage,and V_π is the half-wave voltage of the MZM.

Bit Error Rate(BER):

- BER:
  - $BER = \frac{1}{2}\,\mathrm{erfc}(\sqrt{\frac{SNR}{2}})$ (3)
  - Where erfc is the complemenrary error function,and SNR is the signal-to-noise ratio.

Optical Filter(FBG):

- Bragg Wavelength:
  - $\lambda_B = 2n_{eff}\,d$ (4)
  - Where λ_B is the Bragg Wavelength,n_{eff} is the effective refractive index of the fiber,and d is the grating period.

Received Power

- $P_r = P_tG_tG_re^{-\alpha d}$ (5)

PIN Photodiode Current Response

  - The Photocurrent is given by:$I_{ph} = RP_r$ (6)

Bit Error Rate(BER) Estimation

- For an OOK system :
  - $BER = Q(\frac{I1-I0}{\sigma})$ (7)
  - Q(x) is the Q-function .I1 and I0 are the photocurrents for logic ‘1’ and ‘0’ σ,is the noise standard deviation.

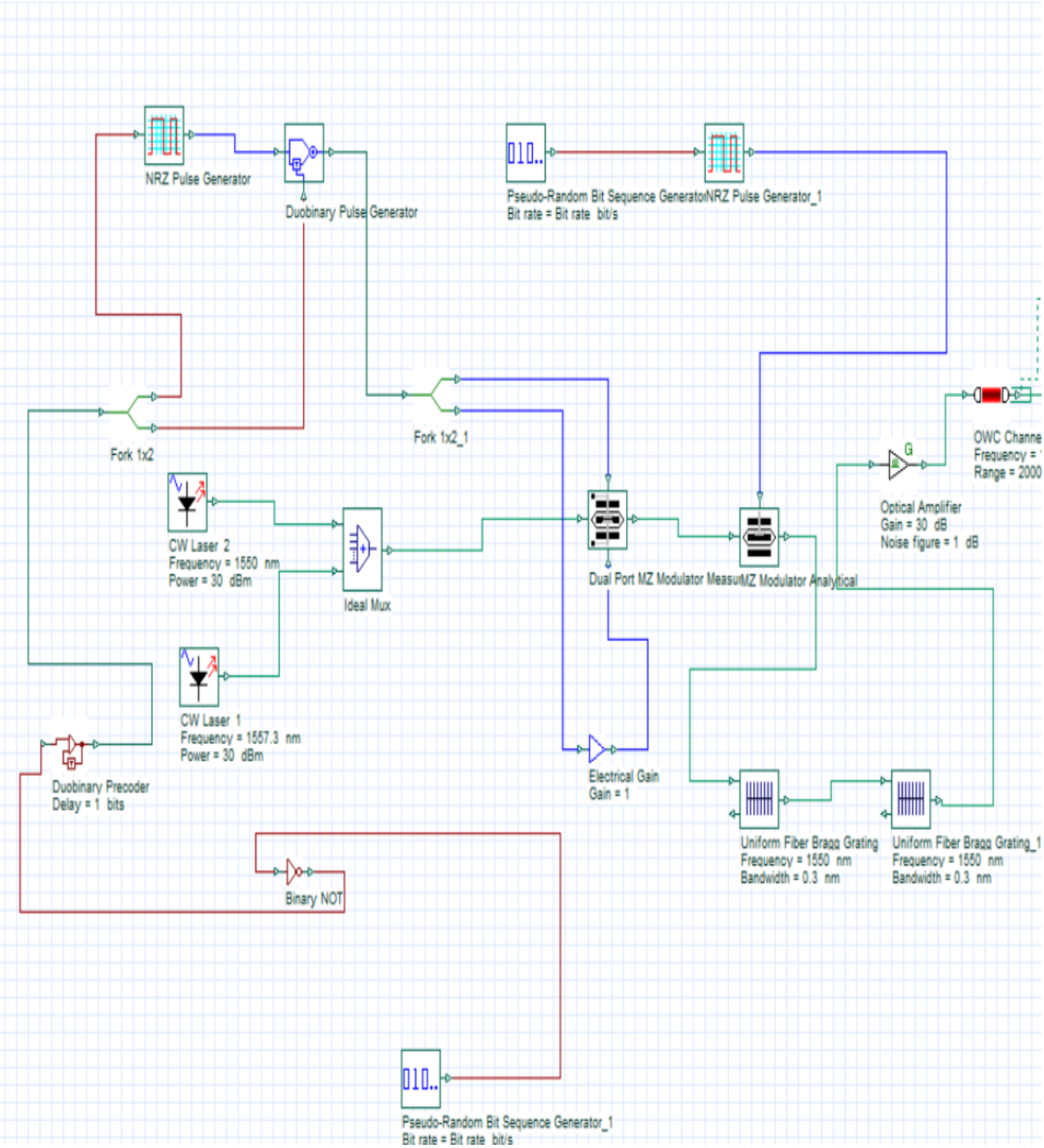

Fig 5.1 Block diagram of Transmitter part of OWC using Fiber Bragg Grating

The above block diagram represents the transmitter section of an Optical Wireless Communication (OWC) system that incorporates Fiber Bragg Grating (FBG) for signal processing. Here's a breakdown of its components and functionality:

- Data Generation & Modulation
  - ❖ Pseudo-Random Bit Sequence Generator: Generates a random digital data stream.
  - ❖ Duobinary Pulse Generator: Converts the bit stream into a duobinary format to reduce bandwidth.
  - ❖ Duobinary Precoder: Adds a 1-bit delay to ensure proper duobinary coding.
  - ❖ Binary NOT Gate: Inverts the binary signal for differential encoding.
- Optical Signal Generation
  - ❖ CW Laser Sources: Two continuous-wave (CW) lasers with wavelengths 1650 nm and 1657.3 nm generate the optical carriers.
  - ❖ Ideal Mux (Multiplexer): Combines the optical signals from both CW lasers.
- Modulation & Amplification
  - ❖ Dual Port MZ (Mach-Zehnder) Modulator: Modulates the optical signals based on the duobinary encoded electrical signals.
  - ❖ Electrical Gain Block: Amplifies the modulating electrical signal.
  - ❖ Optical Amplifier: Boosts the modulated optical signal to ensure proper transmission
- Filtering & Transmission
  - ❖ Uniform Fiber Bragg Grating (FBG): Two FBGs are used for wavelength filtering:
  - ❖ FBG 1 at 1650 nm
  - ❖ FBG 2 at 1657.3 nm
  - ❖ These help in wavelength selection and dispersion compensation before transmission.
  - ❖ OWC Channel: Represents the free-space optical transmission medium.
- Purpose of Fiber Bragg Gratings
  - ❖ FBGs are used for:
  - ❖ Filtering specific wavelengths to minimize interference.
  - ❖ Dispersion compensation to maintain signal integrity.
  - ❖ Enhancing system performance by reducing noise.
- This transmitter section prepares the optical signal before it is sent through the OWC channel, where it will be received and decoded at the receiver end.

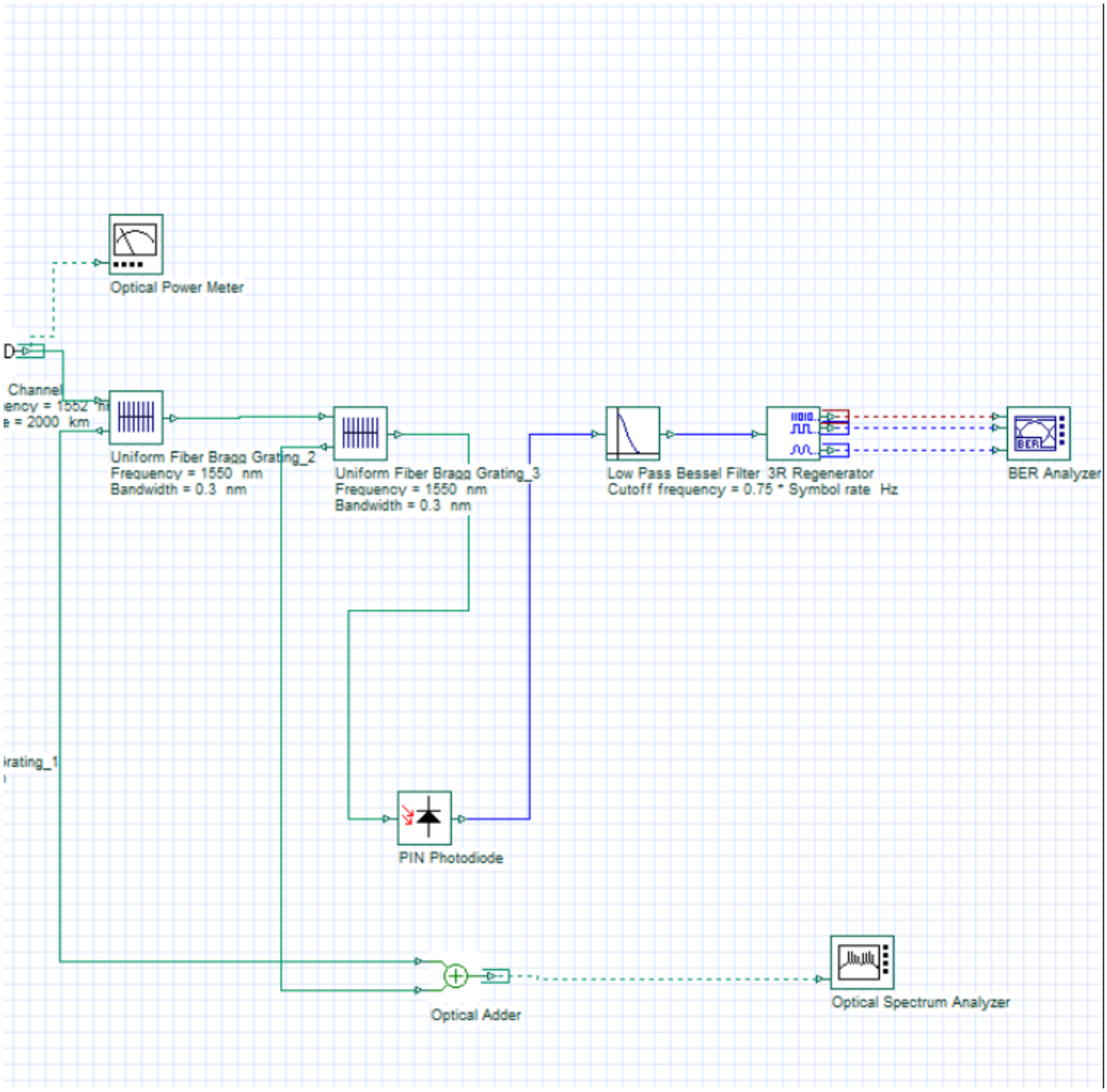

Fig 5.2 Block diagram of receiver part of OWC using Fiber Bragg Grating

This is the receiver section of an Optical Wireless Communication (OWC) system using Fiber Bragg Grating (FBG). Here's a breakdown of the components and their functions:

- Channel (Optical Fiber Link)
  - The received optical signal is transmitted through a fiber channel of 2000 km.
  - The fiber introduces dispersion and attenuation.

- Optical Power Meter
  - Measures the received optical power for monitoring signal strength.

- Uniform Fiber Bragg Grating (FBG) Filters
  - ❖ Two FBGs with center wavelengths of 1550 nm and 1552 nm, each with a bandwidth of 0.3 nm, act as optical filters.
  - ❖ They selectively reflect specific wavelengths while allowing others to pass.
  - ❖ This helps in demultiplexing and reducing signal distortion.
- PIN Photodiode
  - ❖ Converts the received optical signal into an electrical signal.
- Optical Adder
  - ❖ Combines multiple optical signals before photodetection.
- Low Pass Bessel Filter
  - ❖ Filters out high-frequency noise while preserving the useful signal.
- 3R Regenerator
  - ❖ Performs Re-amplification, Re-shaping, and Re-timing to restore signal quality.
- BER Analyzer
  - ❖ Measures the Bit Error Rate (BER) to evaluate system performance.
- Optical Spectrum Analyzer
  - ❖ Analyzes the received optical signal spectrum.

This setup ensures efficient optical signal reception, filtering, and detection, crucial for long-distance OWC applications.

CHAPTER-6

SOFTWARE DETAILS

For designing Optical Wireless Communication (OWC) systems using Fiber Bragg Gratings, we use **OptiSystem** software. **OptiSystem** is a comprehensive software suite developed by **Optiwave Systems** for the design, simulation, and analysis of optical communication systems. It is widely used in industries like telecommunications, photonics, and research to model and optimize the performance of optical systems.

OptiSystem enables users to simulate complex optical communication systems, including both **transmission** and **reception** over optical fibers or free-space environments. The software is particularly useful for simulating a wide range of systems such as **fiber-optic communication** networks, **optical interconnects**, **Wavelength Division Multiplexing (WDM)** systems, and **Optical Wireless Communication (OWC)** systems, incorporating components like **Fiber Bragg Gratings (FBGs)**, lasers, amplifiers, modulators, and photodetectors.

Salient Features Of Optisystem

- **System-Level Simulation**: Design, simulate, and analyze entire optical communication systems, including fiber-optic links, transmitters, receivers, and amplifiers.
- **Comprehensive Component Library**: Includes a vast library of optical components such as lasers, modulators, photodetectors, Fiber Bragg Gratings (FBGs), multiplexers, filters, and amplifiers.
- **Advanced Modulation Formats**: Supports complex modulation formats like QPSK, 16-QAM, OFDM, and others for realistic optical system design.
- **Fiber and Link Modeling**: Models different types of fibers (e.g., standard single-mode, dispersion-shifted) and simulates their impact on signal propagation.
- **Error Analysis Tools**: Provides built-in tools for evaluating key performance metrics like Bit Error Rate (BER), Signal-to-Noise Ratio (SNR), and Eye Diagrams.
- **Multi-Domain Simulation**: Simulate optical, electrical, and software-based systems together for comprehensive analysis and optimization.
- **Customization and Scripting**: Users can write scripts using MATLAB or similar languages to automate tasks or create customized models.

- **Graphical User Interface (GUI)**: Provides an intuitive drag-and-drop interface to build and simulate systems.
- **Real-Time Visualization**: Offers real-time simulation and visualization of system performance through plots, eye diagrams, and signal constellations.

Procedure for Using OptiSystem

- **Start a New Project**: Open OptiSystem and create a new project by selecting "New Project" from the File menu.
- **Add Components**: Drag and drop components (like transmitters, fibers, receivers, FBGs, amplifiers) from the library onto the workspace.
- **Configure Components**: Double-click on each component to configure parameters such as wavelength, power levels, modulation types, fiber lengths, etc.
- **Build the System**: Connect components using optical fibers or electrical connections to create an optical link, network, or system.
- **Simulate the System**: Set the simulation parameters (e.g., simulation time, signal frequency) and click "Run" to start the simulation.
- **Analyze Results**: Use the built-in analysis tools to evaluate performance metrics like Bit Error Rate (BER), SNR, Eye Diagrams, and power spectra.

Compiling Procedure in OptiSystem

- **Check Design Configuration**: Ensure that all components are properly connected and that the system is correctly configured for simulation (e.g., check the wavelength, modulation formats, and fiber parameters).
- **Set Up Simulation Parameters**: Define the simulation time, sampling rate, and any specific parameters related to your optical communication system.
- **Run the Simulation**: Click on the "Run" button (usually a green play button) to start the simulation. The software will automatically compile and run the simulation based on the components and settings defined in your design.
- **View Results** :After running the simulation, view the results using plots, eye diagrams, and other visual tools available within OptiSystem. You can export the results for further analysis if needed.
- **Adjust and Recompile**: If results are unsatisfactory, adjust component configurations or system settings, and re-run the simulation as needed.

To run an **Optical Wireless Communication (OWC)** simulation using **Fiber Bragg Grating (FBG)** in OptiSystem, we need to follow the basic software requirements for OptiSystem.

Key Components for OWC using FBG

- **Optical Wireless Communication (OWC):** This involves simulating wireless optical communication links, which could be based on free-space optics (FSO), Li-Fi, or other optical wireless technologies.
- **Fiber Bragg Grating (FBG):** FBGs are used for filtering or controlling optical signals in fiber-optic systems. They can be modeled to simulate wavelength division multiplexing (WDM), signal filtering, or dispersion compensation in optical communication systems.

Software Requirements:

OptiSystem software will need to be compatible with the OWC and FBG modules you're planning to use. The basic requirements include:

- **Windows 10 (64-bit) or later** for the operating system.
- **.NET Framework** and **Microsoft Visual C++ Redistributable Packages** for proper software functioning.

For specific FBG and OWC simulations, ensure that:

- The required **OptiSystem libraries for OWC (such as free-space optical links, wireless modulation schemes)** are available.
- **FBG components** are present in your OptiSystem installation (usually part of the fiber-optic simulation modules).
- **FBG Simulation Elements**: OptiSystem typically includes components such as:
    - **FBG Reflector**: Used for filtering or reflecting certain wavelengths.
    - **FBG Filter**: Used in wavelength division multiplexing (WDM) systems.
    - **FBG-based components**: For dispersion compensation or for custom designs.
- **OWC Simulation Elements**: Some of the components you'll need to simulate OWC links include:
    - **Free-Space Optics (FSO)** modules to simulate the transmission over the air.
    - **Laser sources** for optical transmission.

- **Photodetectors** and **optical receivers** to model the reception of optical signals.
- **Channel models** to simulate atmospheric effects, path loss, and noise in OWC systems.

- **Design Considerations**:

  - FBG can be used to **filter the optical signals** or help with dispersion management in a fiber-optic link, but in OWC simulations, you might use it in **combination with other optical components** for system design.
  - You can also simulate the effects of **wavelength selection** or **multiplexing** using FBGs and

Simulation Setup

The setup appears to be a fiber-optic communication system that includes optical signal generation, modulation, transmission through optical fiber, filtering, and detection. It looks like an Optical Pulse Generation and Transmission System with Bragg gratings and filtering techniques for signal processing.

Explanation of Components:

- **Optical Pulse Generators (NRZ & Gaussian):** These generate optical pulses that serve as the input signal.

  - **NRZ (Non-Return-to-Zero)** pulse generator is commonly used in digital communication.
  - **Gaussian pulse generator** shapes the optical pulses to reduce dispersion effects.

- **Electrical Pulse Generator**: Provides electrical signals for modulation.
- **Dual Port Optical Modulator / Mach-Zehnder Modulator (MZM):** Modulates the optical carrier with the input electrical signal.
- Optical Amplifier: Amplifies the optical signal before transmission.
- Optical Fiber Transmission Medium: The optical signal is transmitted through the fiber.
- Fiber Bragg Grating (FBG) components are included for dispersion compensation and wavelength filtering.
- Photodetector (PIN or APD): Converts the received optical signal back into an electrical signal.
- Optical Add-Drop Multiplexer (OADM): Used for wavelength division multiplexing (WDM) systems.
- Optical Power Meter: Measures the optical power at different points in the system.

- Optical Spectrum Analyzer (OSA): Used to visualize and analyze the optical spectrum of the transmitted signal.
- BER (Bit Error Rate) Analyzer: Used for performance analysis of the communication system.

CHAPTER-7

RESULTS AND DISCUSSIONS

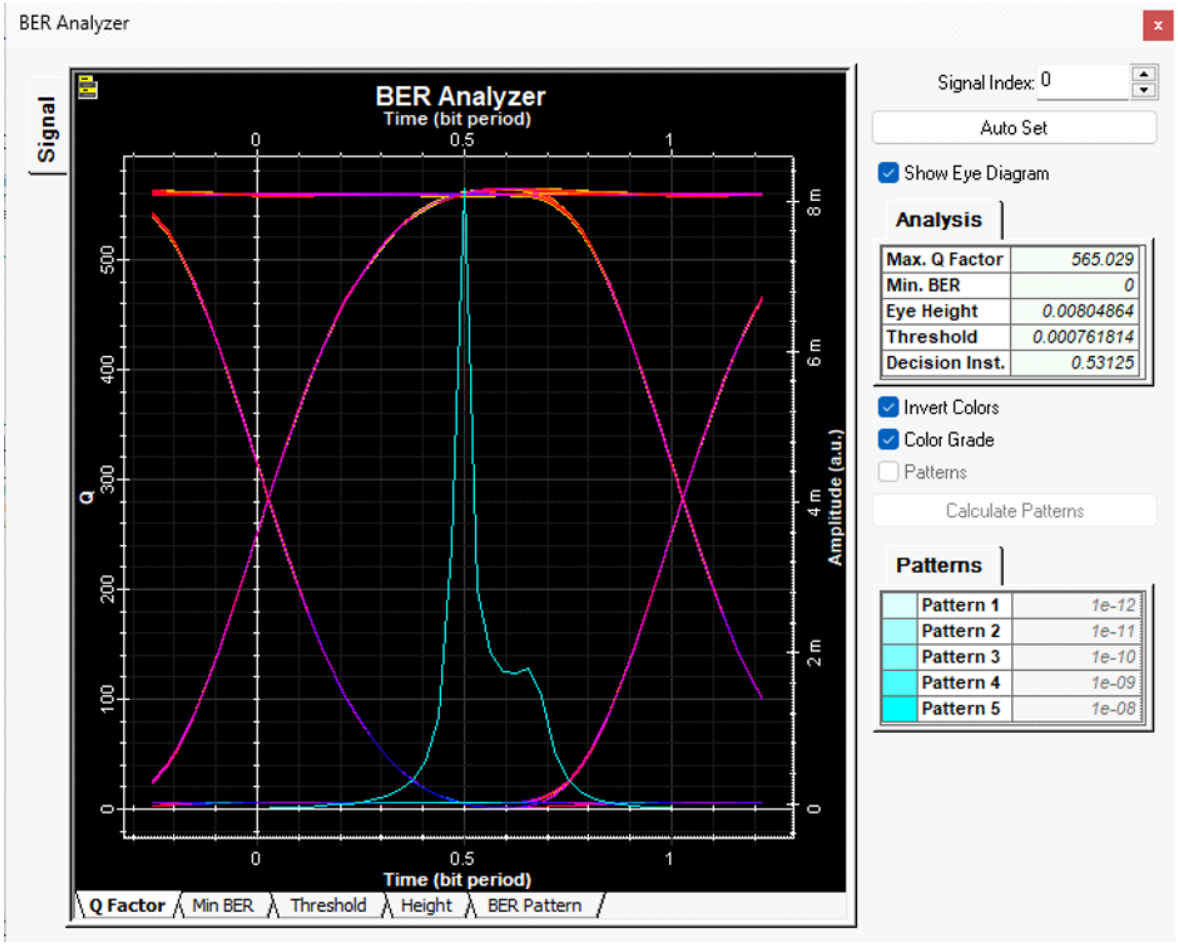

Fig 7.1: Eye Diagram for Transmitter Aperture Diameters in an OWC System

Fig 7.1 shows the eye diagram of transmitter aperture diameter, system with link distance 20 km. This is a BER Analyzer displaying the eye diagram to assess signal quality in digital communication. The maximum Q factor achieved for this configuration is 565.029 and BER of zero.The eye height(0.00804864) shows the noise margin, and a more open eye means better performance.

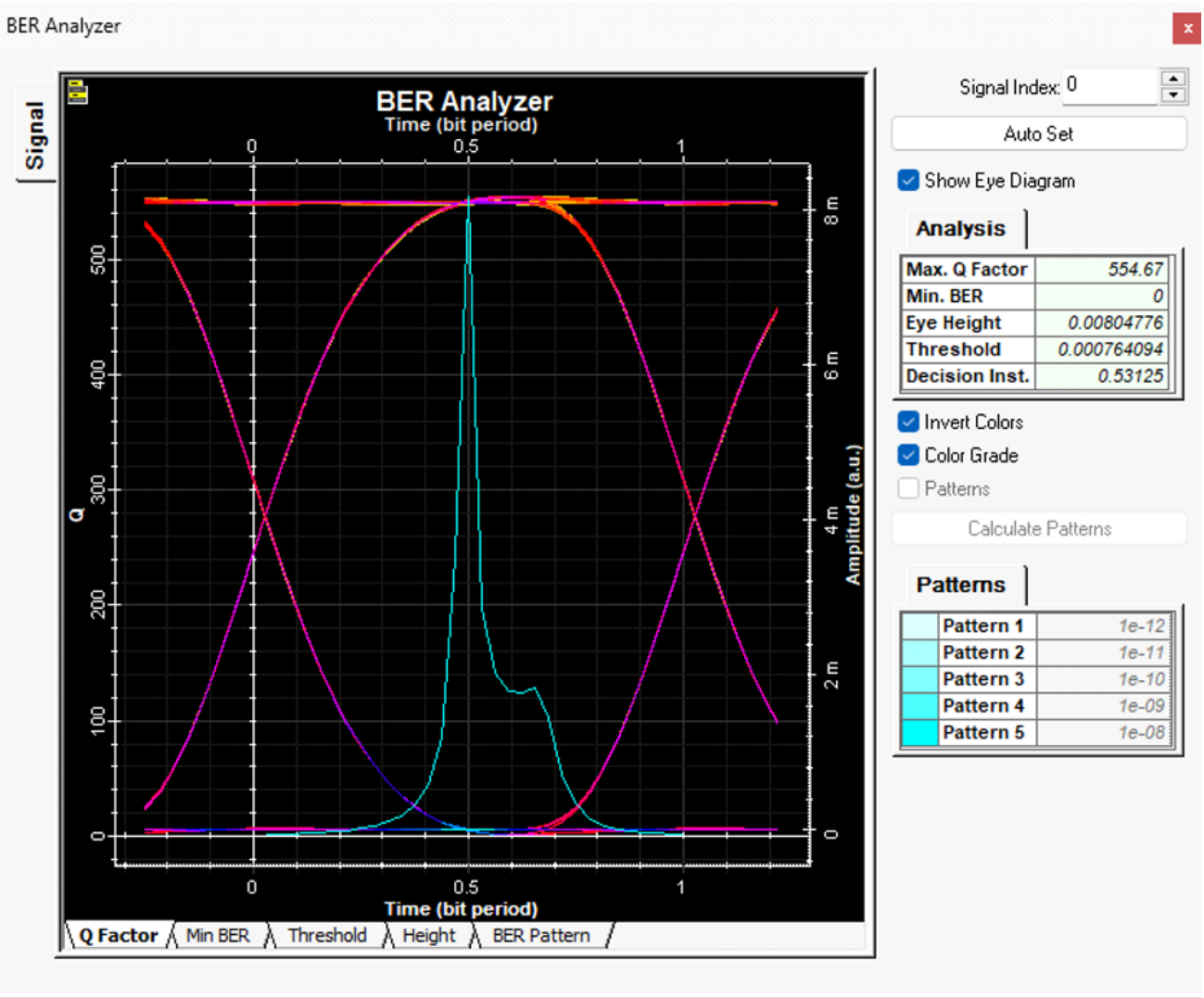

Fig 7.2: Eye Diagram for Receiver Aperture Diameters in an OWC System

Figure 7.2 shows the eye diagram of receiver aperture diameter, system with link distance 20 km. The Bit Error Rate Analyzer evaluates signal quality using eye diagram, where a more open eye indicates better performance. The maximum Q factor achieved for this configuration is 554.67 and BER of zero, meaning no detected errors. Various test patterns analyse BER levels from 1e-12 to 1e-08 to ensure system reliability.

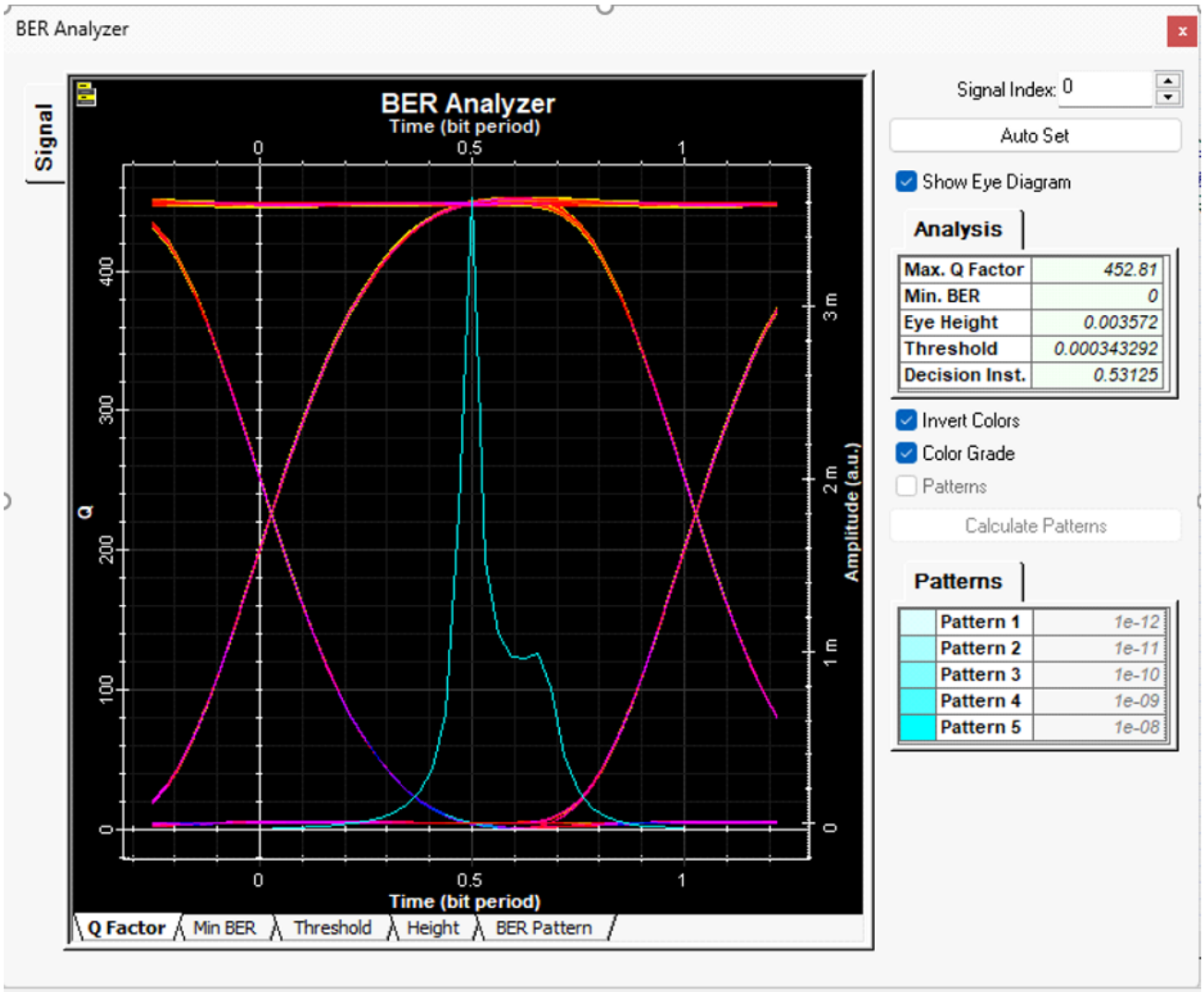

Fig 7.3: Eye Diagram for OWC Channel Ranges in an OWC System

Figure 7.3 shows the eye diagram of OWC channel ranges, system with link distance 20 km. The maximum Q factor achieved for this configuration 452.81 and BER of zero. The eye height (0.003572) represents the noise margin, affecting signal clarity .Different BER patterns (1e-12 to 1e-08) help assess system reliability.

Table 1. Effect of Transmitter Aperture Diameter on Q factor and BER in Optical Wireless Communication

SI.NO	Transmitted aperture diameter(cm)	Max Q factor	Min BER
1	10	356.909	0
2	15	483.908	0
3	20	560.029	0

This Table presents a design analysis of Optical Wireless Communication (OWC) using a Fiber Bragg Grating, examining the relationship between the transmitted aperture diameter and the resulting Quality factor (Q factor) and Bit Error Rate (BER). Increasing the transmitted aperture diameter results in a higher Q factor. Specifically, as the diameter increases from 10 to 20, the Q factor increases from 356.909 to 560.029. In all three cases, the minimum BER is 0, suggesting error-free transmission under these specific conditions. The results suggest that a larger transmitted aperture diameter improves the signal quality in this OWC system, as indicated by the higher Q factor. The consistent zero BER implies that the system is operating efficiently within the tested parameters.

Table 2. Effect of Receiver Aperture Diameter on Q factor and BER in Optical Wireless Communication

SI.NO	Receiver aperture diameter(cm)	Max Q factor	Min BER
1	10	348.761	0
2	15	491.383	0
3	20	554.67	0

This Table presents a design analysis of Optical Wireless Communication (OWC) using a Fiber Bragg Grating, examining the relationship between the receiver aperture diameter and the resulting Quality factor (Q factor) and Bit Error Rate (BER). Increasing the receiver aperture diameter results in a higher Q factor. Specifically, as the diameter increases from 10 to 20, the Q factor increases from 348.761 to 554.61. In all three cases, the minimum BER is 0, suggesting error-free transmission under these specific conditions. The results suggest that a larger receiver aperture diameter improves the signal quality in this OWC system, as indicated by the higher Q factor. The consistent zero BER implies that the system is operating efficiently within the tested parameters.

Table 3. Analysis of Q factor and BER for Different OWC Channel Ranges

SI.NO	Range (Km)	Max Q factor	Min BER
1	500	656.802	0
2	1000	564.132	0
3	1500	452.81	0

This Table presents the relationship between the OWC range(in Kilometers),maximum Q factor, and Minimum Bit Error Rate (BER).Communication System performs best at shorter ranges(500 Km),with a high Q factor indicating a strong clear signal .As the range increases to 1000 Km and 1500 Km, the signal quality decreases ,but the system maintains error-free transmission .

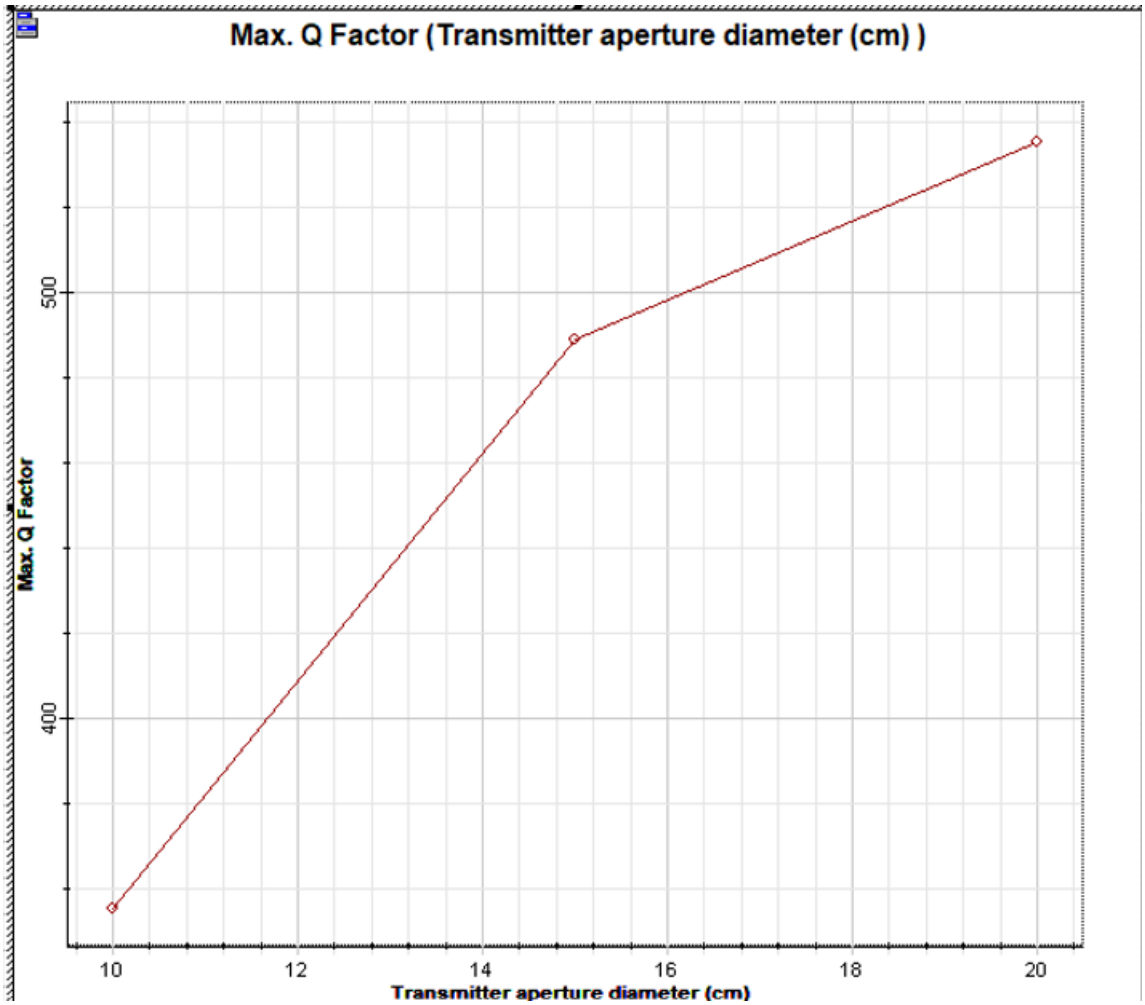

Fig 7.4: Maximum Q factor vs. Transmitter Aperture Diameter

The above graph shows the relationship between the transmitter aperture diameter (in cm) and the maximum achievable Q factor. The Q factor, indicating signal quality, increases as the aperture diameter increases.This relationship is generally linear within the measured range. Large transmitter apertures enable higher quality signal transmission.

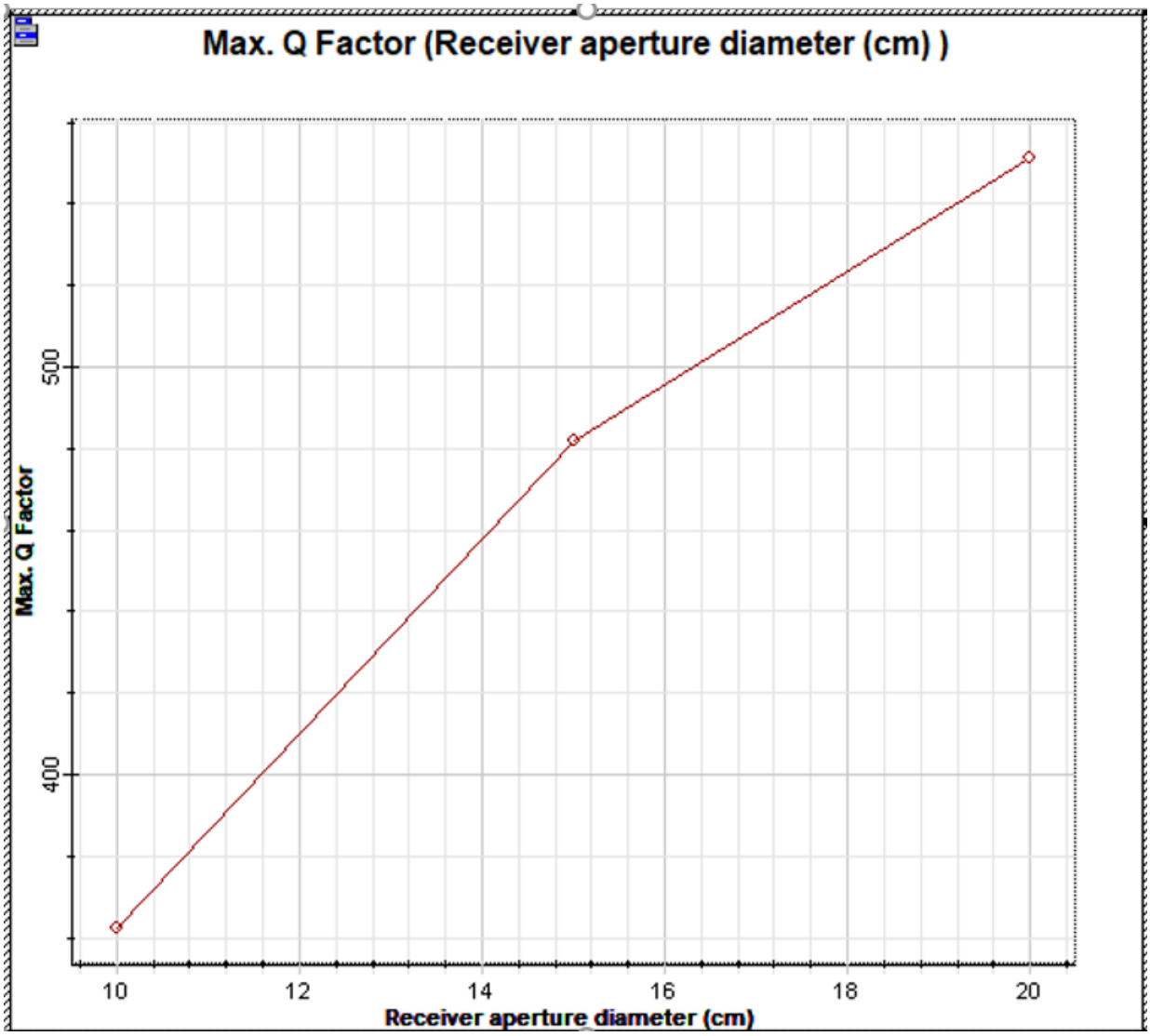

Fig 7.5: Maximum Q factor vs. Receiver Aperture Diameter

The above graph shows the relationship between the receiver aperture diameter(in cm) and the maximum achievable Q factor .The Q factor, indicating signal quality,increases as the aperture diameter increases.This relationship is generally linear within the measured range.Large receiver apertures enable higher quality signal transmission.

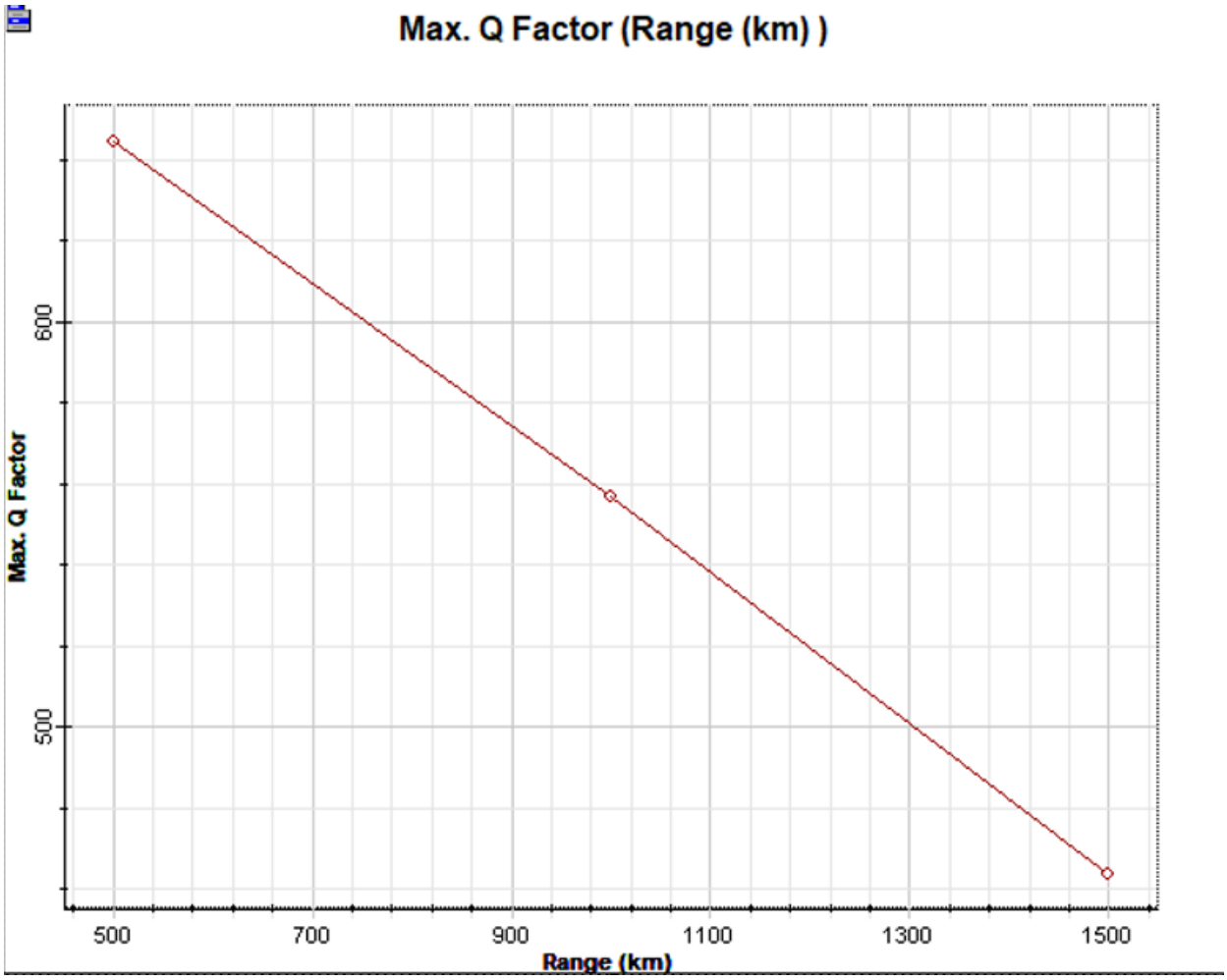

Fig 7.6 Maximum Q factor vs. OWC Channel Range

The above graph represents the relationship between the OWC range and maximum achievable Q factor. The graph illustrates a clear negative correlation: as the range increases, the Max. Q Factor decreases. This suggests that over greater distances, the quality factor diminishes, implying a potential loss in signal strength or efficiency. The data points and the trend line visually reinforce this inverse relationship, showing a consistent decline in Q factor as the range extends. Essentially, the graph conveys that the quality of whatever is being measured degrades with increasing distance.

CHAPTER 8
ADVANTAGES

- **Efficient Wavelength Filtering**: Fiber Bragg Gratings (FBGs) are excellent wavelength-selective filters, reflecting specific wavelengths while allowing others to pass. This enhances signal purity, reducing interference and improving overall transmission efficiency in OWC systems.

- **Dispersion Compensation**: One of the major challenges in high-speed optical communication is chromatic dispersion, which causes signal distortion. FBGs can be used as dispersion compensators, correcting signal broadening effects and ensuring high-quality data transmission over long distances.

- **Supports Wavelength Division Multiplexing (WDM)**: FBGs enable Wavelength Division Multiplexing (WDM) by allowing multiple signals at different wavelengths to be transmitted simultaneously. This increases data capacity and improves spectral efficiency in OWC systems, making them ideal for high-speed communication applications.

- **Passive and Energy-Efficient Operation:** FBGs do not require an external power source, as they function based on their intrinsic optical properties. This makes them highly energy-efficient, reducing power consumption in OWC networks and ensuring sustainable operation.

- **Compact and Lightweight Design:** FBGs are small and lightweight, making them easy to integrate into various optical wireless systems. Their compact nature allows for flexible deployment in space-constrained environments.

- **Temperature and Strain Sensing Capabilities**: FBGs can also serve as sensors, monitoring temperature and strain variations in real-time. This feature is particularly beneficial in OWC.

- **Enhanced Security in Optical Wireless Communication**: The selective reflection property of FBGs helps improve security in OWC networks by filtering out unwanted wavelengths and reducing the chances of eavesdropping or signal interception.

LIMITATIONS

- **Limited Bandwidth**: FBGs are designed to reflect only specific wavelengths, which can restrict the operational bandwidth of the OWC system. This makes it less flexible for applications requiring broad-spectrum transmission.

- **High Sensitivity to Temperature Variations**: The reflection wavelength of an FBG shifts with temperature changes. In OWC systems, where environmental conditions fluctuate, this sensitivity can lead to signal instability.

- **Complex Fabrication Process**: Manufacturing FBGs requires precise control over parameters such as grating period and refractive index modulation. This increases production costs and complexity, making mass production more challenging.

- **Difficulty in Dynamic Tuning:** Although FBGs can be tuned by applying strain or temperature changes, dynamic tuning is relatively slow and requires additional control mechanisms.

- **Integration Challenges:** Aligning FBGs with free-space optical (FSO) links in OWC systems can be complex. Precise positioning and calibration are required to ensure proper filtering and signal processing, increasing system design complexity.

- **Limited Dynamic Range:** FBGs have a fixed reflection wavelength and a narrow bandwidth, which makes them unsuitable for applications that require wide-spectrum adaptability or rapid wavelength switching.

- **Additional Cost for Compensation Techniques:** To address temperature sensitivity and dispersion, additional components such as thermal stabilization units or tunable filters may be needed, increasing the overall system cost.

- **Fragility and Handling Issues:** FBGs are delicate components embedded in optical fibers. They can be prone to mechanical damage or degradation over time, requiring careful handling and protection in harsh environments.

CHAPTER-9
APPLICATIONS

- **High-Speed Free-Space Optical (FSO) Communication**: FBGs enhance signal filtering and dispersion compensation, improving data transmission in FSO links. Used in satellite-to-ground and inter-satellite communication for high-speed optical data transfer.

- **Underwater Optical Wireless Communication**: FBGs help mitigate dispersion and signal degradation in underwater environments. Used in submarine communication, underwater sensor networks, and ocean exploration.

- **5G and Beyond Wireless Networks:** Supports high-speed optical fronthaul and backhaul links in 5G networks.

- **Smart Cities and Intelligent Transport Systems (ITS):** Used in Li-Fi (Light Fidelity) communication for high-speed data transmission in smart infrastructure. Supports optical-based vehicle-to-vehicle (V2V) and vehicle-to-infrastructure (V2I) communication.

- **Aerospace and Defense Communication:** FBG-enhanced OWC systems are used for secure, high-speed data transmission in military applications.Supports UAV (Unmanned Aerial Vehicle) communication and battlefield optical links.

- **Medical and Biomedical Applications:** Enables wireless optical communication in medical imaging and endoscopic procedures.FBG-based sensors assist in real-time patient monitoring and biomedical signal transmission.

- I**ndustrial Automation and IoT Networks:** Used in wireless optical links for industrial sensor communication.Enhances data security and reliability in factory automation and remote monitoring.

- D**isaster Management and Emergency Communication:** Provides rapid-deployable optical wireless links in disaster-struck areas where conventional networks fail.

CHAPTER-10

CONCLUSIONS

The design of Optical Wireless Communication (OWC) using Fiber Bragg Grating (FBG) offers several advantages, particularly in enhancing system performance. FBG effectively compensates for chromatic dispersion, reducing inter-symbol interference (ISI) and improving the bit error rate (BER), which is crucial for maintaining signal integrity over longer distances. It also acts as a narrowband optical filter, enabling efficient wavelength selection and improving spectral efficiency. The passive nature of FBG makes it a low-power solution compared to electronic dispersion compensation techniques. Additionally, its compact and cost-effective design makes it a practical choice for real-world applications. In challenging environments like Bengaluru's rainy conditions, FBG-based OWC systems can mitigate atmospheric attenuation effects, ensuring reliable communication. Overall, integrating FBG in OWC enhances signal quality, improves transmission efficiency, and makes the system more robust for diverse environmental conditions.

FUTURE SCOPE

- **Integration with 5G and 6G Networks**: Enhancing high-speed wireless communication and seamless fiber-optic backhaul connectivity.
- **AI and Machine Learning-Based Optimization**: Using intelligent algorithms to adaptively filter and compensate for channel impairments.
- **Advancements in Free-Space Optical (FSO) Communication**: Improving performance in atmospheric turbulence for terrestrial and space-based optical links.
- **Satellite and Deep-Space Communication**: Enhancing inter-satellite optical links and space exploration communication systems.
- **Tunable and Reconfigurable FBGs**: Developing dynamically adjustable gratings for adaptive signal processing in changing environments.
- **Integration with Li-Fi and Visible Light Communication (VLC)**: Enabling high-speed, energy-efficient communication for smart cities and IoT applications.

Publication of paper in IEEE Xplore

Modified Duobinary RZ Modulation OWC for Bengaluru Weather Conditions

Arpita S. Bhat; G A Hansika; D R Monisha; Vijayashri V. Belgaonkar; V. G. Supriya; Shweta Madiwalar

2024 8th International Conference on Computational System and Information Technology for Sustainable Solutions (CSITSS)

Year: 2024 | Conference Paper | Publisher: IEEE

Abstract HTML

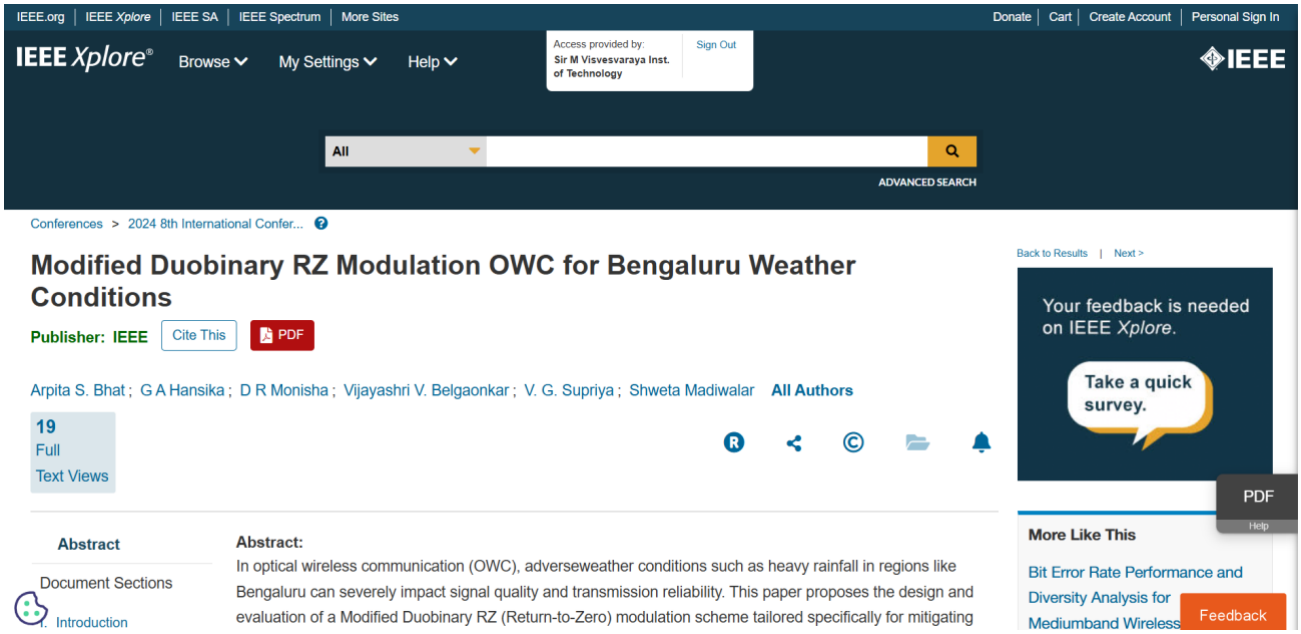

REFERENCES

[1] F. Paloi, T. Mirza, and S. Haxha, "Optimisation of dispersion compensating in a long-haul fibre for RF transmission of up to 100 Gbit / s by using RZ and NRZ formats," Opt. - Int. J. Light Electron Opt., vol. 131, pp. 640–654, 2017.

[2] K. Nyachionjeka and W. Makondo, "Effects of Modulation Techniques (Manchester Code, NRZ or RZ) on the Operation of Hybrid WDM / TDM Passive Optical Networks," Int. Sch. Res. Not., vol. 2014, pp. 1–8, 2014.

[3] L. Li, J. Zhang, D. Duan, and A. Yin, "Analysis modulation formats of DQPSK in WDM-PON system," Optik (Stuttg)., vol. 123, no. 22, pp. 2050–2055, 2012,.

[4] V. Arya, M. Kumari, N. Sharma, and P. Singh, "Investigation of VLLC-OCDM System for Intelligent Transport Applications," in 2023 3rd Asian Conference on Innovation in Technology (ASIANCON), 2023, pp. 1–4.

[5] D. T. Van Veen and V. E. Houtsma, "Proposals for Cost-Effectively Upgrading Passive Optical Networks to a 25G Line Rate," J. Light. Technol., vol. 35, no. 6, pp. 1180–1187, 2017.

[6] G. Soni, "Performance Investigation of OTDM Link at 10*4 Gbps and Link Range of 348 km Using NRZ and RZ Schemes," J. Opt. Commun., vol. 0, no. 0, 2017.

[7] V. Kachhatiya and S. Prince, "Downstream performance analysis and optimization of the next generation passive optical network stage 2 (NG-PON2)," Opt. Laser Technol., vol. 104, pp. 90–102, 2018.

[8] M. Kumari, R. Sharma, and A. Sheetal, "Performance analysis of high speed backward compatible TWDM-PON with hybrid WDM– OCDMA PON using different OCDMA codes," Opt. Quantum Electron., vol. 52, no. 11, pp. 1–59, 2020.

[9] N. Alsowaidi, T. Eltaif, and M. R. Mokhtar, "Performance Comparison of Different Modulation Formats for a 40 Gbps Hybrid Optical CDMA/DWDM System against ISI and FWM," Photonics, vol. 9, no. 8, p. 555, 2022.

[10] M. Kumari and V. Arya, "A smooth evolution of wavelength complement coding integrated MDM/coherent NGPON incorporating probabilistically shaped-512 QAM," Opt. Quantum Electron., vol. 56, no. 1, p. 82, 2024.