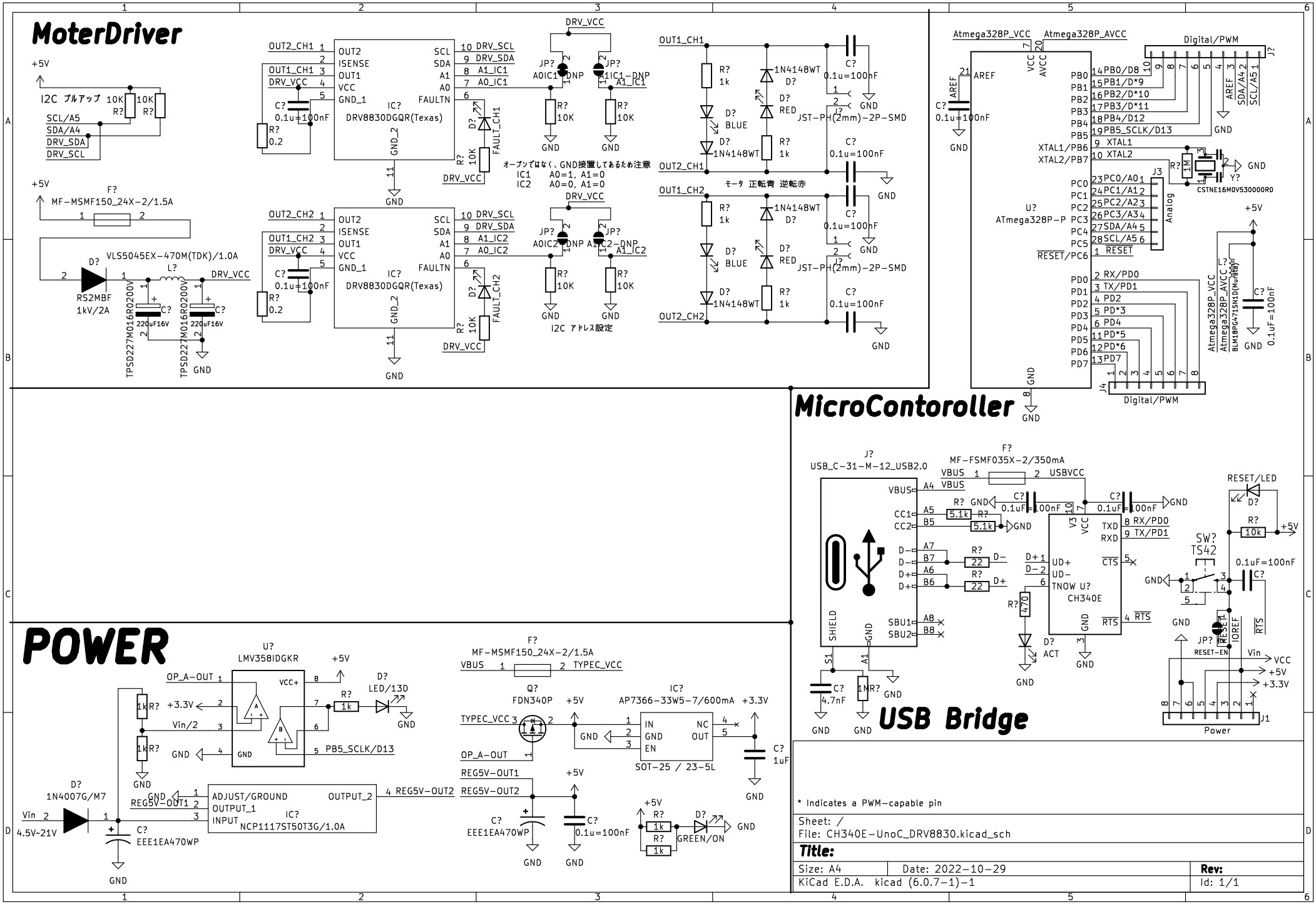
MoterDriver
+5V
I2C プルアップ 10K 10K
R? R?
SCL/A5
SDA/A4
DRV_SDA
DRV_SCL
F?
MF-MSMF150_24X-2/1.5A
VLS5045EX-470M(TDK)/1.0A
L?
D?
RS2MBF
1kV/2A
DRV_VCC
C?
220uF16V
TPSD227M016R0200V
GND
OUT2_CH1
OUT1_CH1
DRV_VCC
C?
0.1u=100nF
R?
0.2
IC?
DRV8830DGQR(Texas)
OUT2
ISENSE
OUT1
VCC
GND_1
GND_2
SCL
SDA
A1
A0
FAULTN
DRV_SCL
DRV_SDA
A1_IC1
A0_IC1
FAULT_CH1
R?
10K
JP?
A0IC1-DNP
A1IC1-DNP
オープンではなく、GND接続してあるため注意
IC1 A0=1, A1=0
IC2 A0=0, A1=0
OUT2_CH2
OUT1_CH2
A1_IC2
A0_IC2
FAULT_CH2
A0IC2-DNP
A1IC2-DNP
I2C アドレス設定
OUT1_CH1
OUT2_CH1
OUT1_CH2
OUT2_CH2
R? 1k
D? BLUE
D? RED
1N4148WT
D?
C? 0.1u=100nF
J? JST-PH(2mm)-2P-SMD
モータ 正転青 逆転赤
MicroContoroller
Atmega328P_VCC
Atmega328P_AVCC
Digital/PWM
AREF
C? 0.1u=100nF
PB0/D8
PB1/D*9
PB2/D*10
PB3/D*11
PB4/D12
PB5_SCLK/D13
XTAL1/PB6
XTAL2/PB7
XTAL1
XTAL2
R? 1M
Y?
CSTNE16M0V530000R0
J3
Analog
U?
ATmega328P-P
PC0/A0
PC1/A1
PC2/A2
PC3/A3
PC4/SDA/A4
PC5/SCL/A5
RESET/PC6
RESET
PD0 RX/PD0
PD1 TX/PD1
PD2 PD2
PD3 PD*3
PD4 PD4
PD5 PD*5
PD6 PD*6
PD7 PD7
J4
Atmega328P_VCC
Atmega328P_AVCC
BLM18PG471SN1D(Murata)
L?
C? 0.1uF=100nF
USB Bridge
J?
USB_C-31-M-12_USB2.0
VBUS
CC1
CC2
D-
D+
SHIELD
GND
SBU1
SBU2
S1
A1
C? 4.7nF
R? 1M
F?
MF-FSMF035X-2/350mA
USBVCC
R? 5.1k
R? 22
R? 470
D? ACT
TNOW U?
CH340E
UD+
UD-
V3
VCC
TXD
RXD
RX/PD0
TX/PD1
CTS
RTS
RESET/LED
R? 10k
+5V
SW?
TS42
0.1uF=100nF
JP?
RESET-EN
IOREF
Vin
VCC
+3.3V
J1
Power
U?
LMV358IDGKR
OP_A-OUT
+3.3V
Vin/2
PB5_SCLK/D13
R? 1k
D? LED/13D
D?
1N4007G/M7
4.5V-21V
C? EEE1EA470WP
ADJUST/GROUND
OUTPUT_1
INPUT
OUTPUT_2
IC?
NCP1117ST50T3G/1.0A
REG5V-OUT1
REG5V-OUT2
F?
MF-MSMF150_24X-2/1.5A
TYPEC_VCC
Q?
FDN340P
IC?
AP7366-33W5-7/600mA
IN
GND
EN
NC
OUT
SOT-25 / 23-5L
C? 1uF
C? 0.1u=100nF
R? 1k
D? GREEN/ON
* Indicates a PWM-capable pin
Sheet: /
File: CH340E-UnoC_DRV8830.kicad_sch
Title:
Size: A4
Date: 2022-10-29
Rev:
KiCad E.D.A. kicad (6.0.7-1)-1
Id: 1/1