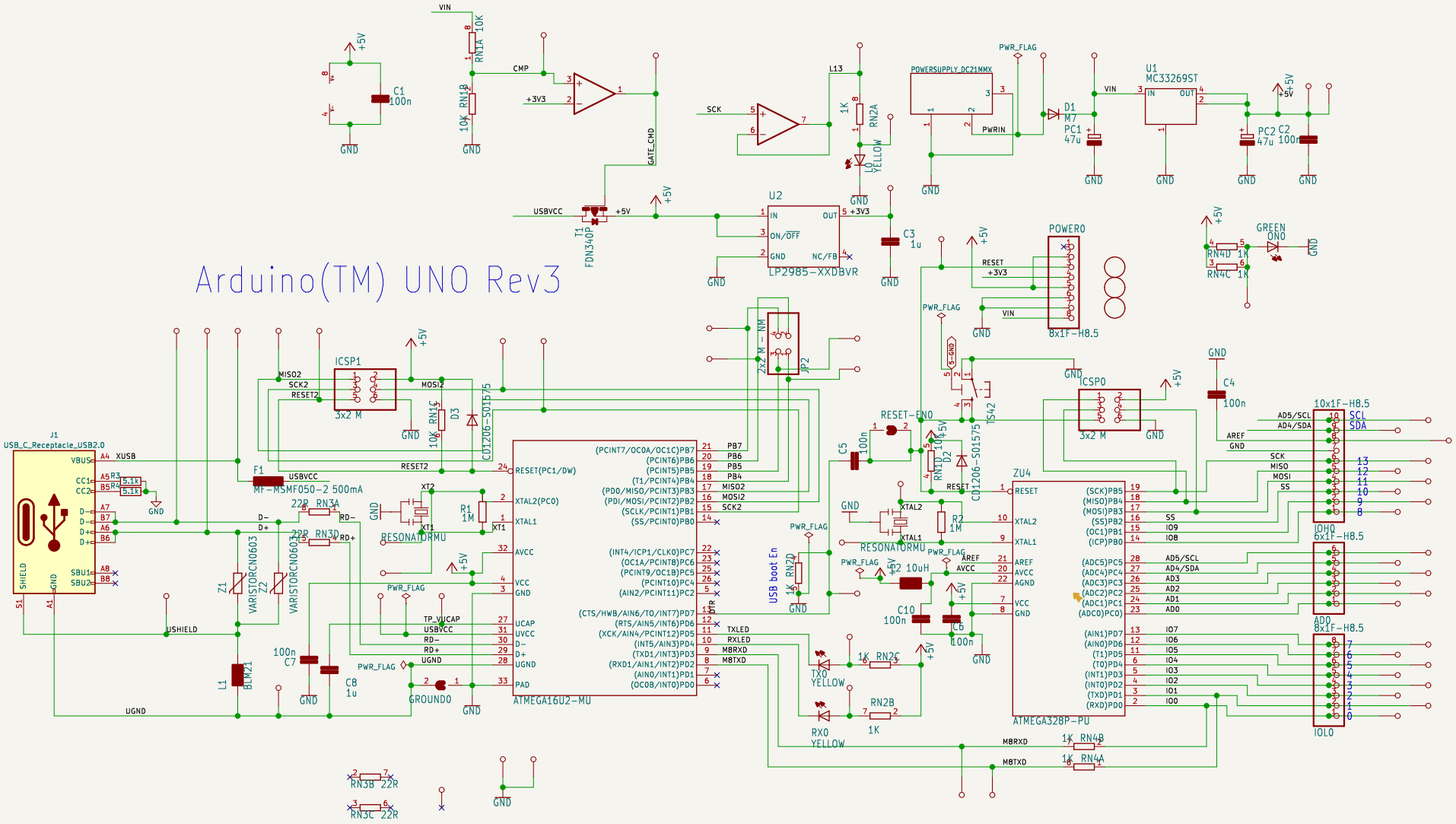
Arduino(TM) UNO Rev3
J1
USB_C_Receptacle_USB2.0
ICSP1
3x2 M
ICSP0
3x2 M
U2
LP2985-XXDBVR
U1
MC33269ST
POWERSUPPLY_DC21MMX
POWER0
8x1F-H8.5
10x1F-H8.5
IOHO
6x1F-H8.5
AD0
8x1F-H8.5
IOLO
ZU4
ATMEGA328P-PU
ATMEGA16U2-MU
F1
MF-MSMF050-2 500mA
T1
FDN340P
JP2
2x2 M - NM
RESONATORMU
GROUNDO
GREEN
ON0
TX0
YELLOW
RX0
YELLOW
L0
YELLOW
USB boot En
RESET-FN0
TS42
CD1206-S01575
VARISTORCN0603
BLM21
L13
L2 10uH
VIN
+5V
GND
USHIELD
UGND
MBRXD
MBTXD
RXLED
TXLED
SCK
CMP
GATE_CMD
USBVCC
PWR_FLAG
RESET
+3V3
AREF
AVCC
SCL
SDA
SS
IO9
IO8
IO7
IO6
IO5
IO4
IO3
IO2
IO1
IO0
AD5/SCL
AD4/SDA
AD3
AD2
AD1
AD0
RN3B 22R
RN3C 22R