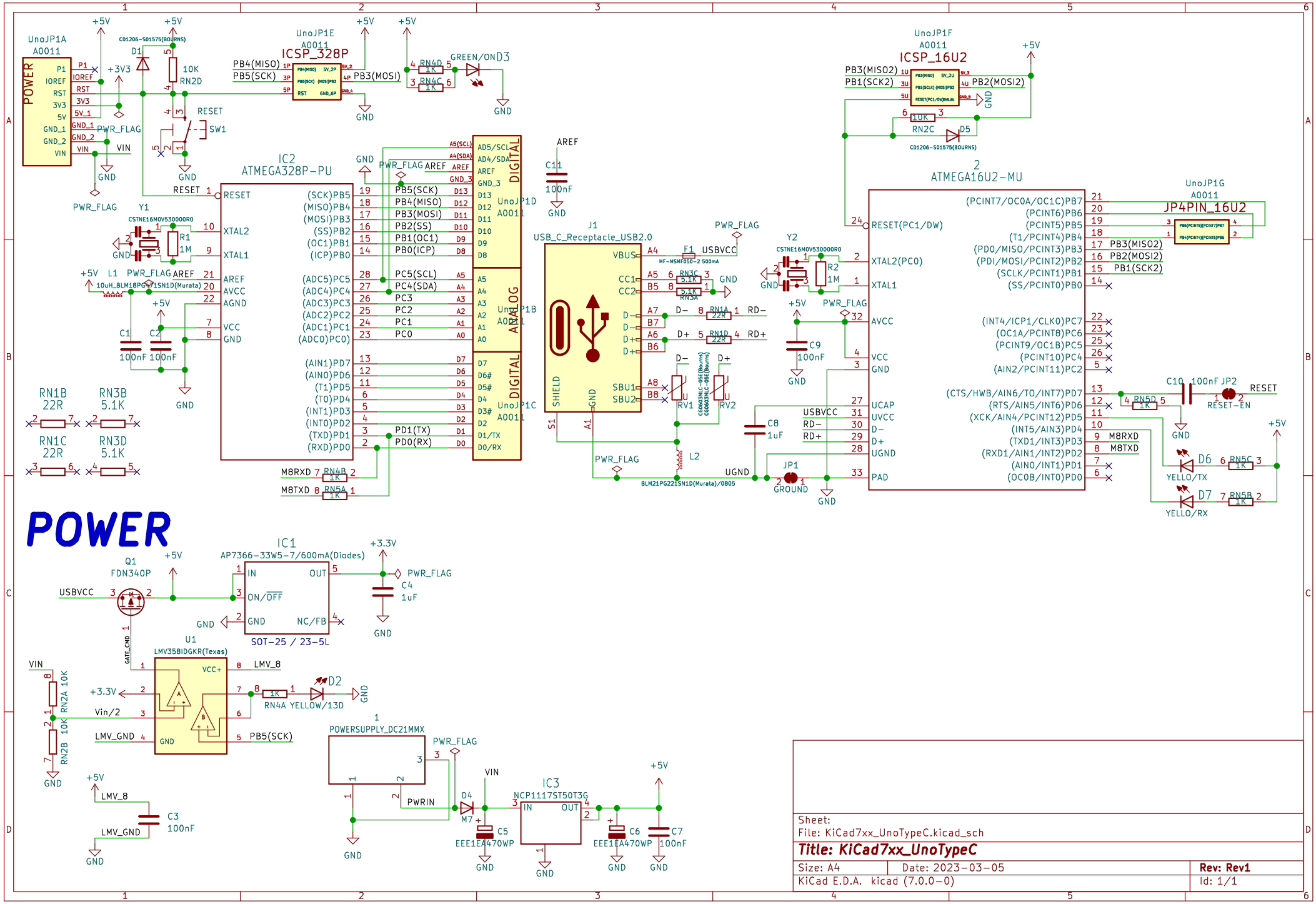
UnoJP1A
A0011
POWER
IC2
ATMEGA328P-PU
UnoJP1E
A0011
ICSP_328P
UnoJP1D
A0011
DIGITAL
UnoJP1B
A0011
ANALOG
UnoJP1C
A0011
DIGITAL
UnoJP1F
A0011
ICSP_16U2
2
ATMEGA16U2-MU
UnoJP1G
A0011
JP4PIN_16U2
J1
USB_C_Receptacle_USB2.0
POWER
IC1
AP7366-33W5-7/600mA(Diodes)
SOT-25 / 23-5L
Q1
FDN340P
U1
LMV358IDGKR(Texas)
IC3
NCP1117ST50T3G
POWERSUPPLY_DC21MMX
Sheet:
File: KiCad7xx_UnoTypeC.kicad_sch
Title: KiCad7xx_UnoTypeC
Size: A4
Date: 2023-03-05
Rev: Rev1
KiCad E.D.A. kicad (7.0.0-0)
Id: 1/1