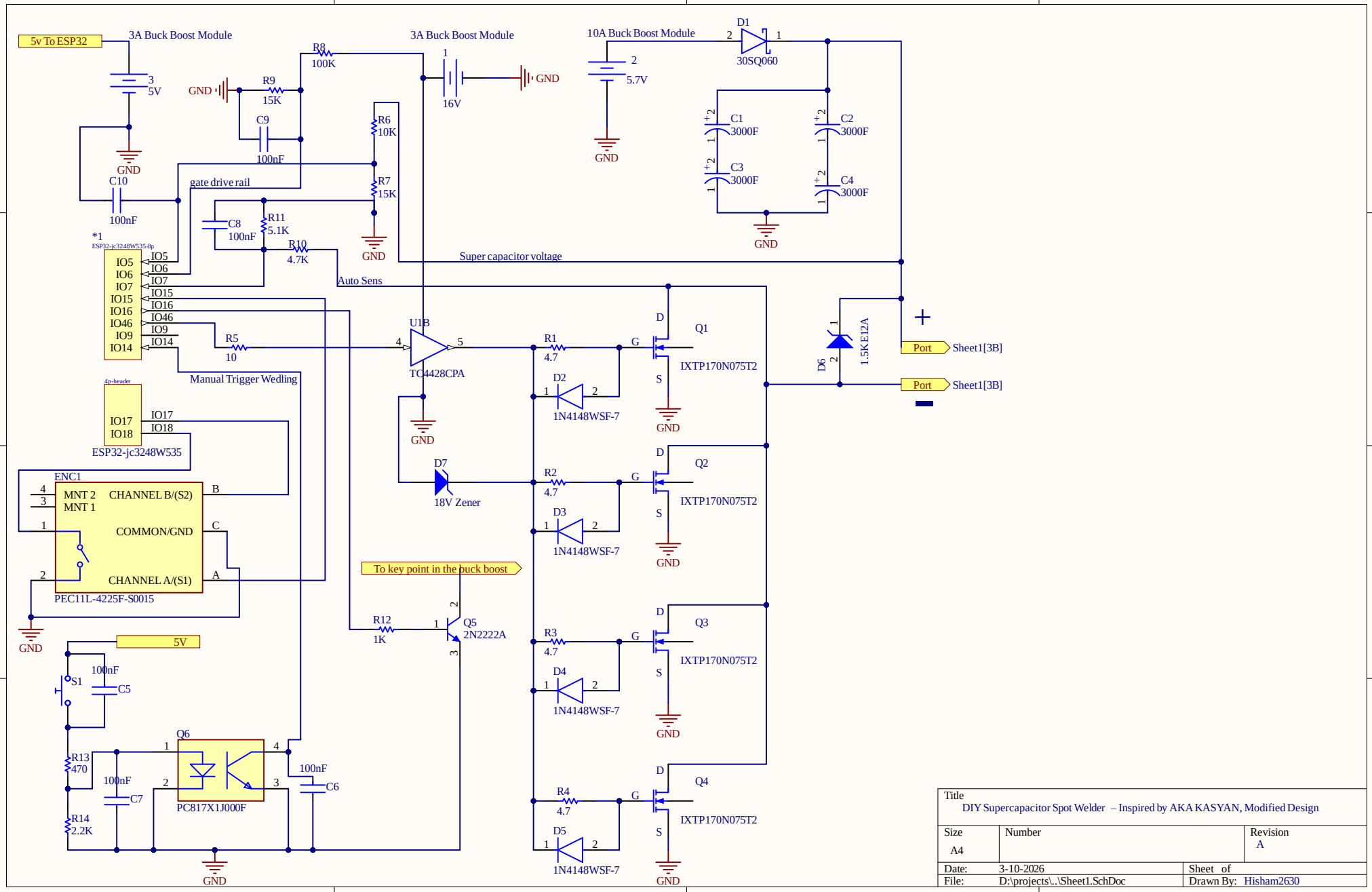

Title	DIY Supercapacitor Spot Welder – Inspired by AKA KASYAN, Modified Design	
Size A4	Number	Revision A
Date: 3-10-2026		Sheet of
File: D:\projects\..\Sheet1.SchDoc		Drawn By: Hisham2630

Comment	Description	Designator	Footprint	LibRef	Quantity