e-con Systems India Pvt Ltd

Web: www.e-consystems.com

Email: camerasolutions@e-consystems.com

RouteCAM_P_CU25_CXLC_IP67

Datasheet

Revision 1.2

03rd July, 2024

Contents

1 Introduction 3
2 Disclaimer 3
3 Description 4
3.1 Features 5
4 Key Specifications 6
4.1 CMOS Image Sensor Specification 6
4.2 Maximum Frame Rates Supported by RouteCAM_P_CU25_CXLC_IP67 6
5 Connector Details 6
5.1 Pin-out Details of M12 Connector 7
5.2 Pin-out Details of M8 Connector 8
6 Electrical Specification 9
6.1 Recommended Operating Condition 9
6.1.1 Power Consumption of RouteCAM_P_CU25_CXLC_IP67 9
6.2 Operating Temperature Range 10
7 Mechanical Specifications 10
7.1 RouteCAM_P_CU25_CXLC_IP67 Dimensions 10
Revision History 12
Support 13

1 Introduction

RouteCAM_P_CU25_CXLC_IP67 is a 2MP, Power over Ethernet (PoE) IP67-rated camera in the RouteCAM ethernet series cameras from econ Systems, a company with over two decades of experience in designing, developing, and manufacturing OEM cameras. This global shutter camera is based on onsemi™ AR0234, 1/2.6" CMOS 3.0µm image sensor with an active-pixel array of 1920 (H) x 1200(V). It comes with a standard M12 X-Coded connector. The built-in Ethernet transceiver of this camera supports 10Base-T, 100Base-TX, and 1000Base-T modes, allowing for flexible network connectivity. The camera can stream compressed 1080p video at a maximum of 60 fps.

The 2MP camera's PoE adheres to IEEE 802.3af compliance and includes Precision Time Protocol (PTP) synchronization support. Its in-built ISP helps in adapting to different lighting conditions by adjusting the exposure time (auto exposure) and reproducing the true color of the scene (auto white balance), making this camera suitable for low-light applications. It is also featured with an external trigger support, making it suitable for applications requiring synchronization of multiple cameras.

The 2MP camera's PoE adheres to IEEE 802.3af compliance and includes Precision Time Protocol (PTP) synchronization support. Its in-built ISP helps in adapting to different lighting conditions by adjusting the exposure time (auto exposure) and reproducing the true color of the scene (auto white balance), making this camera suitable for low-light applications. It is also featured with an external trigger support, making it suitable for applications requiring synchronization of multiple cameras.

The PoE camera ensures compliance with IEEE 802.3af standards and offers support for cable lengths of up to 100m. This camera is provided along with the 3-metre M12 to RJ45 cables. These long, flexible, and easily available M12 to RJ45 cables make the camera suitable for mechanically challenging designs of new-generation embedded, automotive, and autonomous driving, surveillance, and machine vision applications.

e-con Systems provides the sample applications that demonstrate the features of this camera for both Windows and Linux operating systems. Any Open Network Video Interface Forum (ONVIF) application can also make use of this camera.

This document describes the features of the RouteCAM_P_CU25_CXLC_IP67 board including the mechanical diagram.

2 Disclaimer

The specifications and features of RouteCAM_P_CU25_CXLC_IP67 camera board are provided here as reference only and e-con Systems reserves the right to edit/modify this document without any prior intimation of whatsoever.

3 Description

RouteCAM_P_CU25_CXLC_IP67 camera consists of a 1/2.6" AR0234 image sensor from onsemi™, internal image signal processor (ISP), internal ethernet transceiver supporting 10Base-T, 100Base-TX & 1000base-T modes, M8 8pin connector for power & IO signal and M12 8pin connector for PoE connection.

The top and bottom views of the RouteCAM_P_CU25_CXLC_IP67 camera module are shown in the below figures.

Figure 1: Top View of RouteCAM_P_CU25_CXLC_IP67 Camera Module

Figure 2: Bottom View of RouteCAM_P_CU25_CXLC_IP67 Camera Module

PoE is the technology that passes the electric power and the data over a twisted-pair data cable to a Powered Device (PD) module. The RouteCAM_P_CU25_CXLC_IP67 camera can be powered using PoE switches or injectors that comply with IEEE 802.3af standards. The camera is available with an S mount (M12) lens holder allowing customers to choose the lens as per their requirements.

RouteCAM_P_CU25_CXLC_IP67 product is fully IP67 rated only when the M12 cable is connected. The torque value to apply on the M12 cable nut is 30CN.

The RouteCAM_P_CU25_CXLC_IP67 part numbers are listed in the below table.

Part Number	Description
RouteCAM_P_CU25_CXLC_IP67_H01R2	IP67 rated 2MP Ethernet camera with around 140deg DFOV optical lens, 3m M12 to RJ45 cable, power cord and POE Injector
RouteCAM_P_CU25_CXLC_IP67_H02R1	IP67-rated 2MP Ethernet camera with around 140deg DFOV optical lens and 3m M12 to RJ45 cable without power cord and POE Injector

Table 1: Product Part Numbers of RouteCAM_P_CU25_CXLC_IP67

Note: The default variant of RouteCAM_P_CU25_CXLC_IP67 is given above. For any customization requirements, kindly reach out to us by visiting https://www.e-consystems.com/contactus.asp.

3.1 Features

The features of RouteCAM_P_CU25_CXLC_IP67 are as follows:

- IP67 rated 2MP PoE camera with 1/2.6" optical form factor
- IEEE 802.3af compliance with PTP synchronization support
- Supports 10Base-T, 100Base-TX and 1000base-T modes
- Unique Mac address for each camera
- Basic ONVIF compliance
- Shielded Cat6 M12 to RJ45 cable for transmission of both power and data for long distance
- Compressed MJPEG, HEVC, and H.264 formats
- Imaging/video applications:
  - FHD (1920 x 1080) at 30 & 60 fps
  - HD (1280 x 720) at 30 & 60 fps
  - VGA (640 x 480) at 30 & 60 fps
  - QVGA (320 x 240) at 30 & 60 fps
- Standard M12 metal lens holder for use with customized optics or lenses for various applications.
- Light weight, versatile, and portable design
- Operating Temperature: -30°C to 70°C
- Typical Power consumption: 3.08W
- Restriction of Hazardous Substances (RoHS) compliant

4 Key Specifications

The key specifications of RouteCAM_P_CU25_CXLC_IP67 are listed in the below table.

Description	Specification
Size (L x W x H)	46mm x 46mm x 52.95mm (without Lens)
Video Format	MJPEG, HEVC, H.264
Image Resolution	320 x 240 (QVGA) 640 x 480 (VGA) 1280 x 720 (HD) 1920 x 1080 (FHD)
Supported OS	Windows and Linux

Table 2: Key Specifications of RouteCAM_P_CU25_CXLC_IP67

4.1 CMOS Image Sensor Specification

The specifications of the CMOS image sensor used in the RouteCAM_P_CU25_CXLC_IP67 board are listed in the below table.

Sensor Specification	
Type / Optical Size	1/2.6" Optical format CMOS image sensor
Resolution	2MP
Pixel Size	3.0 µm(H) x 3.0 µm(V)
Sensor Active Area	1920H x 1200V

Table 3: CMOS Image Sensor Specification

For more information about the AR0234 sensor, please contact onsemi™.

4.2 Maximum Frame Rates Supported by RouteCAM_P_CU25_CXLC_IP67

The supported maximum frame rate is listed in the below table.

Resolution	Frame Rate (Compressed UYVY)
QVGA (320 x 240)	30 & 60 fps
VGA (640 x 480)	30 & 60 fps
HD (1280 x 720)	30 & 60 fps
FHD (1920 x 1080)	30 & 60 fps

Table 4: Supported Resolution and Frame Rate

5 Connector Details

The pin details of RouteCAM_P_CU25_CXLC_IP67 product connectors are described in the below sections.

- Pin-out Details of M12 Connector
- Pin-out Details of M8 Connector

RouteCAM_P_CU25_CXLC_IP67 has two connectors, one is 8-position X-Coded Female M12 connector and another one is 8-position A-Coded Female M8 connector. Also, two LED indications are provided to indicate the mode of data transfer (10Base-T, 100Base-TX, and 1000base-T modes).

Since we are not providing M8 cable, the M8 connector is closed with a steel cap to maintain the IP67 rate. Standard A coded Male M8 cable can used after removing the cap.

The connectors and LED location of RouteCAM_P_CU25_CXLC_IP67 are shown in the below figure.

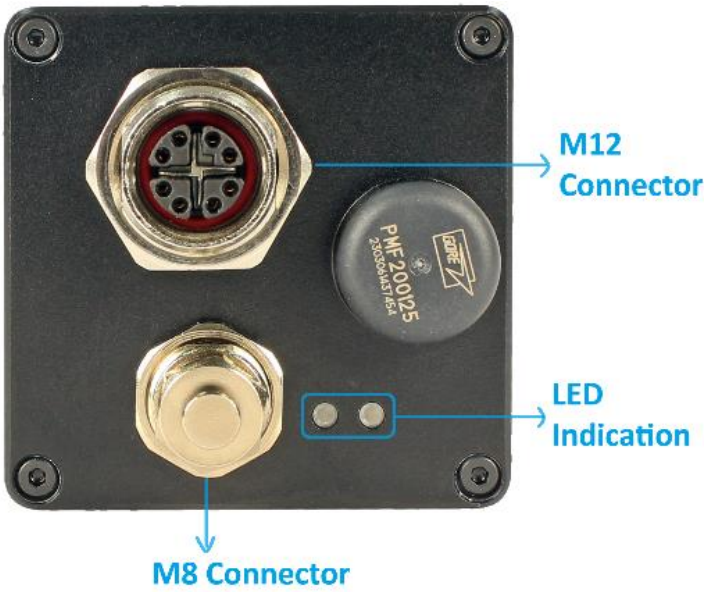

Figure 3: Connectors and LED Location

5.1 Pin-out Details of M12 Connector

This connector is used for interfacing the M12 Ethernet cable to the RouteCAM_P_CU25_CXLC_IP67 product. e-con Systems provides the mating PoE injector along with the product.

Note: Kindly use the e-con Systems provided power injector or ensure your power adapter supports the IEEE 802.3af standard.

The M12 connector standard pin assignment is shown in the below figure.

Figure 4: M12 Connector Standard Pin Assignment

The pin-out details of the female X- coded M12 connector are listed in the below table.

Pin No	Signal Name	Description
1	MDI0+	Ethernet MDI Signal 0 pair +
2	MDI0-	Ethernet MDI Signal 0 pair -
3	MDI1+	Ethernet MDI Signal 1 pair +
4	MDI1-	Ethernet MDI Signal 1 pair -
5	MDI3+	Ethernet MDI Signal 3 pair +
6	MDI3-	Ethernet MDI Signal 3 pair -
7	MDI2-	Ethernet MDI Signal 2 pair -
8	MDI2+	Ethernet MDI Signal 2 pair +

Table 5: M12 Connectors Pin-out Details

5.2 Pin-out Details of M8 Connector

The M8 connector consists of trigger, strobe, and GPO lines. The GPO lines are Opto-Coupler isolated lines. Also, the M8 connector is used to provide power to the board when RouteCAM_P_CU25_CXLC_IP67 is used as non-PoE.

The female A-coded 8Pin M8 connector standard pin assignment is shown in the below figure.

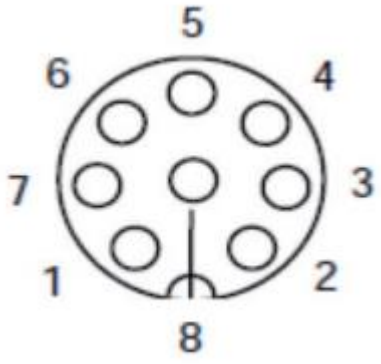

Figure 5: Female A Coded 8Pin M8 Connector Standard Pin Assignment

The pin-out details of female A-coded M8 connector are listed in the below table.

Pin No	Signal Name	Pin Type	Description
1	EXT-TRIGGER +	INPUT	Opto Coupler Isolated Trigger Input +
2	VCC_12P0	POWER	Optional external input 12V power (non-Isolated)
3	GPO_ISP +	OUTPUT	Opto Coupler Isolated GPO signal +
4	GROUND	POWER	Ground
5	CAM_STROBE +	OUTPUT	Opto Coupler Isolated Strobe output +
6	CAM_STROBE -	OUTPUT	Opto Coupler Isolated Strobe output -
7	EXT-TRIGGER -	INPUT	Opto Coupler Isolated Trigger Input -
8	GPO_ISP -	OUTPUT	Opto Coupler Isolated GPO signal -

Table 6: Female A Coded 8Pin M8 Connectors Pin-out Details

6 Electrical Specification

This electrical specification and recommended operating conditions of RouteCAM_P_CU25_CXLC_IP67 are listed in the below sections.

- Recommended Operating Condition
- Operating Temperature Range

6.1 Recommended Operating Condition

RouteCAM_P_CU25_CXLC_IP67 requires Power Sourcing Equipment (PSE) like PoE injectors or POE switches for normal operation. Whatever PSE is used, it's important to make sure it complies with IEEE 802.3af standard.

6.1.1 Power Consumption of RouteCAM_P_CU25_CXLC_IP67

RouteCAM_P_CU25_CXLC_IP67 gets the power from either through M12 (PoE) connector or M8 (Ethernet 12V power) connector. This camera generates all other

internal powers required by the sensor, ISP, and Ethernet PHY with the help of onboard power management integrated circuits (PMICs).

The overall power consumption of the RouteCAM_P_CU25_CXLC_IP67 camera is listed in the below table.

S. No	Resolution	Power Consumption (30 fps)	Power Consumption (60 fps)
1	320 x 240	2.74W	2.8W
2	640 x 480	2.8W	2.856W
3	1280 x 720	2.856W	2.912W
4	1920 x 1080	2.968W	3.08W

Table 7: Power Consumption Details

Note: These values are measured in the e-con Systems lab, and this can be used as a reference only. The current measurements are typical values and are subject to change for different camera boards under different conditions. However, these values can be taken as a reference for power estimation and power supply design.

6.2 Operating Temperature Range

The operating temperature range of the RouteCAM_P_CU25_CXLC_IP67 is listed in the below table.

Parameter Description	Temperature Range
Operating temperature range[1]	-30°C to 70°C

Table 8: Operating Temperature Range

[1]This is the maximum temperature range up to which the camera can be operated.

7 Mechanical Specifications

RouteCAM_P_CU25_CXLC_IP67 is an IP-rated aluminum enclosure. The overall product dimension is given in the below section.

7.1 RouteCAM_P_CU25_CXLC_IP67 Dimensions

The top and side views of RouteCAM_P_CU25_CXLC_IP67 with mechanical details are shown in the below figures.

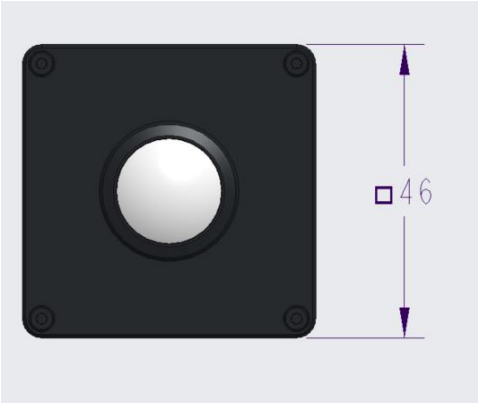

Figure 6: Top View of RouteCAM_P_CU25_CXLC_IP67

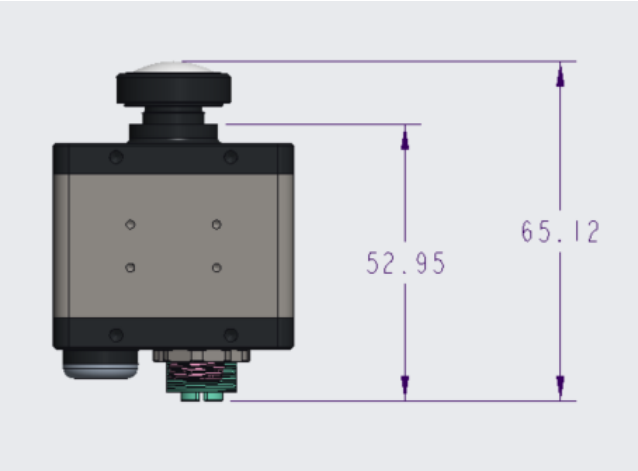

Figure 7: Side View of RouteCAM_P_CU25_CXLC_IP67

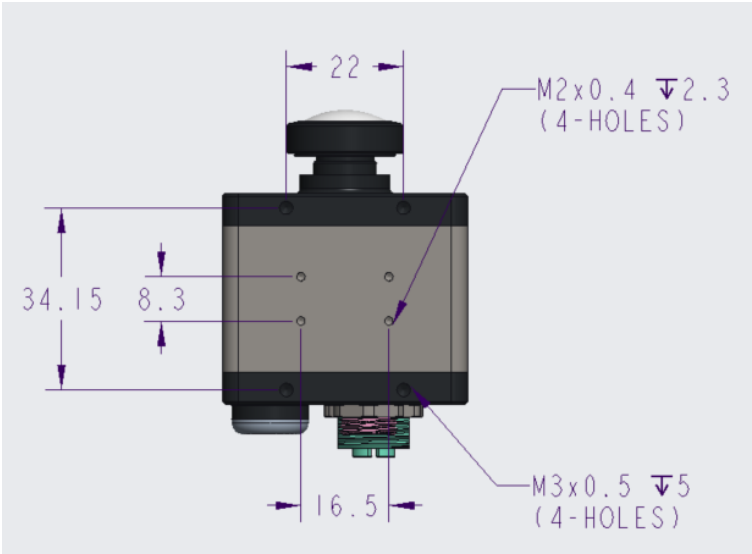

Figure 8: Side View of RouteCAM_P_CU25_CXLC_IP67 for Mounting Option

Note: All dimensions are in mm.

Revision History

Rev	Date	Description	Author
1.0	24-May-2023	Initial Draft	Camera Products Team
1.1	29-April-2024	Product Name Changed Product images Updated Power Consumption Details Updated	Camera Products Team
1.2	03-July-2024	M8 Connector details updated	Camera Products Team

Support

Contact Us

If you need any support on the RouteCAM_P_CU25_CXLC_IP67 product, please contact us using the Live Chat option available on our website - https://www.e-consystems.com/

Creating a Ticket

If you need to create a ticket for any type of issue, please visit the ticketing page on our website - https://www.e-consystems.com/create-ticket.asp

RMA

To know about our Return Material Authorization (RMA) policy, please visit the RMA Policy page on our website - https://www.e-consystems.com/RMA-Policy.asp

General Product Warranty Terms

To know about our General Product Warranty Terms, please visit the General Warranty Terms page on our website - https://www.e-consystems.com/warranty.asp