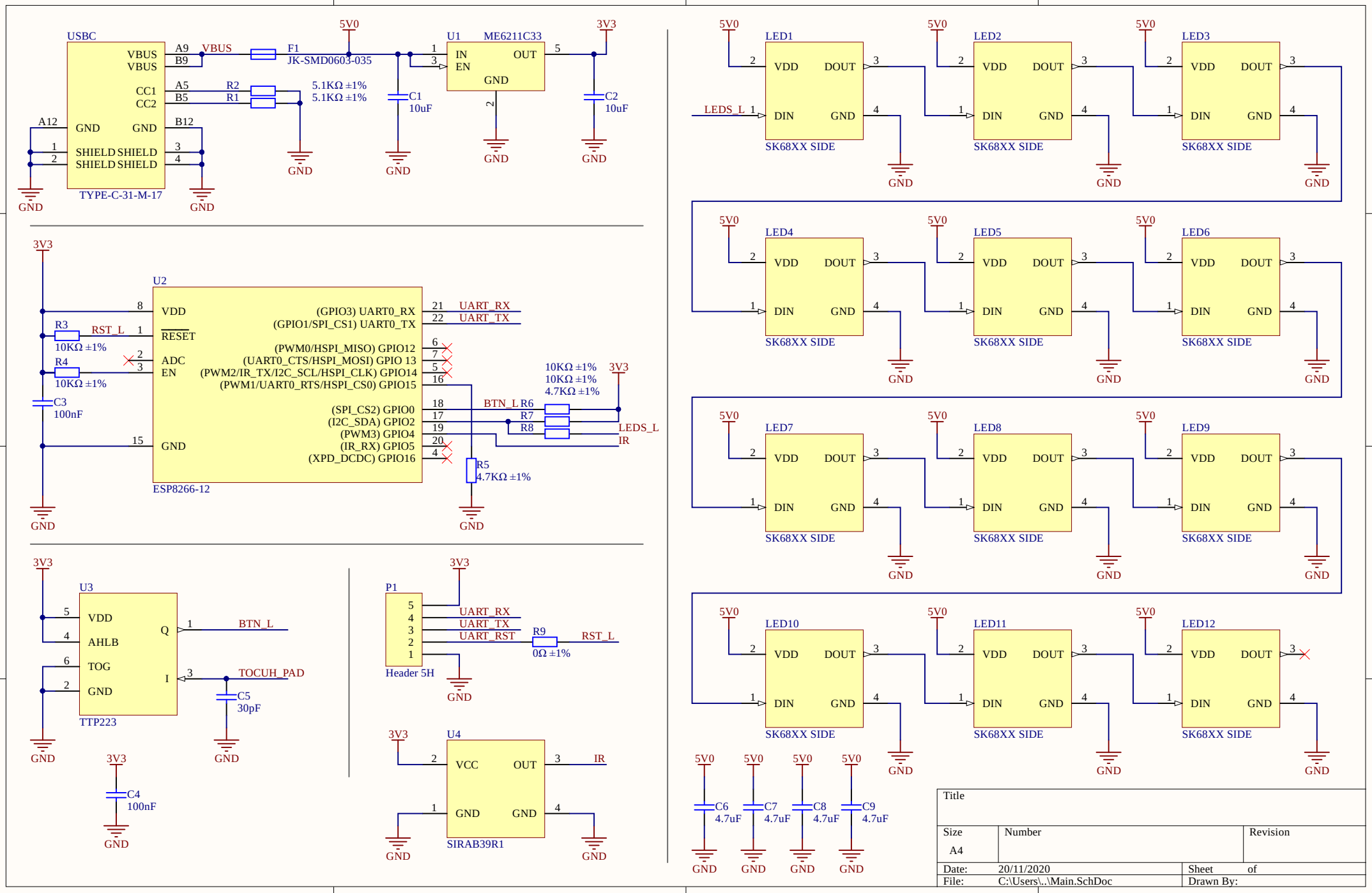
USBC
VBUS
VBUS
CC1
CC2
GND
GND
SHIELD SHIELD
SHIELD SHIELD
A9
B9
A5
B5
A12
B12
TYPE-C-31-M-17
F1
JK-SMD0603-035
R2
R1
5.1KΩ ±1%
5.1KΩ ±1%
5V0
3V3
U1
ME6211C33
IN
EN
OUT
GND
C1
10uF
C2
10uF
GND
U2
ESP8266-12
VDD
RESET
ADC
EN
GND
(GPIO3) UART0_RX
(GPIO1/SPI_CS1) UART0_TX
(PWM0/HSPI_MISO) GPIO12
(UART0_CTS/HSPI_MOSI) GPIO 13
(PWM2/IR_TX/I2C_SCL/HSPI_CLK) GPIO14
(PWM1/UART0_RTS/HSPI_CS0) GPIO15
(SPI_CS2) GPIO0
(I2C_SDA) GPIO2
(PWM3) GPIO4
(IR_RX) GPIO5
(XPD_DCDC) GPIO16
UART_RX
UART_TX
RST_L
R3
10KΩ ±1%
R4
10KΩ ±1%
C3
100nF
BTN_L
R6
R7
R8
10KΩ ±1%
10KΩ ±1%
4.7KΩ ±1%
LEDS_L
IR
R5
4.7KΩ ±1%
U3
TTP223
VDD
AHLB
TOG
GND
Q
I
BTN_L
TOCUH_PAD
C5
30pF
C4
100nF
P1
Header 5H
UART_RX
UART_TX
UART_RST
R9
0Ω ±1%
RST_L
U4
SIRAB39R1
VCC
OUT
GND
GND
IR
LED1
LED2
LED3
LED4
LED5
LED6
LED7
LED8
LED9
LED10
LED11
LED12
VDD
DOUT
DIN
GND
SK68XX SIDE
LEDS_L
C6
4.7uF
C7
4.7uF
C8
4.7uF
C9
4.7uF
Title
Size
A4
Number
Revision
Date: 20/11/2020
Sheet of
File: C:\Users\..\Main.SchDoc
Drawn By: