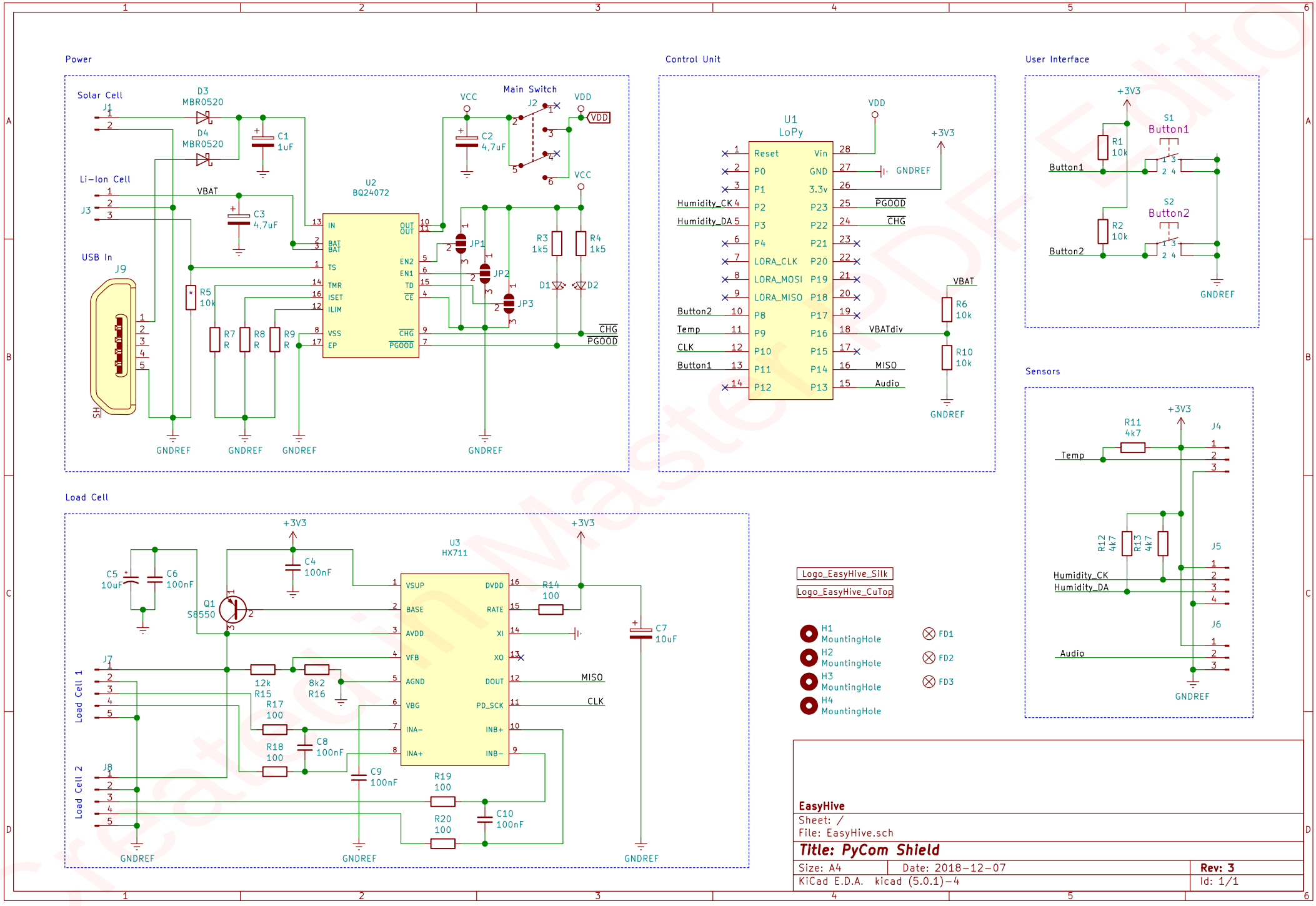
Power
Solar Cell
J1
D3
MBR0520
D4
MBR0520
C1
1uF
Li-Ion Cell
J3
VBAT
C3
4,7uF
USB In
J9
R5
10k
R7
R
R8
R
R9
R
U2
BQ24072
IN
BAT
BAT
TS
TMR
ISET
ILIM
VSS
EP
OUT
OUT
EN2
EN1
TD
CE
CHG
PGOOD
VCC
C2
4,7uF
Main Switch
J2
VDD
VDD
VCC
JP1
JP2
JP3
R3
1k5
R4
1k5
D1
D2
CHG
PGOOD
GNDREF
GNDREF
GNDREF
GNDREF
Control Unit
U1
LoPy
Reset
P0
P1
P2
P3
P4
LORA_CLK
LORA_MOSI
LORA_MISO
P8
P9
P10
P11
P12
Vin
GND
3.3v
P23
P22
P21
P20
P19
P18
P17
P16
P15
P14
P13
Humidity_CK
Humidity_DA
Button2
Temp
CLK
Button1
VDD
+3V3
GNDREF
PGOOD
CHG
VBATdiv
MISO
Audio
VBAT
R6
10k
R10
10k
GNDREF
User Interface
+3V3
S1
Button1
R1
10k
Button1
S2
Button2
R2
10k
Button2
GNDREF
Sensors
+3V3
R11
4k7
J4
Temp
R12
4k7
R13
4k7
J5
Humidity_CK
Humidity_DA
J6
Audio
GNDREF
Load Cell
+3V3
C5
10uF
C6
100nF
C4
100nF
Q1
S8550
U3
HX711
VSUP
BASE
AVDD
VFB
AGND
VBG
INA−
INA+
DVDD
RATE
XI
XO
DOUT
PD_SCK
INB+
INB−
R14
100
C7
10uF
MISO
CLK
J7
Load Cell 1
12k
R15
8k2
R16
R17
100
R18
100
C8
100nF
C9
100nF
J8
Load Cell 2
R19
100
R20
100
C10
100nF
GNDREF
GNDREF
GNDREF
Logo_EasyHive_Silk
Logo_EasyHive_CuTop
H1
MountingHole
H2
MountingHole
H3
MountingHole
H4
MountingHole
FD1
FD2
FD3
EasyHive
Sheet: /
File: EasyHive.sch
Title: PyCom Shield
Size: A4
Date: 2018-12-07
Rev: 3
KiCad E.D.A. kicad (5.0.1)-4
Id: 1/1