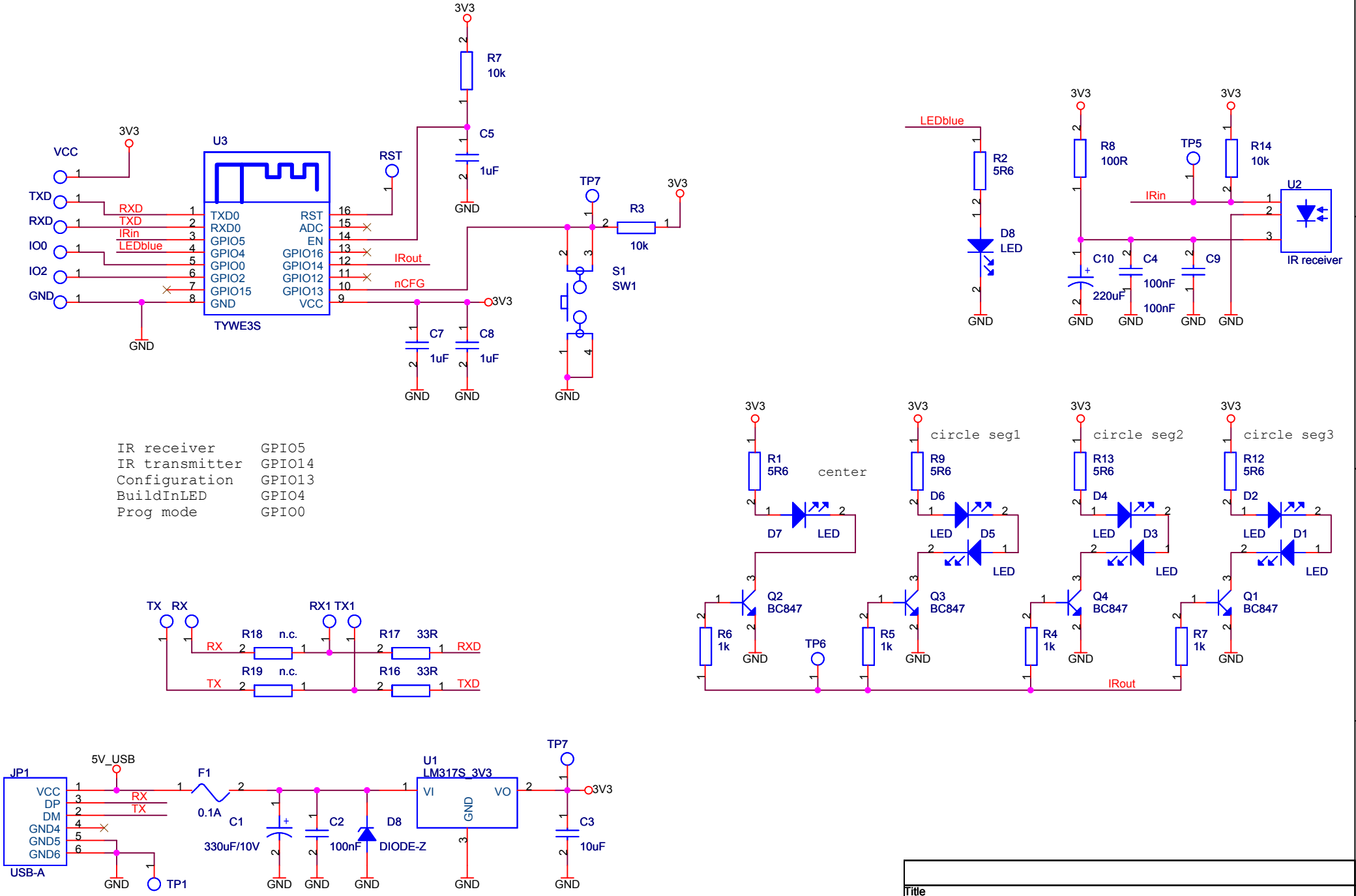

Title	Main URC-150
Size A4	Document Number URC-150 IR Bridge
Rev	1.0
Date:	Wednesday, September 18, 2019
Sheet	1 of 1